AMF® REECE

Better Ideas, Better Made

MODEL S-4000 TKF, LS Omron

TACKER AND LABEL SEWER

PARTS AND SERVICE MANUAL

MACHINE SERIAL No:

PART NUMBER 97.2441.4.001

1 / 2025

LIMITED WARRANTY ON NEW AMF REECE - CARS EQUIPMENT

Warranty provisions:

A ninety (90) day limited service labor warranty to correct defects in installation, workmanship, or material without charge for labor. This portion of the warranty applies to machines sold as “installed” only.

A one (1) year limited material warranty on major component parts to replace materials with defects. Any new part believed defective must be returned freight prepaid to AMF Reece - Cars for inspection. If, upon inspection, the part or material is determined to be defective, AMF Reece -Cars will replace it without charge to the customer for parts or material.

Service labor warranty period shall begin on the completed installation date. Material warranty shall begin on the date the equipment is shipped from AMF Reece - Cars.

Exclusions:

Excluded from both service labor warranty and material warranty are: (1) Consumable parts which would be normally considered replaceable in day-to-day operations. These include parts such as needles, knives, loopers and spreaders. (2) Normal adjustment and routine maintenance. This is the sole responsibility of the customer. (3) Cleaning and lubrication of equipment. (4) Parts found to be altered, broken or damaged due to neglect or improper installation or application. (5) Damage caused by the use of non-Genuine AMF Reece parts. (6) Shipping or delivery charges.

There is no service labor warranty for machines sold as “uninstalled”.

Equipment installed without the assistance of a certified technician (either an AMF Reece - Cars Employee, a Certified Contractor, or that of an Authorized Distributor) will have the limited material warranty only. Only the defective material will be covered. Any charges associated with the use of an AMF Reece - Cars Technician or that of a Distributor to replace the defective part will be the customer’s responsibility.

NO OTHER WARRANTY, EXPRESS OR IMPLIED, AS TO DESCRIPTION, QUALITY, MERCHANTABILITY AND FITNESS FOR A PARTICULAR PURPOSE, OR ANY OTHER MATTER IS GIVEN BY SELLER OR SELLER’S AGENT IN CONNECTION HEREWITH. UNDER NO CIRCUMSTANCES SHALL SELLER OR SELLER’S AGENT BE LIABLE FOR LOSS OF PROFITS OR ANY OTHER DIRECT OR INDIRECT COSTS, EXPENSES, LOSSES OR DAMAGES ARISING OUT OF DEFECTS IN OR FAILURE OF THE EQUIPMENT OR ANY PART THEREOF.

WHAT TO DO IF THERE IS A QUESTION REGARDING WARRANTY

If a machine is purchased through an authorized AMF Reece - Cars distributor, warranty questions should be first directed to that distributor. However, the satisfaction and goodwill of our customers are of primary concern to AMF Reece - Cars. In the event that a warranty matter is not handled to your satisfaction, please contact AMF Reece - Cars office:

Prostejov, Czech Republic
Phone: (+420) 725-088-560
E-mail: info@amfreece-cars.cz

Warranty Registration Card

(Please E-mail immediately after installation)

Note: All Warranty Claims void, unless Registration Card on file at AMF Reece - Cars HQ

Machine model number: (Deco 3000, S-4000, S-4002, EBS Mark II, etc.)

Manufacturer‘s serial or production number:

Installation Site Information:

Customer‘s Name:

Customer‘s Mailing Address:

Customer‘s Telephone Number:

Supervising Mechanic‘s or Technician‘s Name:

Signature of Supervising Technician:

AMF Reece - Cars Technician‘s Name:

AMF Reece - Cars Technician‘s Signature:

Type of garment produced at this location?

Average Daily Production Expected from this machine?
(number of buttonholes, jackets sewn, pants produced, buttons sewn, etc)

Any special requirements required at this location?

What other AMF Reece Machines are at this location?

How can we serve you better?

TABLE OF CONTENTS

A - INTRODUCTION
1. BASIC INFORMATION 1
2. SAFETY DEVICE AND LABEL 2
3. GENERAL MA CHINE PAR TS DESCRIPTION 3
4. SPECIFICATIONS 4
5. TABLE TYPE 5
6. INSTRUCTIONS FOR OPERATOR SAFETY AND MAINTENANCE 6
7. SPECIAL ACCESSORIES 7

B - MACHINE ASSEMBLY
1. CONTENT OF THE SHIPPING BOX 10
2. ACCESSORIES 10
3. POWER AND AIR CONNECTION 12
4. THREAD STAND INSTALLATION 14

C - PROPER APPLICATION
1. POWER UP / HOME POSITION 15
2. NEEDLE INSTALLATION 16
3. THREADING 17

D - MACHINE CONTROLS
1. PROGRESS OF SEWING 18
2. OPERATOR CONTROL PANEL PUSH BUTTONS AND SWITCHES 19
3. THE PROGRAMING MENU STITCHING HEAD 20
4. TESTS 22
5. PROGRAM VERSION 23
6. COUNTER RESET 23
7. PARAMETER CHECKLIST 24

E - MACHINE ADJUSTMENTS
1. MA CHINE HOME POSITION 25
2. THE MAIN CAM ADJUSTMENT 25
3. THE PRINCIPLES FOR THE MACHINE ADJUSTMENT 25
4. NEEDLE BAR 26
4.1. Needle bar crank position 26
4.2. The needle bar height adjustment 26
5. BITE 27
5.1. Bite cam 27
5.2. Bite width adjustment 28
5.3. Centering the bite over the throat plate 28
6. FEEDING 29
7. SLIP CLUTCH 30
8. STITCH DENSITY 30
9. LOOPER ADJUSTMENTS 31
10. THE CLAMP PLATE HOME POSITION 34
11. CLAMP PLATE TO THE CENTER OF THE THROAT PLATE ADJUSTMENT 35
12. THE SEWING LENGTH CHANGE 35
13. HEAD CLAMP FOOT ADJUSTMENT 36
13.1. Adjustment f or clamp height 36
13.2. Clamp foot to the center of the needle 36

Released: 01/2022
E-mail: info@amfreece-cars.cz

TABLE OF CONTENTS

14. THREAD DRAW-OFF 37
14.1. Adjustment of the Draw-Off Lever Position 37
14.2. The thread end adjustment 37
14.3. Locking the stitches 37
15. THREAD TENSION 38
15.1. Adjustment of the tension discs opening 38
15.2. The correct position of the tension mechanism 39
15.3. Regulation of the tension discs opening 39
16. THREAD TRIMMING 40
16.1. Trimming cylinder adjustment 40
16.2. The trimming hook adjustment 40
17. THE HOLD DOWN ADJUSTMENT 41
18. ADJUSTMENT OF THE STOPPING SENSOR POSITION 42
19. CHANGING THE DRIVE BELT 43
20. VOLTAGE GUARD 44

F - MACHINE MAINTENANCE
1. MACHINE CLEANING AND MAINTENANCE 45
2. PERIODIC MAINTENANCE 47
3. LUBRICATION DIAGRAM 48
4. MACHINE LUBRICATION 49
5. MACHINE DISPOSAL 51

G - PNEUMATIC DIAGRAM 52

H - ELECTRICAL DIAGRAM 53

A - INTRODUCTION

1. BASIC INFORMATION

The sewing machines S-4000 TKF and S-4000 LS are designed and produced to be very reliable. Important design goals have been achieved to provide a safe machine that is simple and inexpensive to maintain.
The patented rotary needle bar shaft drive, a major benefit, delivers longer needle bar life. The added benefits of lower vibration and less noise, translate into less operator fatigue.
Simple buttonhole length adjustment located outside the machine, eliminates the need for tilt back, while the quick stop repair function delivers safety and makes repairs easier.
A halogen work light is included with the S-4000 TKF and LS, to enhance operator safety and product quality.
Special electronic and mechanical safety devices protect the operator and the machine. There is a special power lock out switch that permits the machine to be locked in the off position, so that it cannot be cycledacci dentally. There is an emergency off switch. There is a low air pressure detector that will not permit machine operation if air pressure is dangerously low.
There are safety-warning labels on the machine in all areas that require special care. These must not be removed. If they are lost replace them immediately.
You are the most important safety equipment of all. Be sure you understand the proper operation of the machine. Never remove safety mechanisms or labels. We have made every effort to pro vi de the safest possible machine, but without complete knowledge of how this machine operates, and the use of proper care by the operator, this machine can cause serious injury or death. That i s why there are safety warnings throughout these instructions that carry one of these messages.

DANGER! Possible loss of life.

WARNING! Possible serious injury or machine damage.

NOTICE! Possible injury or machine damage.

We recommend that service workers from AMF Reece oversee the installation and initial training of your mechanics and operators.
The most effective safety precaution is a well-managed safety program. Be sure those who use this machine are properly trained. Never disable safety equipment.
Always wear safety goggles when operating or servicing the machine.

A - INTRODUCTION

2. SAFETY DEVICE AND LABEL

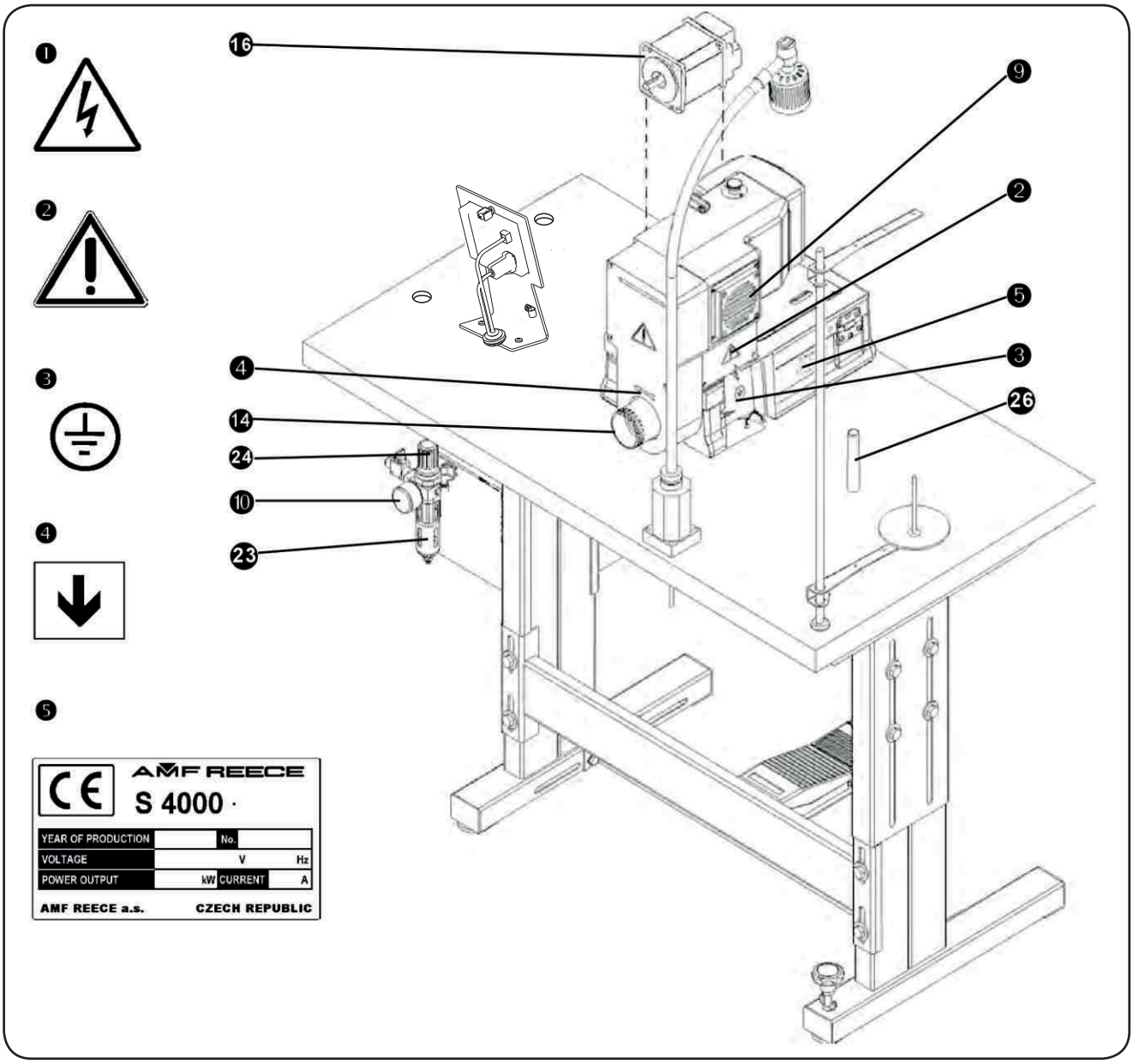

1. Warning
2. Covers removed, possible injury
3. Grounding
4. Rotational direction
5. Standard Label
6. Needle bar cover
7. Eye guard
8. Head cover
9. Fan cover
10. Manometer with pressure sensor
11. Machine head
12. Table Frame

Released: 01/2022
E-mail: info@amfreece-cars.cz

A - INTRODUCTION

3. GENERAL MA CHINE PAR TS DESCRIPTION

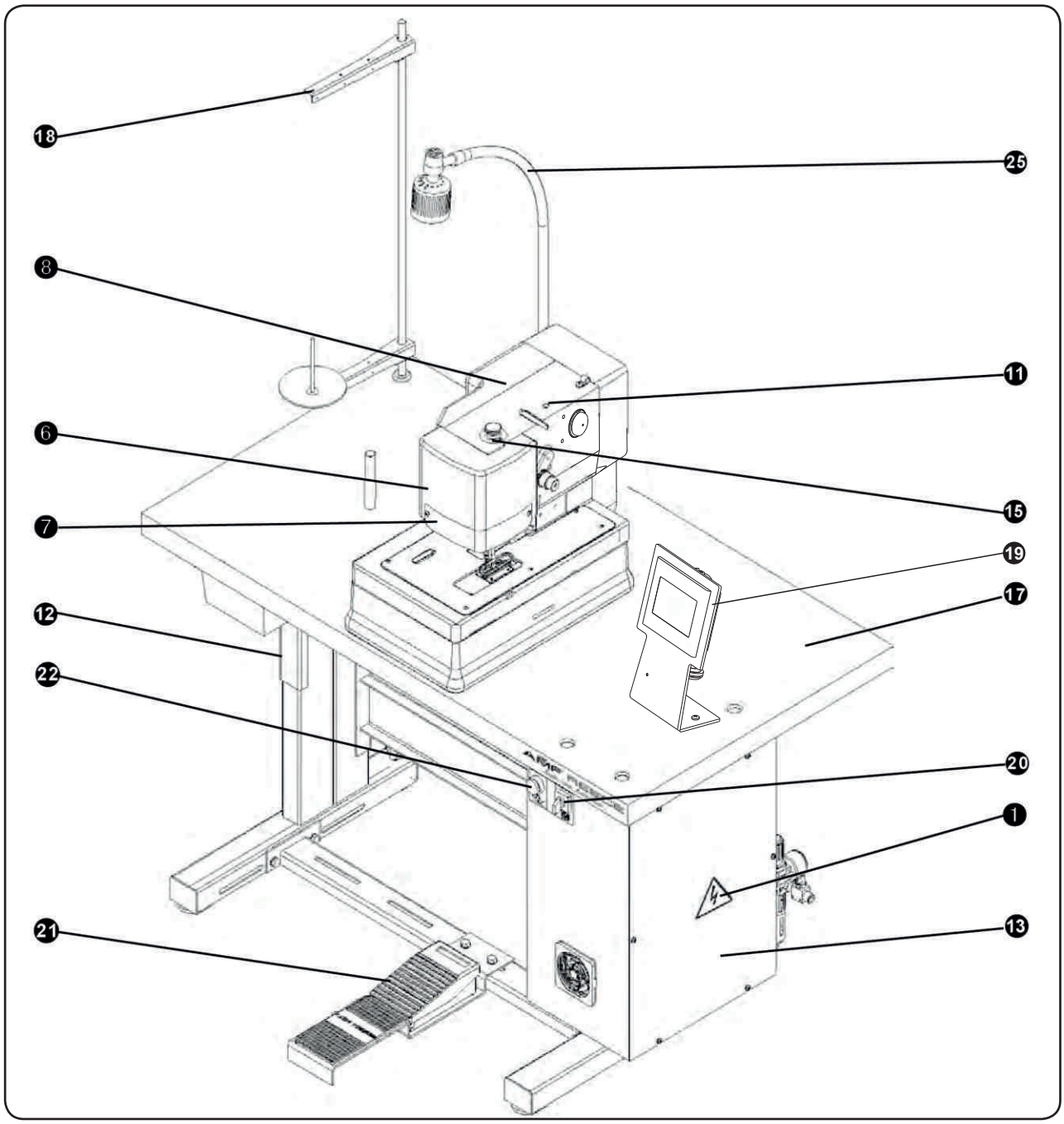

⓭ Control box
⓮ Hand wheel
⓯ Emergency Stop Button
⓰ Motor
⓱ Table Top
⓲ Thread Stand
⓳ Control Panel
⓴ Main switch
㉑ Foot pedal
㉒ Clamps Up/Down button
㉓ Air pressure regulator
㉔ Air pressure adjustment knob
㉕ Halogen Lamp
㉖ Rest Pin

A - INTRODUCTION

4. SPECIFICATIONS

Machine type		S 4000 TKF	S4000 LS
Description		electronic controlled machine for sewing the tacks on various clothes	electronic controlled machine for sewing the labels on various clothes
Sewing speed		1500-3800 stitches/min	
Stitch density		3-14 stitches/cm	
Machine clamp foot height		12.7 mm (1/2")	
Sewing length	one row	6-40 mm	
	two rows	9-43 mm	
Maximum work thickness		to 4 mm (5/32")	
Bite range		1,7 - 3,0 mm	
Recommended thread		thread size 80, 100, 120 (Tex 40-60)	
Needle system		Needle 750 SC 90/14 (it is possible to order 80/12 and 70/10)	
Lubrication		semi-automatic	
Operating Conditions		according to IEC 364-3, IEC 364-5-51 temperature from +5℃ to 40℃, relative air humidity from 30 to 80 %	
Air pressure		0.55 MPa (80 PSI)	
Machine db level		Laeg = 74dB; LWA = 87dB; LpC, peak = 103dB	
Machine head dimension		340 mm (height) x 470 (width) x 250 mm (length)	
Machine head length		62 kg	
Table dimension		700 mm (height) x 600 mm (width) x 1100 mm (length)	
Table types		Parallel, Crosswise, Universal	
Electrical Requirements		1NPE~60Hz 230V/TN-S (according to EN 60204-1) 1NPE~50Hz 230V/TN-S (according to EN 60204-1)	
Line Circuit Breaker		10A charakteristic C (according to EN 60947-2) 16A charakteristic B (according to EN 60947-2)	

Released: 01/2022
E-mail: info@amfreece-cars.cz

A - INTRODUCTION

5. TABLE TYPE

1. Parallel
2. Crosswise
3. Crosswise embedded
4. Universal - possible adjustable: parallel/crosswise

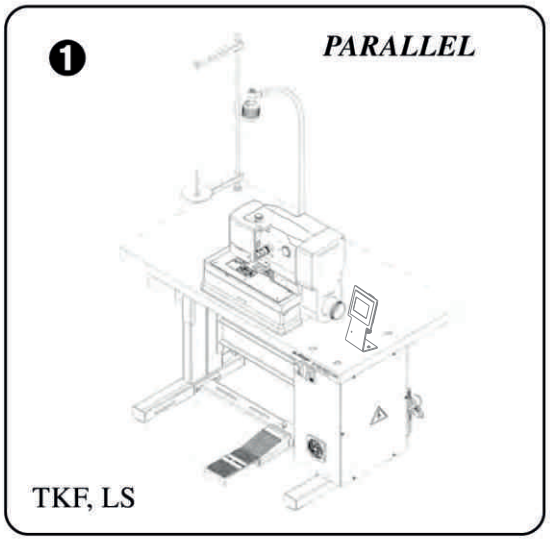

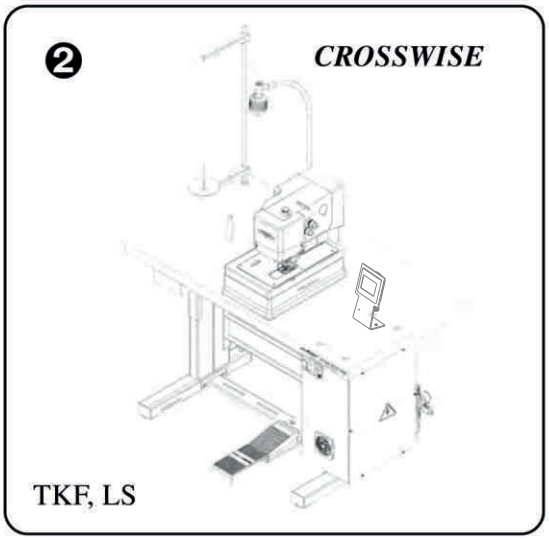

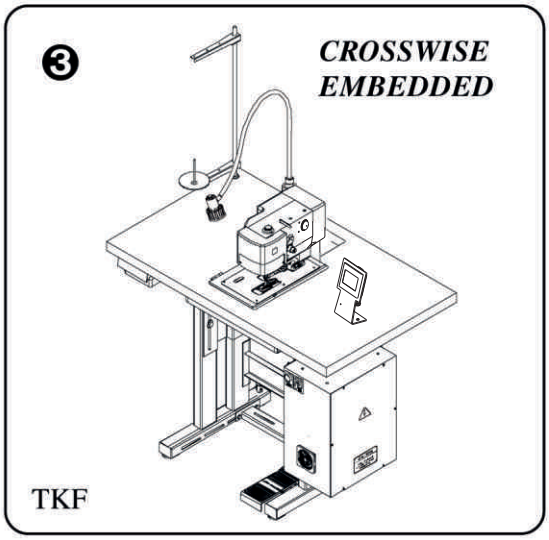

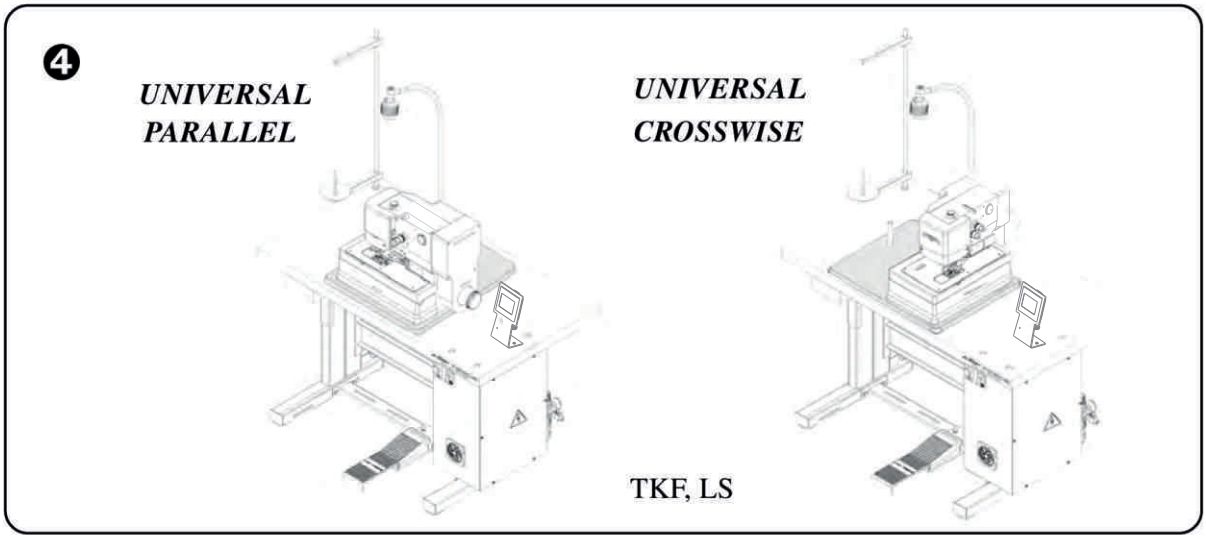

A - INTRODUCTION

6. INSTRUCTIONS FOR OPERATOR SAFETY AND MAINTENANCE

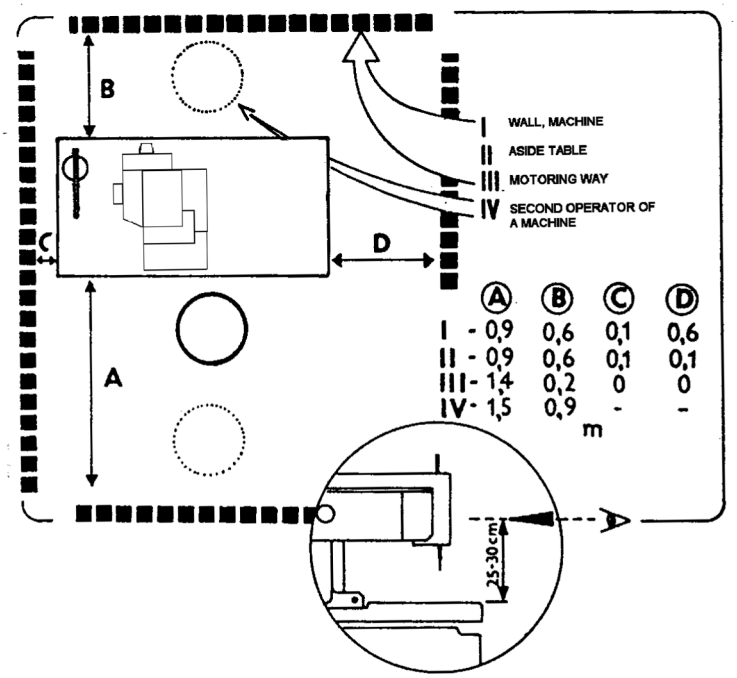

When installing the machine we recommend the minimum clearances noted above around the machine.
Read all of the instructions that follow. DO NOT PUT THE MACHINE INTO OPERATION UNTIL YOU ARE COMPLETELY FAMILIAR WITH ALL INSTALLATION AND OPERATING INSTRUCTIONS.

DANGER!
- Before connecting the machine to the power supply, be positive that all safety covers are correctly installed.
- Always engage the power lockout switch, or disconnect the main power supply, before removing any safety covers.

WARNING!
- Locate the Emergency Stop button. Be sure you know how to use it.
- Be sure that you have a reliable and uniform power supply.
- Be sure that all electrical supply lines are in good condition and have no signs of damage to avoid electrical shock.
- If any covers become damaged, they must be repaired or replaced immediately.
- Do not touch moving parts of the machine while it is operating.
- Keep clear of the needle.
- Always switch off the main power before changing the needle.
- Before cleaning the machine or performing service to the machine, engage the power lock out switch or disconnect the main power supply.
- When the machine is not in use engage the power lock out switch or disconnect the main power supply.
- When this machine is used incorrectly, or is incorrectly maintained, it can be dangerous.

Everyone who uses this machine, or maintains this machine, must be completely familiar with this manual.

Released: 01/2022
E-mail: info@amfreece-cars.cz

A - INTRODUCTION

CAUTION!

- Perform all regular service as described in this manual.
- If there is any problem with the power supply, turn off the main power switch.
- Do not remove, paint over, damage or in any way change safety labels. If a safety label cannot be easily read, replace it.
- Long hair and loose clothing may be dangerous near any machinery. Always contain long hair and avoid loose clothing, so that it cannot be caught by machinery and cause injury .
- Never use this machine while under the influence of drugs or alcohol.
- If anything seems to be operating incorrectly in the machine call for maintenance assistance immediately.
- Be sure that there is adequate light for safe operation. A normal minimum light level is 750 lux.

7. SPECIAL ACCESSORIES

- machine device, which is not included in the standard equipment of the machine and can be ordered by the customer.

Light

- customer can order - no. 12.0008.4.403
- connection according to chart (terminal connectors X0; cable clamps 3,4)

Warning: When turning on the light on the machine, disconnect the machine from the power supply.

- in case, you do not want to interfere into the machine wiring, it is possible to order the work light LBH-T65, order no. 12.0008.4.875, which contains its own clip fork the table and supply conductor with foprk (plug) CEE7 for connection to the power supply ~ 230 V.

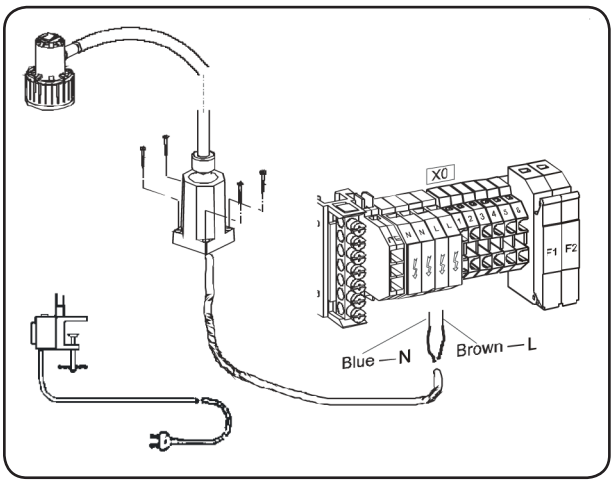

Needle s750 SC 80/12 , 70/10

- the manufacturer recommends to use these needles when sewing thin material
- part numbers 02.0750.2.100 (80/12), 02.0750.2.109 (70/10)

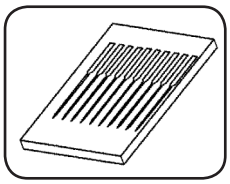

A - INTRODUCTION

Connector Ø8 ❶

- order it if the connecting tube has the inner diameter 8 mm.
  The connector Ø10 is supplied with the machine.
- part number is 12.0008.3.607

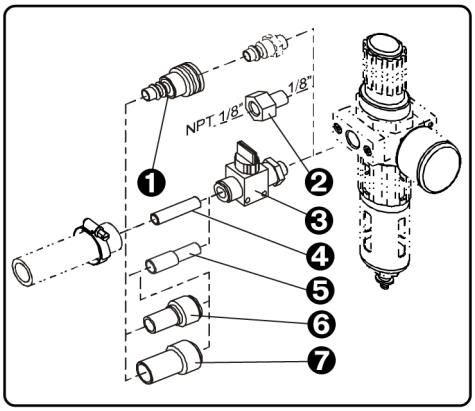

Pneumatic Adapter ❷

- order it if using 1/8“ NPT
- part number 12.0008.3.081

Hand valve ❸

- to dissipate any air from the machine, order it (air circuit is bled). It is necessary to order the connectors (see below) to the hand valve for connection to the air tubes.
- part number 12.0008.3.463

Connectors

❹ 12.0008.3.464 Ø8 for connection to the tube with inner Ø8 mm
❺ 12.0008.3.466 Ø10 for connection to the tube with inner Ø10 mm
❻ 12.0008.3.467 Ø12 for connection to the tube with inner Ø12 mm*
❼ 12.0008.3.465 Ø16 for connection to the tube with inner Ø16 mm*
* To connect the tube with inner Ø12 and Ø16, it is also necessary to order Ø10

Needle guard and clamp foot 3/8“ a 3/4“ kit (for machine S-4000 TKF only)

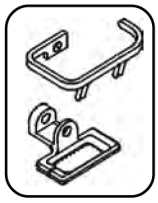

- to sew in range 6,3 - 9,5 mm, use needle guard 3/8“ and clamp foot 3/8“
- to sew in range 9,5 - 19 mm, use needle guard 3/4“ and clamp foot 3/4“
- ordering numbers: needle guard 3/8“ - 20.0767.1.002
  clamp foot 3/8“ - 20.0650.0.240
  needle guard 3/4“ - 20.0767.1.003
  clamp foot 3/4“ - 20.0650.0.340

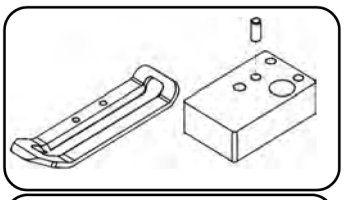

Clamp foot assembly (for machine S-4000 LS only)

- to sew maxi mum length 43 mm, order it
- part number 24.9920.9.989

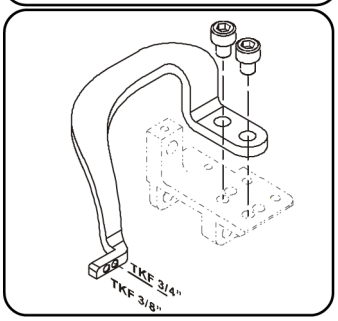

Clamping Arm (for S-4000 TKF)

- necessary to order, easier insertion of work
- for clamps 3/4“ a 3/8“ (order no. 24.3208.0.000)

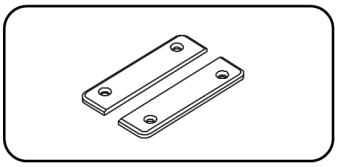

Smooth clamp washer

- necessary to order, for sewing the fine material (order no. 20.0649.1.042)

Released: 01/2022
E-mail: info@amfreece-cars.cz

A - INTRODUCTION

Clamping-bite 1,5 - 2 mm

- possible to order, for TKF
  (order no. 03.5524.0.032)

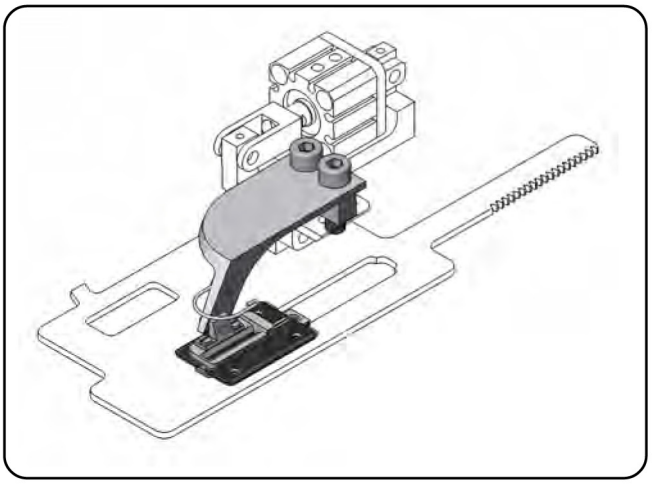

Clamping foot-bite 4 mm

- possible to order, for TKF
  24.3211.0.000 Clamp foot 1 1/2
  24.3212.0.000 Clamp foot 3/4
  24.3213.0.000 Clamp foot 3/8

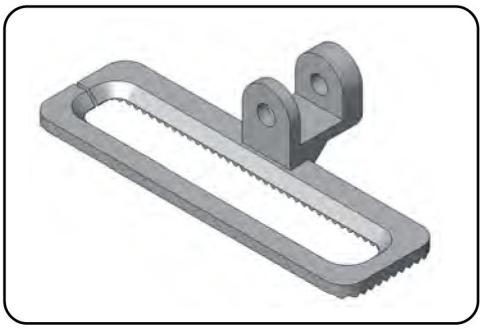

Throat plate-bite 4 mm

- possible to order, for TKF
  24.3214.0.000

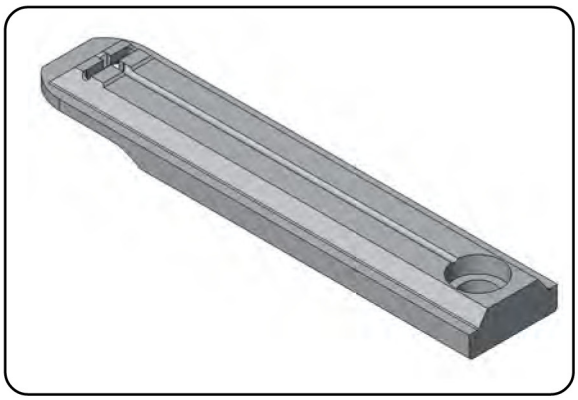

Clamp mat-bite 4 mm

- possible to order, for TKF
  24.3220.0.000

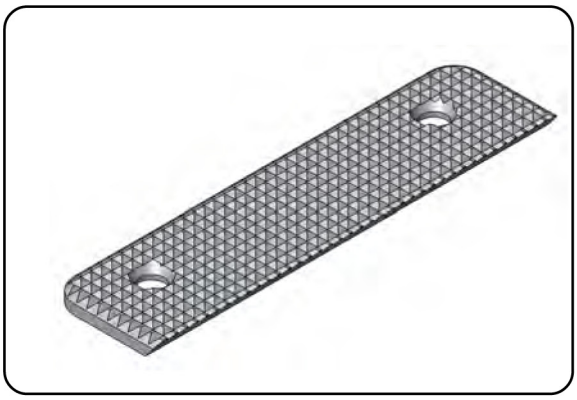

B - MACHINE INSTALLATION

1. CONTENT OF THE SHIPPING BOX

1. The shipment contains one box.
2. There is a carton with accessories, service manual with parts section and thread stand ❶ in the box.
3. During unpacking the shipment, follow the labels which are on a cover.

CAUTION: If the machine or crate was damaged in shipment inform the freight company immediately. Check the contents of the crate immediately and report any damage or missing items to the manufacturer immediately, late reports will not be considered!

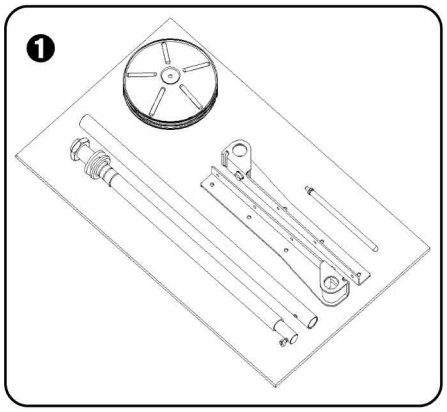

2. ACCESSORIES

A package of accessories is supplied with the machine, please refer to page 3-48 for detailed descriptions. The height of the working area is normaly set in range 830 - 850 mm from the manufacturer (and embedded) S-4000 TKF is in range 780 — 800 mm.. When using this height of the working area, recommended height of the operator seat is in range 430 - 460 mm. The height of the table can be set in range 670 - 880 mm by screws ❸.

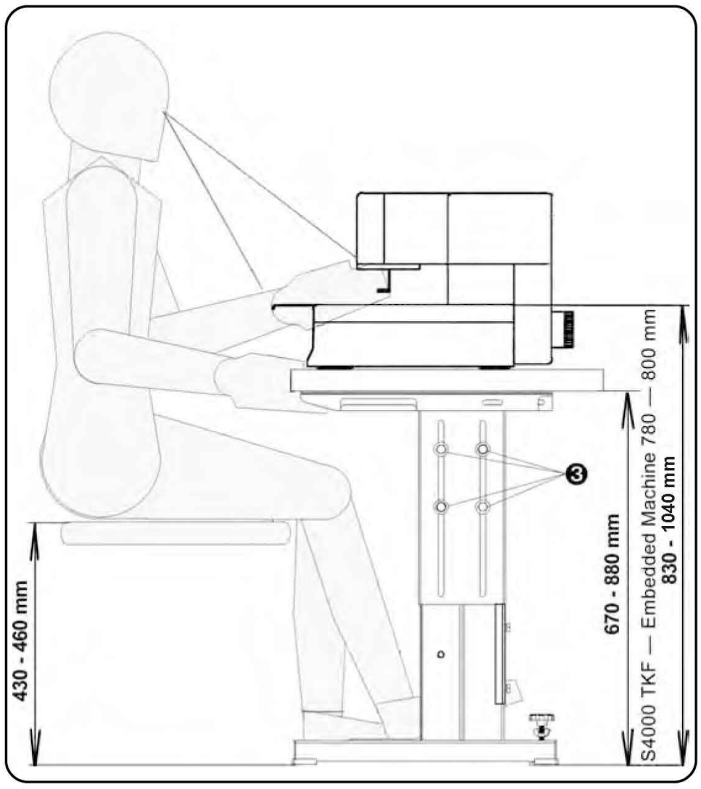

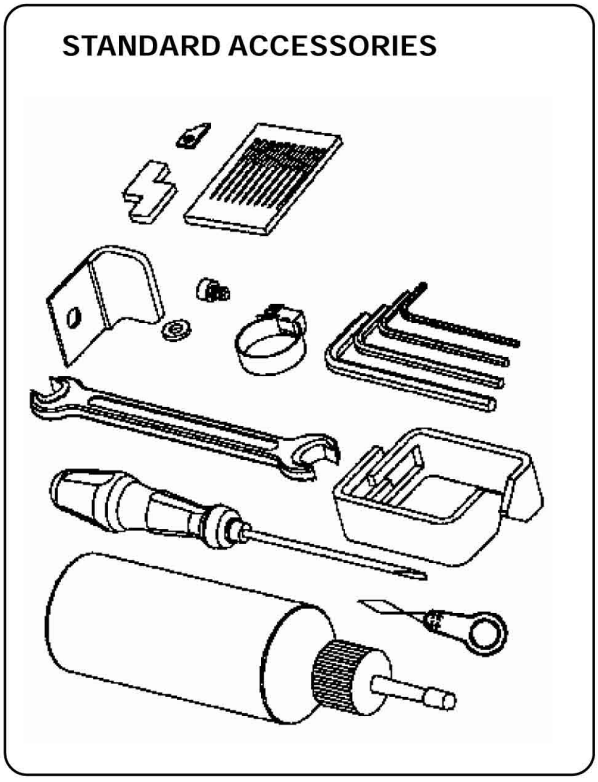

Released: 01/2022
E-mail: info@amfreece-cars.cz

B - MACHINE INSTALLATION

Remove the shipping strap ❷ after unpacking the machine, the use of this strap is recommended anytime the machine is transported.
(This is valid for all types of tables - parallel, crosswise, universal).

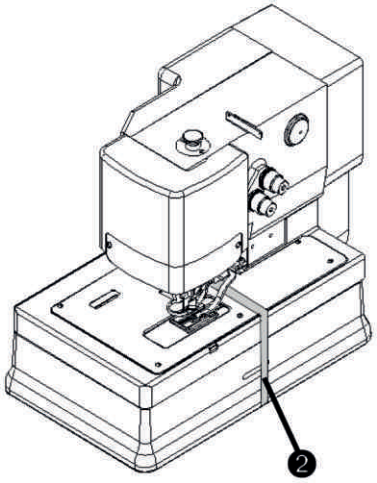

If a customer has ordered the ***universal table*** , and requires to change the parallel table to the crosswise table,
it is necessary to remove 2 locking screws ❹ and turn the machine head to the required position. It is also possible to change the display position.

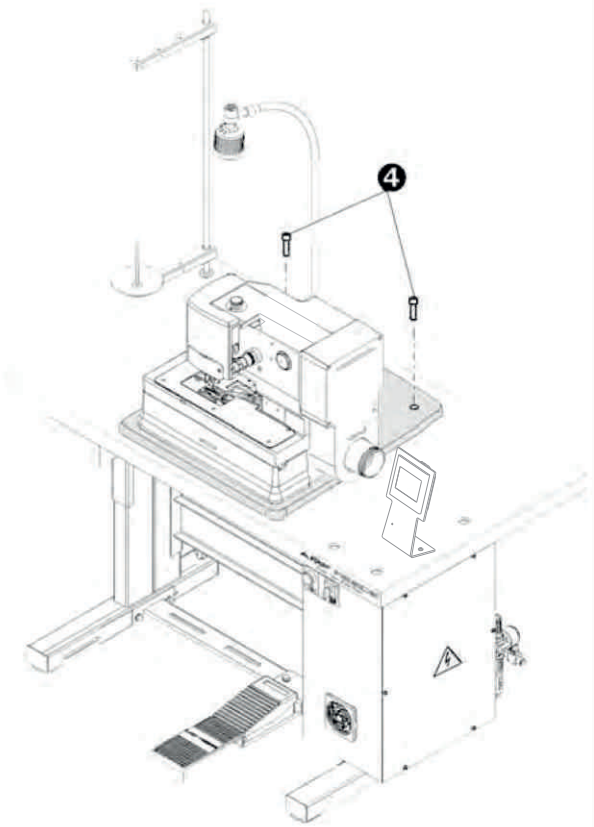

B - MACHINE INSTALLATION

3. POWER AND AIR CONNECTION

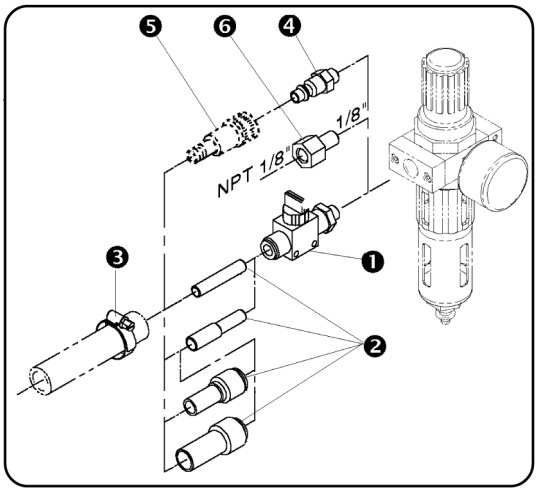

1. The machine is equipped with a quick coupler ❹ required with connector ❻ for inner Ø of the tube 10.
The connector for inner Ø of the tube 8 is not supplied with the machine, a customer has to order it. The manufacturer recommends to use connector ❻ for customers who requires to connect the tube with connector NPT .
If a customer needs to use a shut off valve ❶, which allows fast releasing of the air from the circuit, he must order it.
A variety of connectors ❷ can be used separately or in combination to adapt to the available input supply hose. It depends on type of the tube which is used by a customer.
These connectors are not included in the accessories. A tubing clamp ❸ is provided.

NOTE: Parts ❶, ❷, ❺, ❻ are included in Extra Parts - see 3-47.

2. After air connection check the set air pressure on the dial of the regulator. It should be in range 0.5 - 0.6 MPa . The green pointer ❼ indicates the lowest working air pressure 0.5 MPa, which is set from the manufacturer on the regulator ❽. If the air pressure is lower than 0.5 MPa after connecting the machine to the power supply „Low Pressure“ message appears on the control panel display. To adjust the working pressure, loosen the regulator cap lock ❿ and turn the regulator cap clockwise to increase the pressure. Push the regulator cap ❿ down. The LED ⓫ is for setting the minimal operation air pressure.

3. Power supply must be 208 to 230 volts 1 phase, 50 or 60 hertz. Receptacle plug must meet requirements of IEC standard 364-4-41, its circuit breaker must be minimal 10A with characteristic C according to the EN 60947-2 (or 16A with characteristic B). No other devices must not be connected to the circuit breaker of the socker. The hand wheel ⓬ must turn counter clockwise.
The machine is equipped with a filters which contain capacitors which generate an high frequency leakage current. In order to prevent nuisance tripping, residual current protection device must be protected against these high frequency currents: this i s the case for industri al residual current device (example „S“ type).

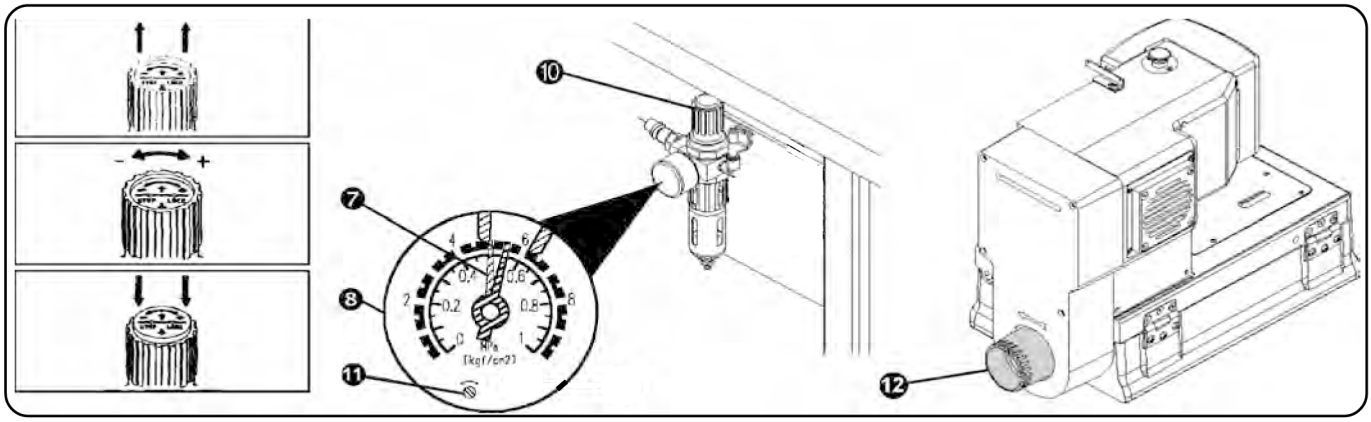

Released: 01/2022
E-mail: info@amfreece-cars.cz

B - MACHINE INSTALLATION

Head Pneumatic

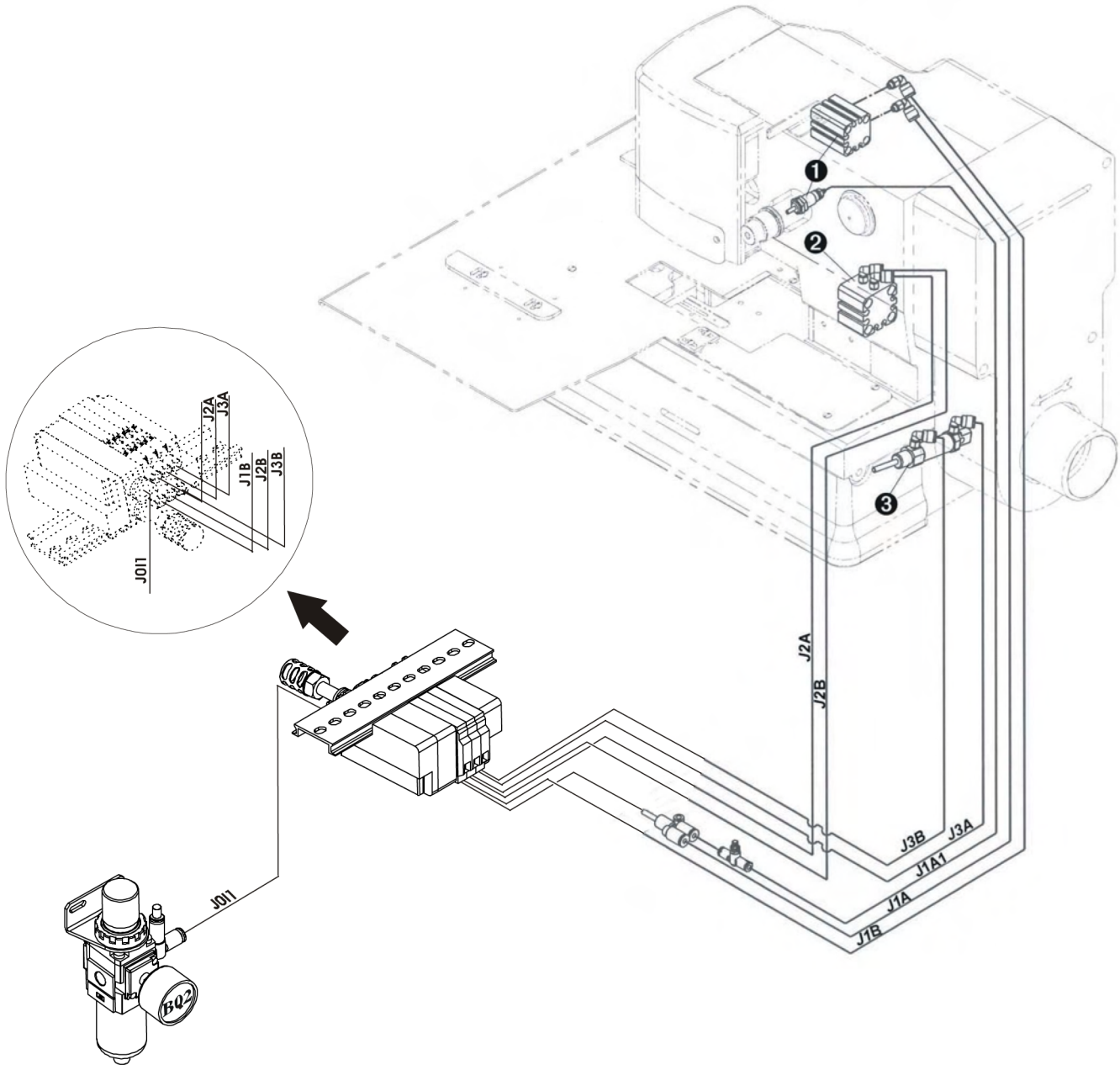

❶ - thread draw-off, tension release
❷ - clamp feet
❸ - thread trim
J0I1 - air input
BQ2 - regulator with air pressure switch

Tubes identification

J X X X
- air distribution
- 0, 1, 2 — X => distribution from a regulator
- 0, 1, 2 — X pneumatic cylinder identification (first number is 0 but is not marked)
- A ; B; C

B - MACHINE INSTALLATION

4. THREAD STAND INSTALLATION

1. Put the thread stand together according to the drawing.

2. Position of the locking ring ❶ allows assembly of the thread stand for various thickness of the table top. Threaded end of the post ❻ must not extend more that 1 mm (1/32) through the locking nut ❺.

3. Insert the washer ❷ and the post into the hole provided in the right rear of the table top ❸. Insert the washer ❹ and tighten the nut ❺.

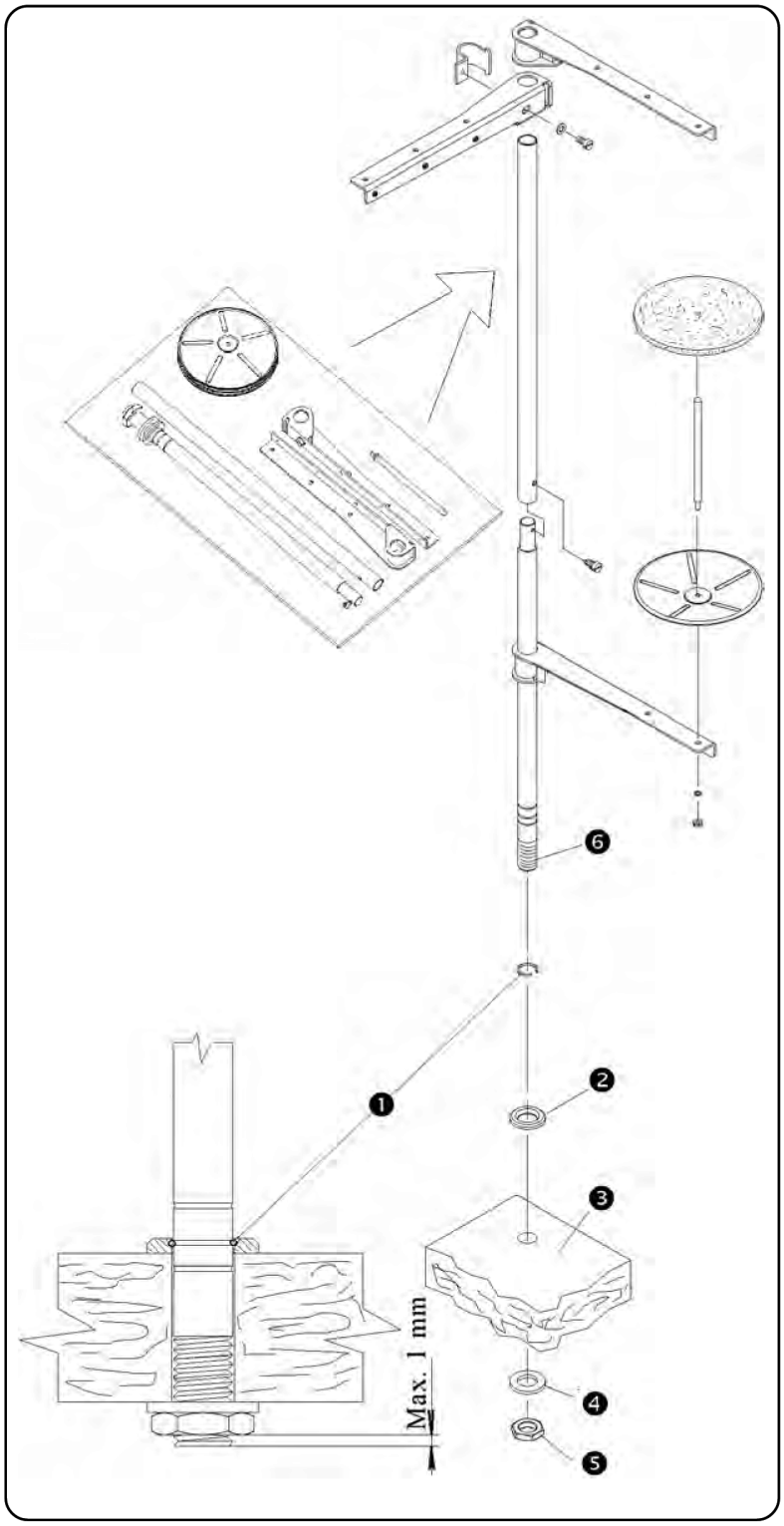

Released: 01/2022
E-mail: info@amfreece-cars.cz

C - PROPER APPLICATION

1. POWER UP / HOME POSITION

1. Turn the main power switch on ❶ by turning clockwise to the I position.

2. The machine is ready for operation when the control panel display lights, the Ready message appears on the display and the green LED lights on display.

Ready

The machine must be in the home position before starting to sew (to be certain, press the foot pedal and sew one dummy buttonhole).

3. It is possible to instal power voltage control (Voltage monitoring relay HRN 35) in to the machine control system. This power voltage control cautions a machine operator if the supply voltage is not in the required range (185V - 255V) and the machine could be damaged - see section E19.

Note: The power voltage guard is installed in the machine only if a customer has ordered it with a machine.

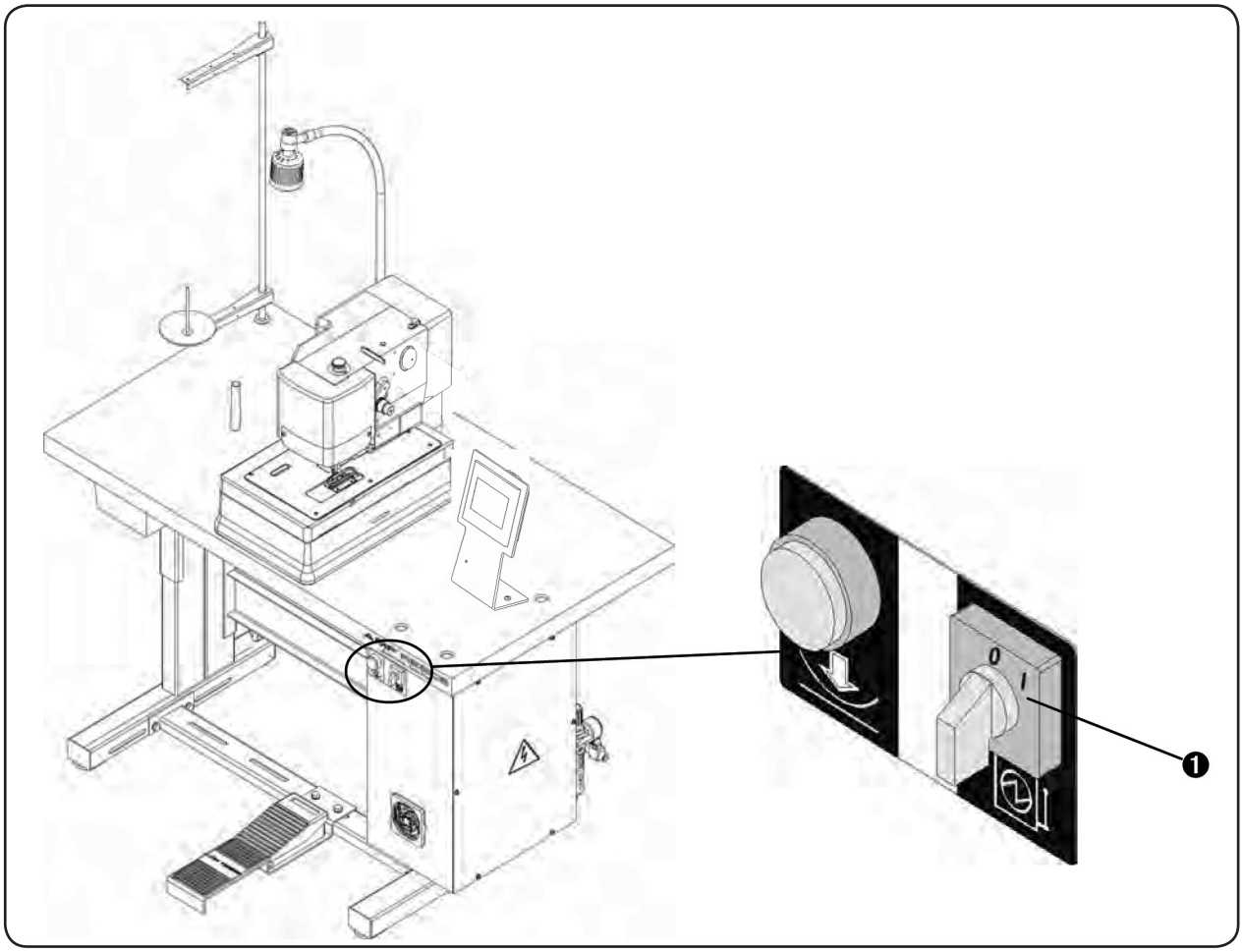

C - PROPER APPLICATION

2. NEEDLE INSTALLATION

WARNING! Before performing this adjustment, switch the main machine power off to prevent accidental starting of the machine. Disconnect the air supply and dissipate any stored energy. Use needles ordering number 02.0750.2.110 (750SC 90/14) only - see accessories. It is also possible to use needles ordering number 02.0750.2.100 (750 SC 80/12) for sewing the thin materials - these needles are not included in the standard machine equipment.

1. Using the screwdriver push the latch ❶ and open the needle bar cover ❷.

Note: The accessories contain the lever ❺ (ordering number 22.0213.0.000) and screw (ordering number 08.6000.4.005) with washer (08.6850.4.000) ❻, which is possible to fit to the latch. It allows opening of the cover without using the tool.

2. Loosen the screw ❸ and remove the needle.

3. Insert the new needle so that the long thread groove ❹ is in the rear and the spot for the clamping screw ❸ is in line. Do not install a bent or broken needle. Roll the needle on a flat surface to check for straightness.

4. Tighten the screw ❸ well.

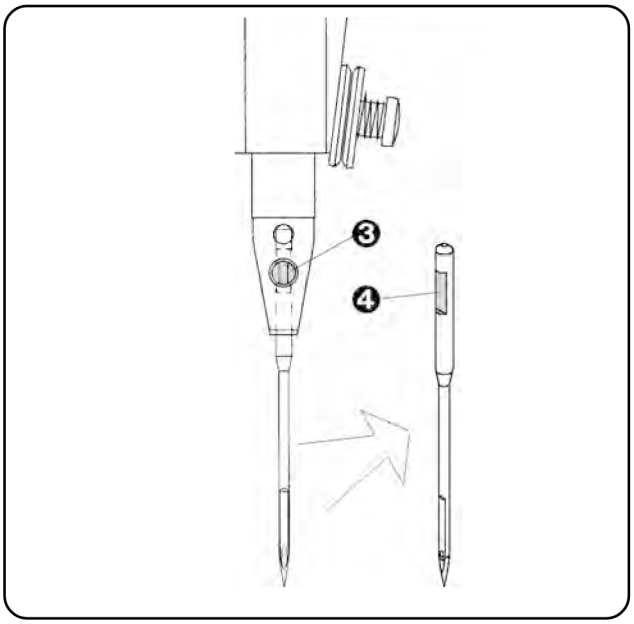

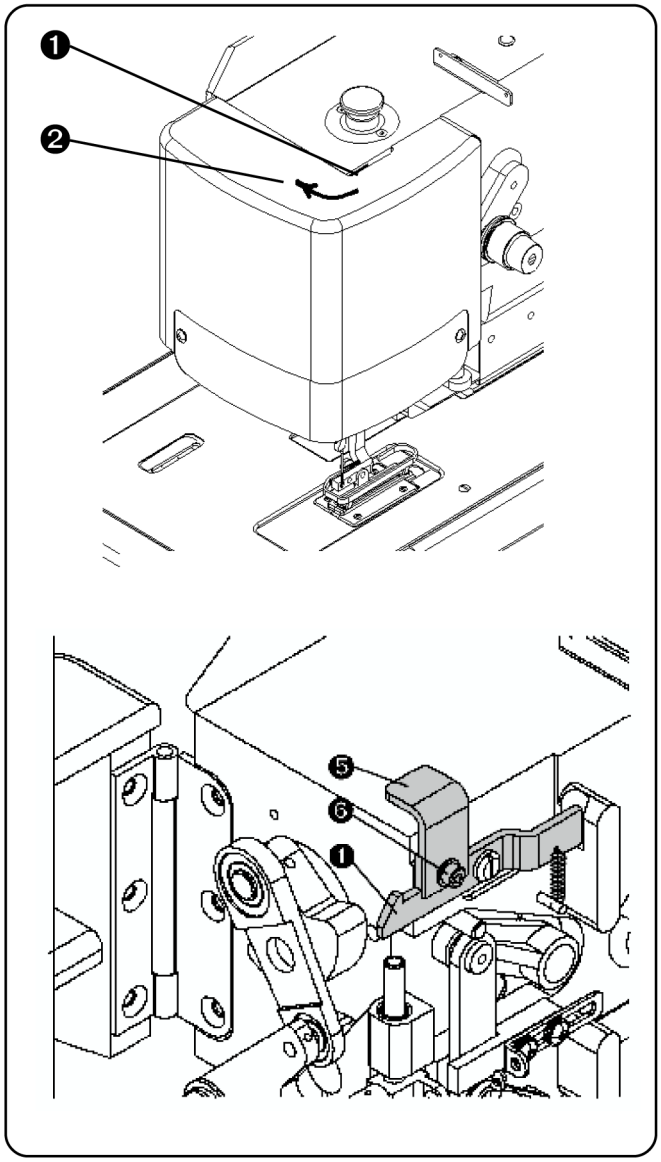

Released: 01/2022
E-mail: info@amfreece-cars.cz

C - PROPER APPLICATION

3. THREADING

WARNING! Switch the main machine power off to prevent accidental starting of the machine. Disconnect the air supply and dissipate any stored energy.

When threading, see the pictures below. Change the thread tension by nut ❶ according to the sewing conditions. To increase the thread draw off (for example sewing on the thin fabrics) there is an arm ❷ installed on the thread draw off lever.

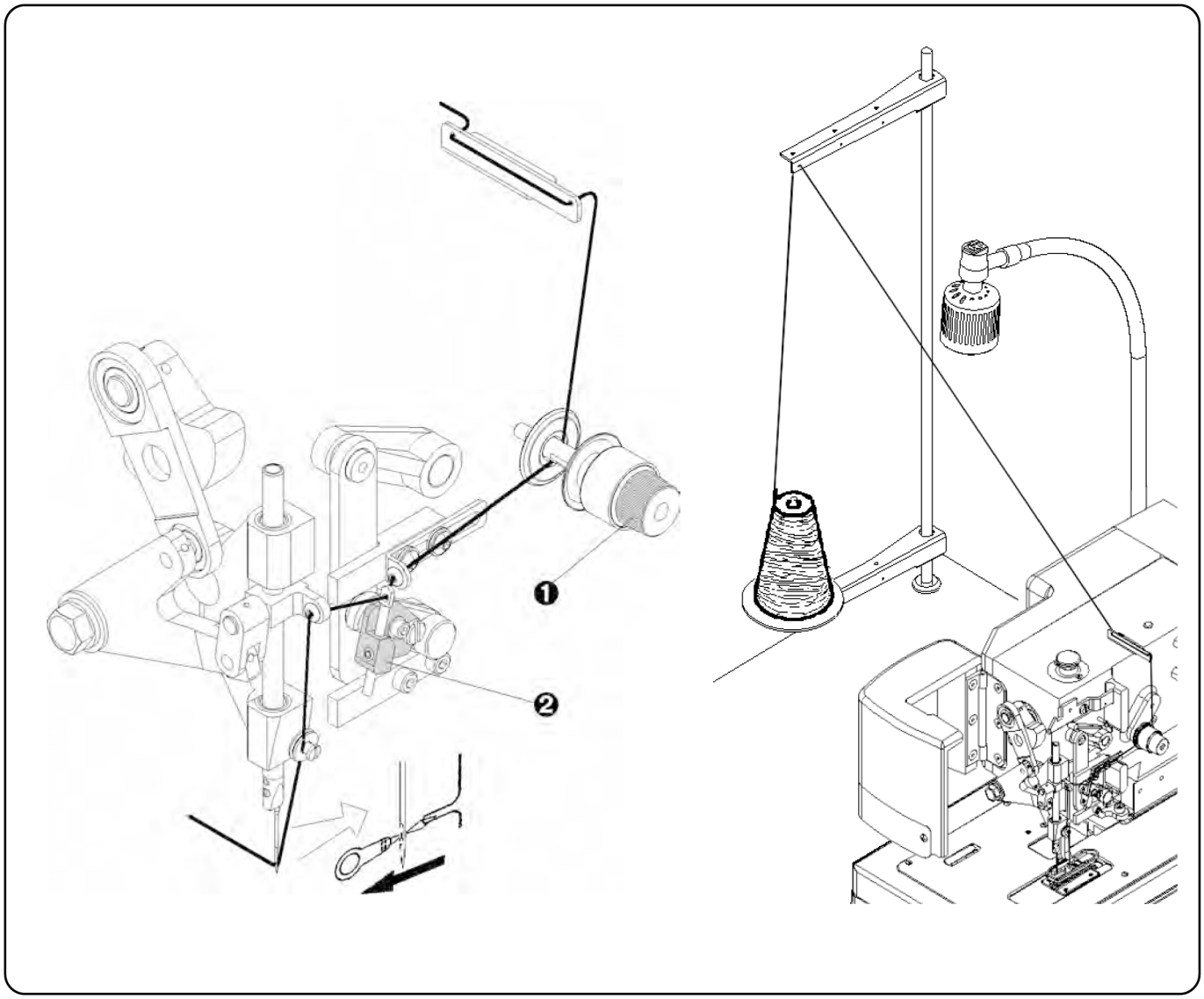

The appearance and quality of the buttonhole may be affected by one or more of the following:

- clamping of the material
- bartack quality
- thread tension
- type of thread (size, etc.)
- sewing width
- sewn material (thickness, density)

D - MACHINE CONTROLS

1. PROGRESS OF SEWING

1. Bring the machine to the home position according to the section C1.

2. Be certain that the machine is threaded correctly according to the section C3 and insert the work under the clamp feet.

3. When the foot pedal ❶ is pressed to the first position, the work is clamped by the clamp feet.
(Releasing the foot pedal will rise the clamp feet).

Note: It is possible to set in the program the machine start on first pedal position.

4. When the foot pedal is pressed to its second position, the sewing is started. After finishing the sewing and trimming the thread, the machine returns to the home position and the clamp feet rise.

5. When the clamp feet are up, it is possible to move the sewn work for next sewing.

6. Machine can be stopped in any place of the cycle by pressing the Emergency Stop button ❷ which is placed on the machine head. After releasing the Emergency Stop button, pressing the button and pressing the foot pedal, the machine finishes the sewing.

7. If the foot pedal ❶ is pressed before finishing the sewing, the clamp feet will not rise and the machine will sew four cycles instead of two - this is possible to set in program.

8. When the work is done, switch the machine off by the ❸ button.

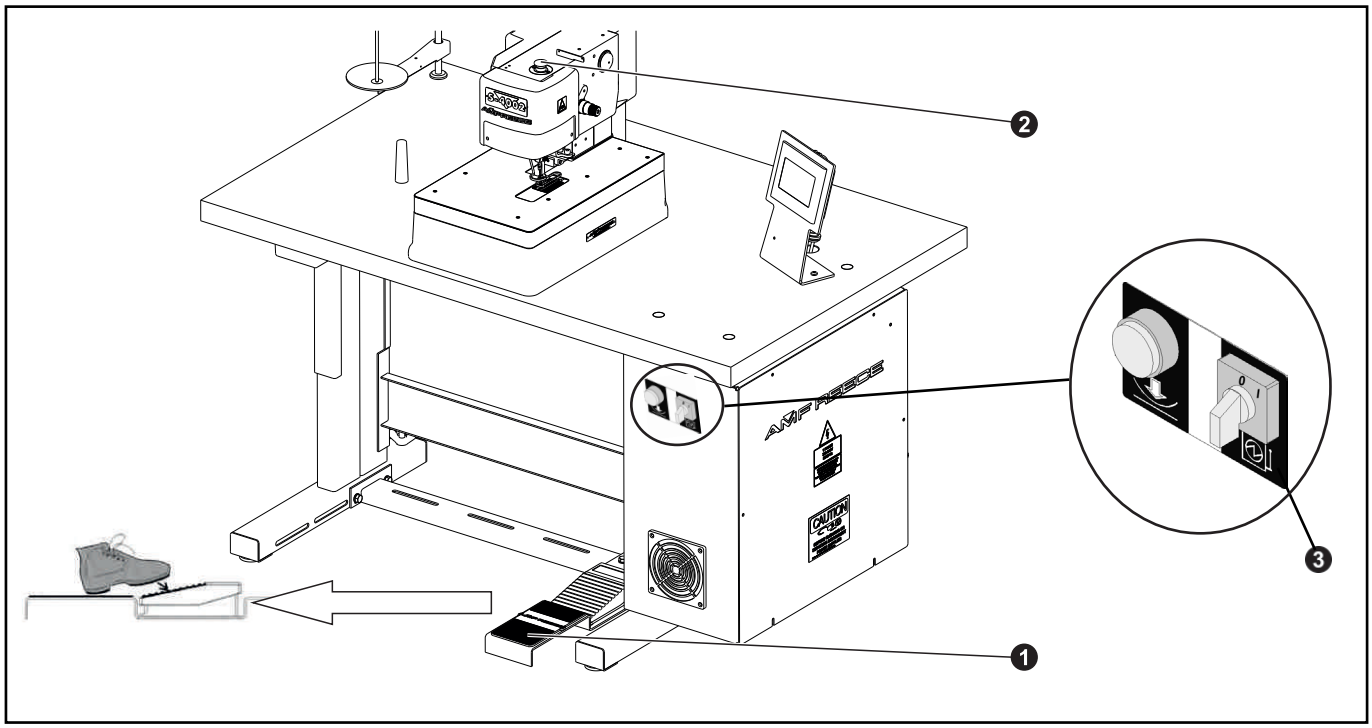

Released: 01/2022
E-mail: info@amfreece-cars.cz

D - MACHINE CONTROLS

2. OPERATOR CONTROL PANEL PUSH BUTTONS AND SWITCHES

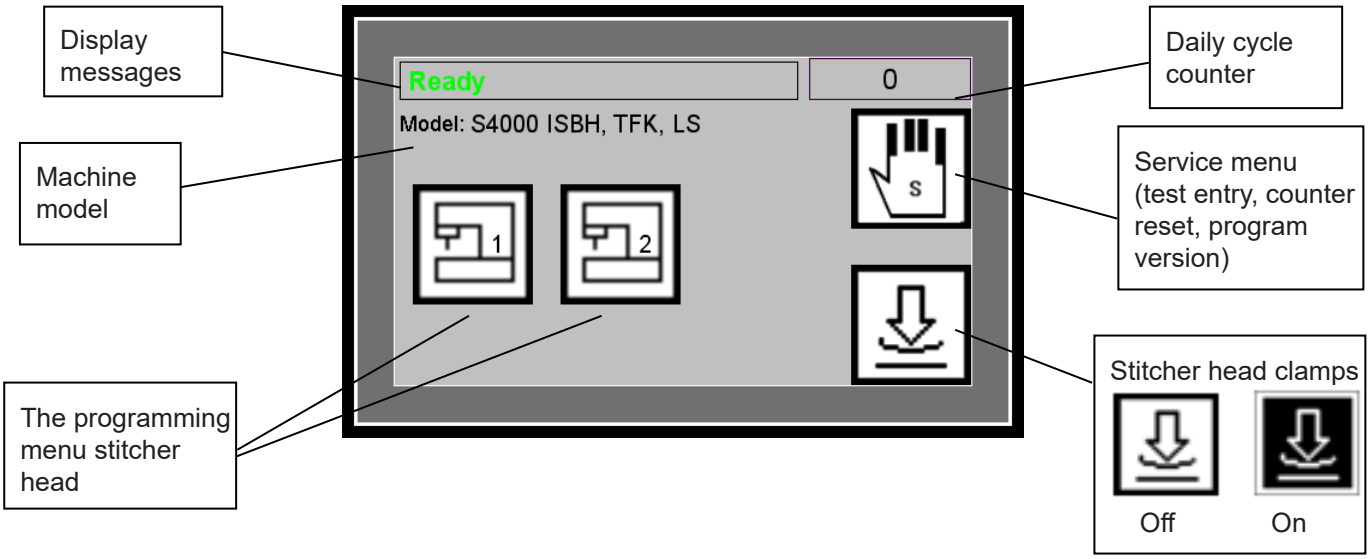

Display messages:

Standard messages:
- Ready
- Emergency stop
- Wait please
- Busy

Error messages:
- Motor not ready
- Low air pressure
- Low voltage

ATTENTION!
When doing any kind of adjustment, keep your hands off the needle area. The basic machine design is equipped with a pedal control; therefore never place your foot onto the foot pedal.

Error messages on the display are mentioned in *Troubleshooting* section.

Error setting

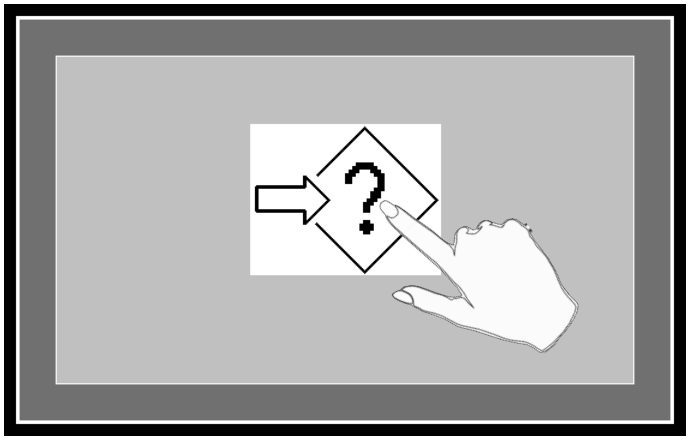

It will display if the value of the parameter is adjusted out of range.

Press the screen on the display, you will return on the main screen

D - MACHINE CONTROLS

3. THE PROGRAMING MENU STITCHING HEAD

Enter the sewing head program menu by pressing button 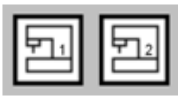

Parameters set 1

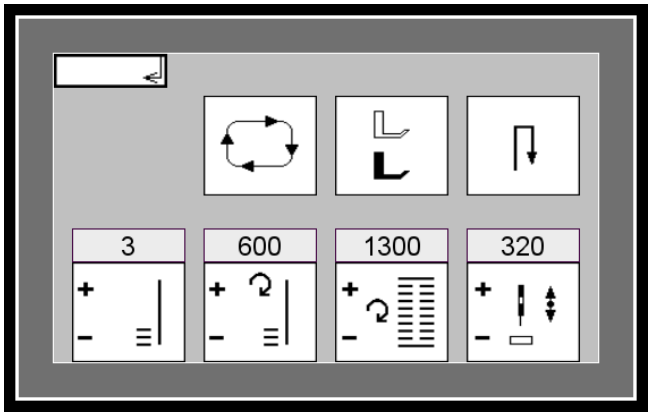

Parameters set 2

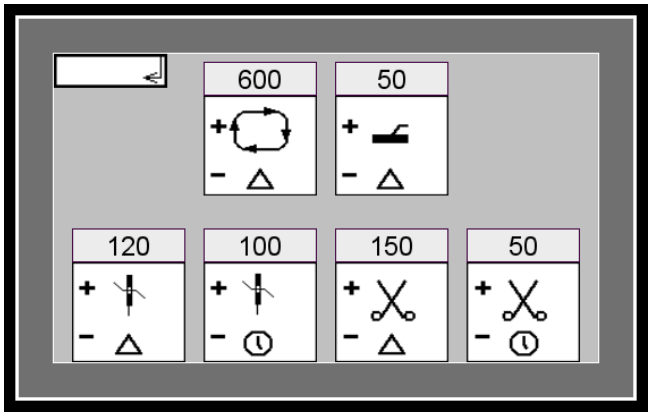

Released: 01/2022
E-mail: info@amfreece-cars.cz

D - MACHINE CONTROLS

	Setting the machine cycling. (On/Off). If the button is backlit, the function is active.
	Setting the foot pedal position. (Possible setting 1step/2steps). Adjustment for position 1 means, that the machine closes clamps and starts sewing in one moment.
	Adjustment for position 2 means, that the machine closes clamps on 1 position and on position 2 starts the sewing cycle.
	Setting the number of buttonhole sewing (It is possible to set 1 sewing/2 sewings/1 or 2 sewings) Setting 1 sewing
	Setting 2 sewings
	Setting 1 or 2 sewings. If you press the foot pedal and keep it pressed down after sewing 1 buttonhole, the buttonhole will be sewn again. If you press the foot pedal only at the start of sewing and release it, a buttonhole will be sewn by 1 sewing.
	Setting the number of stitches in slow speed at the beginning. (it is possible to set 0 – 3 rpm)
	Setting the slow start speed at the start of sewing cycle. (Range 500 - 1000 rpm)

	Setting the maximum sewing speed. (Range 1000 - 3840 ppm)
	Setting correction of the needle bar upper position. (Range 0 - 600 imp)
	Setting the delay between the button hole sewing cycles. (Range 500 - 2500 ms)
	Clamp feet opening delay adjustment, at the end of cycle. (Range 0 - 100 ms)
	Thread Draw-off delay. (Range 60 - 135 ms)
	Thread Draw-off time. (Range 30 - 200 ms)
	Setting the trim delay. (Range 0 - 200 ms)
	Setting the trim timing activation. (Range 30 - 60 ms)

To return to the main screen, press key.

D - MACHINE CONTROLS

4. TESTS

W a r n i n g !!! The tests can be carried out by qualified service men only.

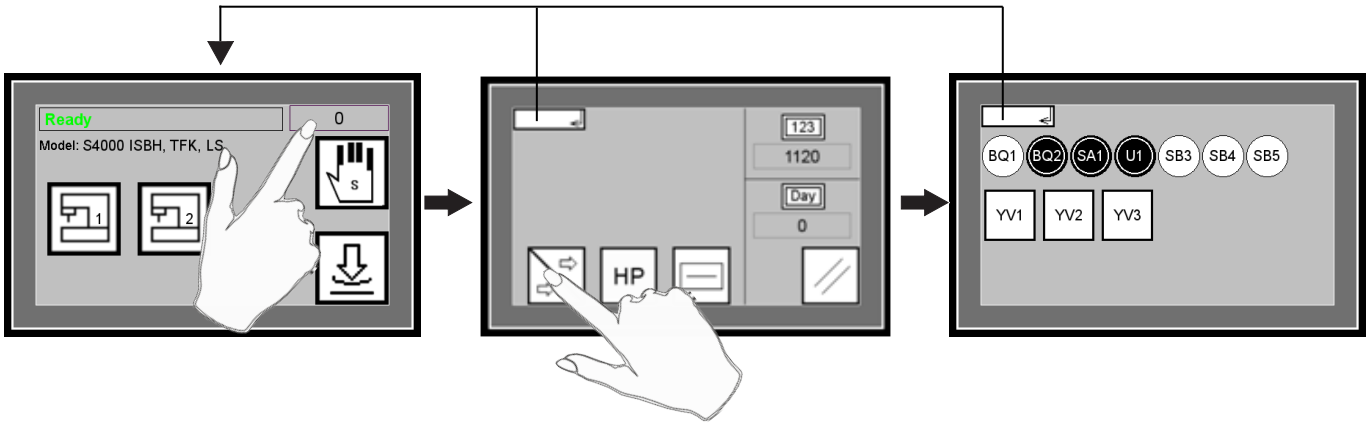

Inputs

BQ1 – The end position sensor BQ1. The symbol signalizes correct function of the sensor of the end position of the cam (HOME) BQ1.
Activate the sensor using a metal tool and the button turns black.

BQ2 – The symbol signalizes the correct function of the air pressure button BQ2.
If the air pressure is less than 0,5 MPa the button is under lighted.

SA1 – The symbol signalizes the correct function of the emergency button SA1.
After pressing button key EMERGENCY STOP the button is under lighted.

U1 – The symbol signalize the correct function of the servodriver.
If the servodriver is in operation, the button is underlighted.

SB3 – The sewing head clamps button.
When pressing the clamps button on the machine or in the main menu, the symbol turns black.

SB4 – The symbol signalizes the correct function of the first position button of the pedal SB4.
When the foot pedal is pressed to its first position the button SB4 is underlighted.

SB5 – The symbol signalizes the correct function of the second position button of the pedal.
When the foot pedal is pressed to its second position the button SB5 turns black.

Outputs

YV1 – The button is used to activate the YV1 valve of the draw-off lever. The cutting lever goes down.

YV2 – This button is used to activate YV2 valve of the clamping. The clamps are pressed onto the fabric.

YV3 – The button is used to activate the YV3 valve of the thread trimming.

Released: 01/2022
E-mail: info@amfreece-cars.cz

D - MACHINE CONTROLS

5. PROGRAM VERSION

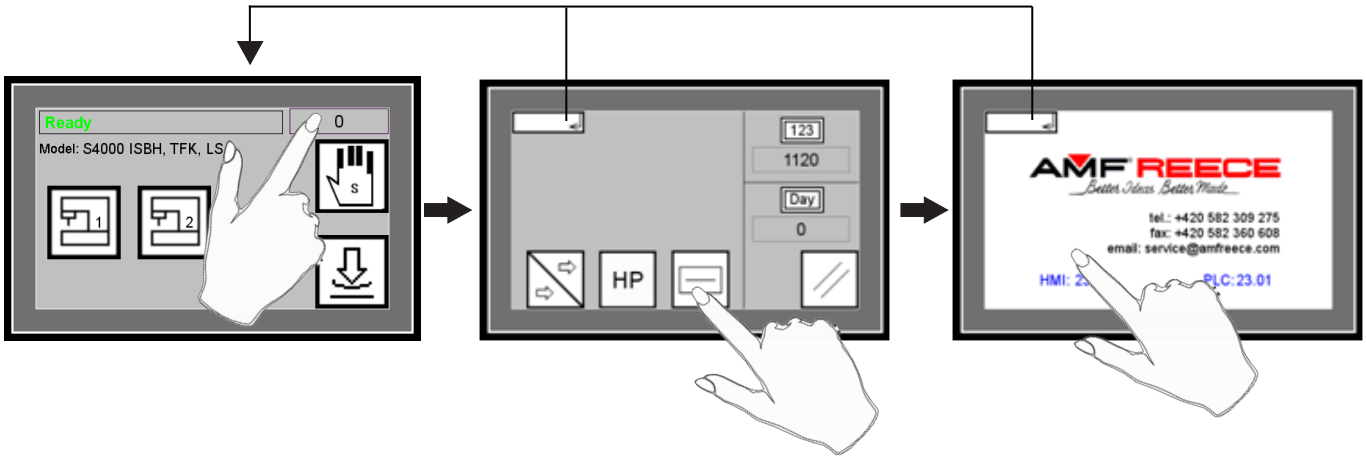

6. COUNTER RESET

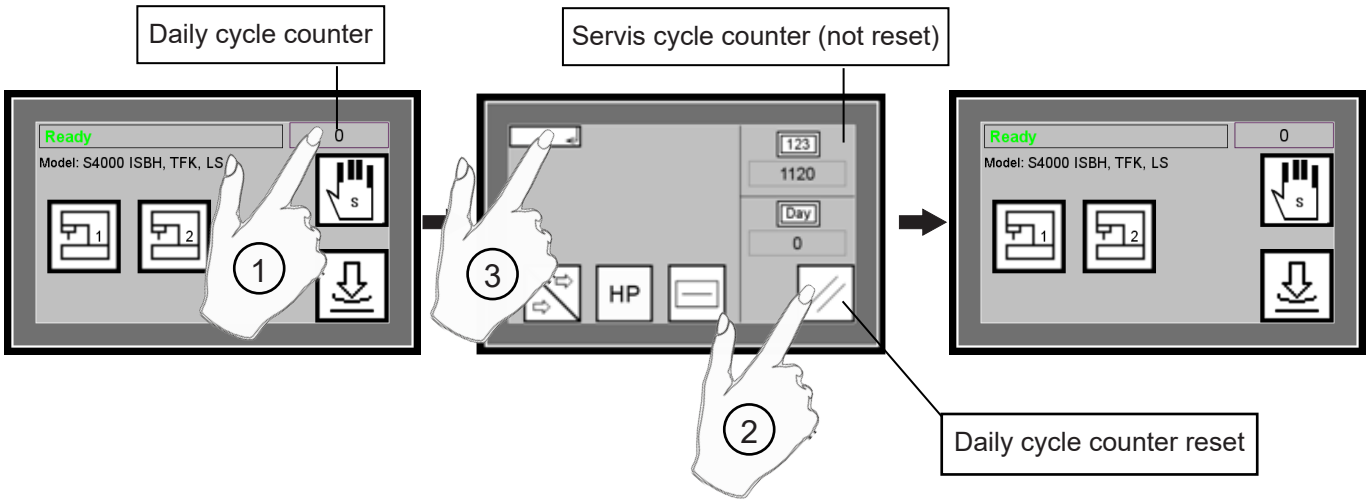

D - MACHINE CONTROLS

7. PARAMETER CHECKLIST

PARAMETER	RANGE	SETTING
	Off / On	Off
	1 step / 2 steps	2 steps
	1 repeat / ½ repeat / 2 repeat	1 repeat
	0 - 3	0
	500 - 1000 rpm	1000
	1000 - 3840 rpm	3500
	0 - 600 ipm	320
	500 - 2500 ms	500
	0 - 100 ms	50
	60 - 135 ms	
	30 - 200 ms	
	145 - 200 ms	
	30 - 60 ms	

Released: 01/2022
E-mail: info@amfreece-cars.cz

E - STANDARD MACHINE ADJUSTMENT

1. MA CHINE HOME POSITION

The needle bar is i n the upper position. The needle ❶ descends to the right side of the throat plate slot ❷ during the first stitch. The marks ❽ on the handwheel and cover casing are aligned.

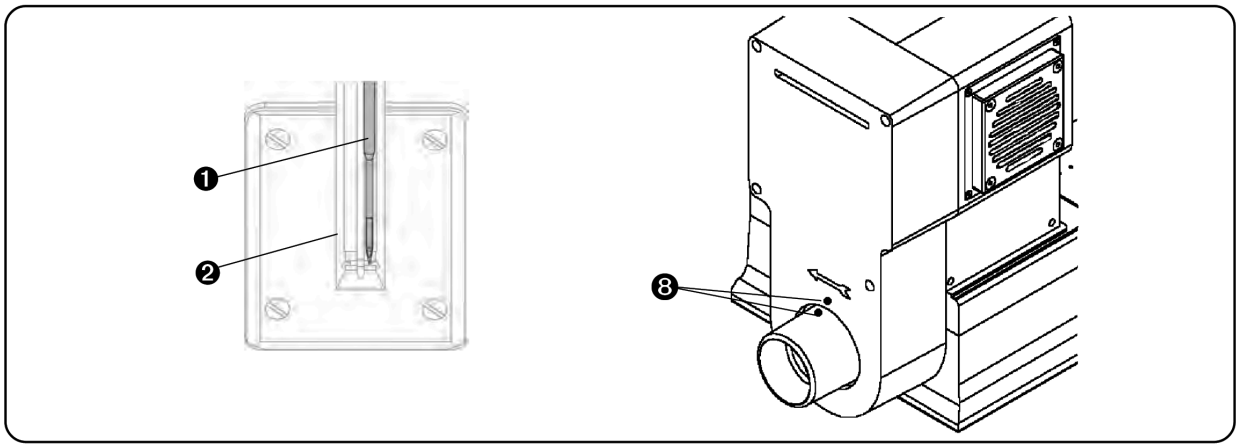

2. THE MAIN CAM ADJUSTMENT

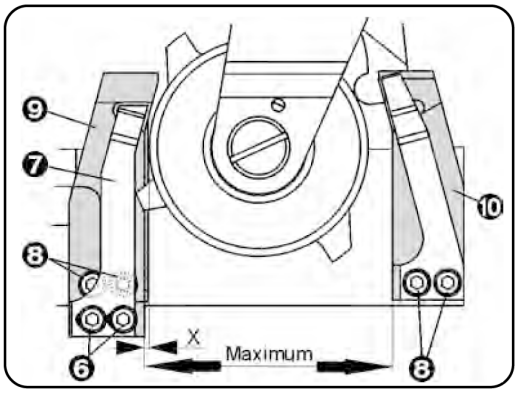

1. Bring the machine to the home position.

2. Tilt the machine onto the rest pin and view the main cam assembly . The clereance **„x“** has to be minimal between the main cam shifting mechanism if the mechnisms hit into each other, loose the screws ❻ and take out the spring ❼, loose the screws ❽ and arms ❾ ❿ push aside to maxi mum in the direction away from the main cam after adjusting, check the minimal clereance **„x“.**

3. THE PRINCIPLES FOR THE MACHINE ADJUSTMENT

1. Before starting doing adjustments switch the machine into the service mode by pressing the emergency stop button ❶ on the machine head and releasing it again. Press the button ❷ on the control panel afterwards. ”Service mode” message appears on the display ❸.

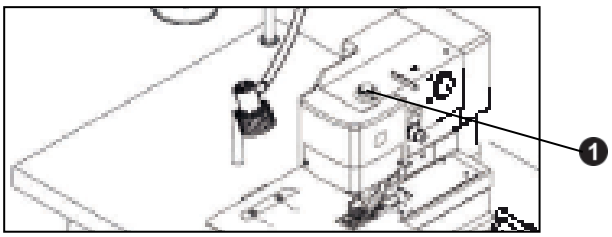

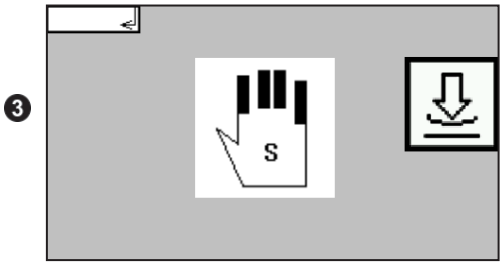

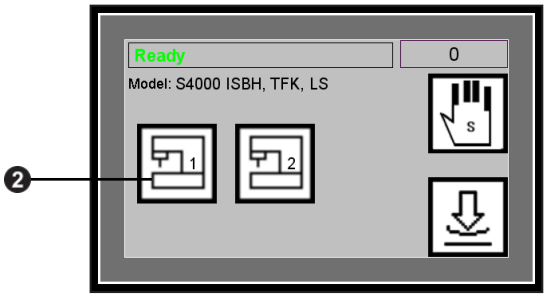

WARNING! THE MACHINE CANNOT START OPERATION BY PRESSING THE FOOT PEDAL IN THE SERVICE MODE!

2. Press button to go back onto the main screen.

E - STANDARD MACHINE ADJUSTMENT

4. NEEDLE BAR

4.1. Needle bar crank position

Turn the handwheel ❺ and loosen the screw ❶ in the needle bar crank ❷. Turn the handwheel until the needle bar reaches the upper position. Pulley screw ❸ on the main shaft should be in the same line with screw ❹. Tighten the screw ❶.

NOTE: The needle bar should be in the top dead center position when the screw ❸ is at 12 o'clock. To check, turn the handwheel clockwise and counter clockwise. The needle bar must move downward in either direction. The needle ❿ makes its first stroke into the right side of the throat plate.

4.2. The needle bar height adjustment

Adjust the needle bar ❻ height to 16 mm (5/8") from the surface of the throat plate ❼ to the lower edge of the needle eye. Use height gauge ❾.

Loosen the set screw ❽ and move the needle bar up or down as necessary.

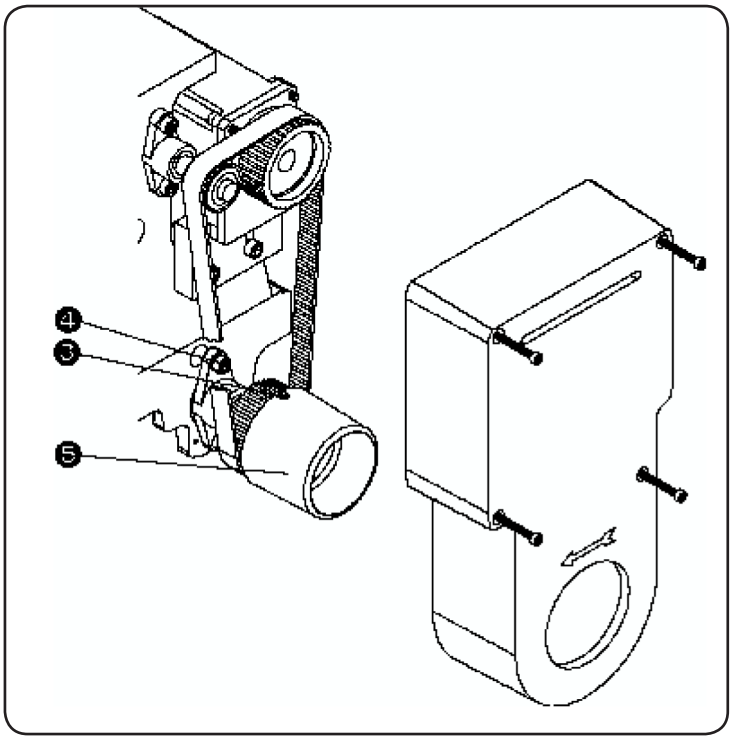

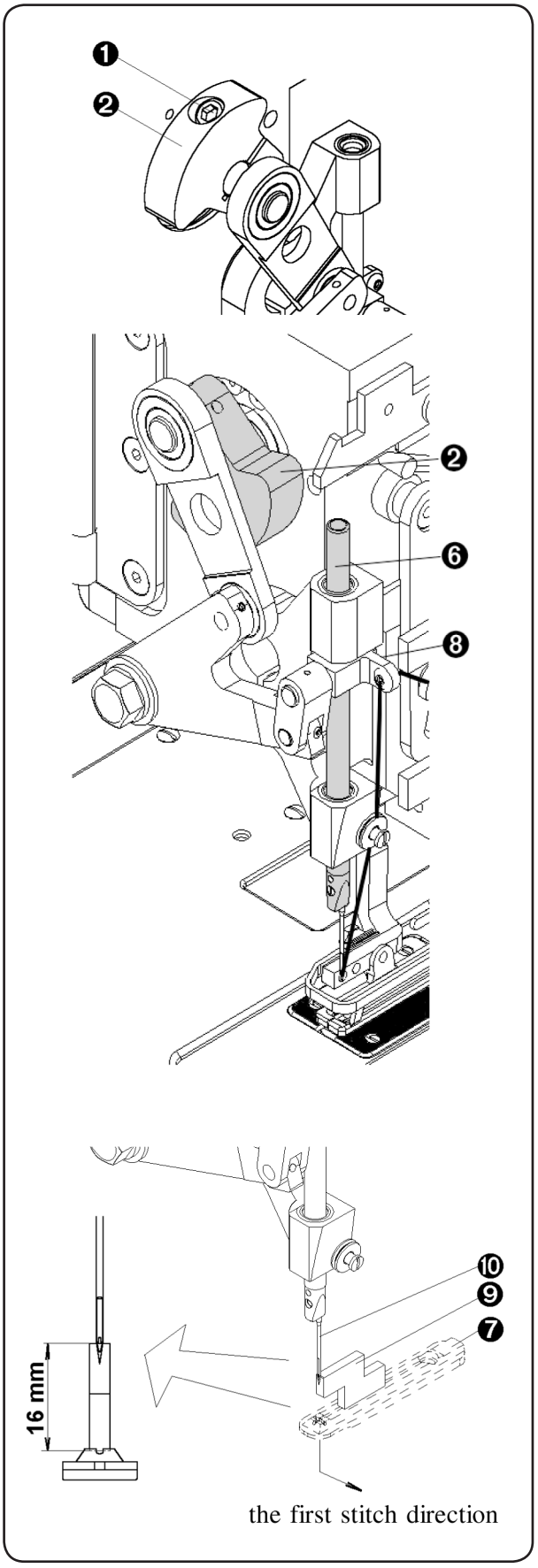

Released: 01/2022
E-mail: info@amfreece-cars.cz

E - STANDARD MACHINE ADJUSTMENT

5. BITE

Before the bite adjustment, remove the pulley cover ❷ and the head cover ❶.

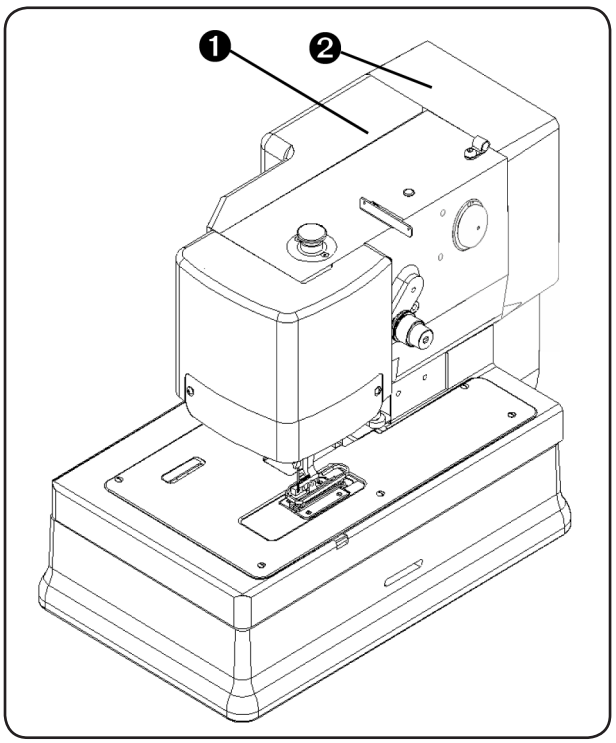

5.1. Bite cam

a) Check if the machine is i n the home position.

b) Tilt the machine onto the rest pin ❼. If the adjustment is correct, the second cam locking screw ❽ (counter clockwise of the bite cam ❾) must be roughly perpendicular to the bedplate casting.

c) Adjust the position of the bite cam so that all of the needle bite motion occurs equally with the needle out of the work piece on the up and down stroke.

Note: There must be no bite movement before the needle ❿ comes out of the work nor after it has descended into the work - see illustration. Tighten both locking screws ❽ securely.

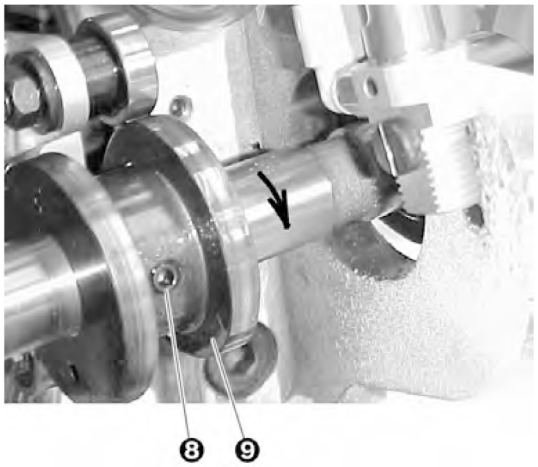

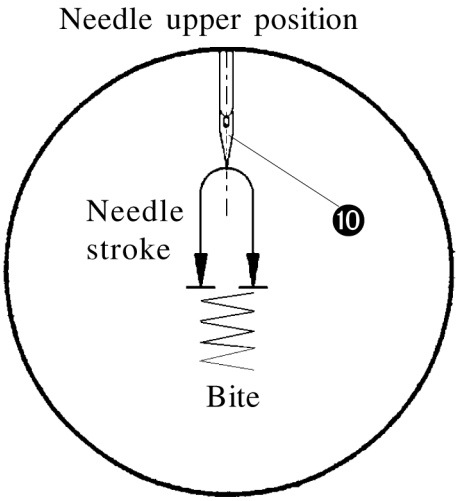

E - STANDARD MACHINE ADJUSTMENT

5.2. Bite width adjustment

To adjust the bite width, first remove the head cover for access to adjustments.

The S-4000 is fitted with a regular bite throat plate ⓫, that allows a bite range of 1.5 mm (1/16“) to 2.3 mm (3/31“).

a) loosen the adjusting screw ⓬

b) to increase the bite width, raise the bite lever ⓭

c) to decrease the bite width, lower the bite lever ⓭

d) tighten the adjusting screw ⓬

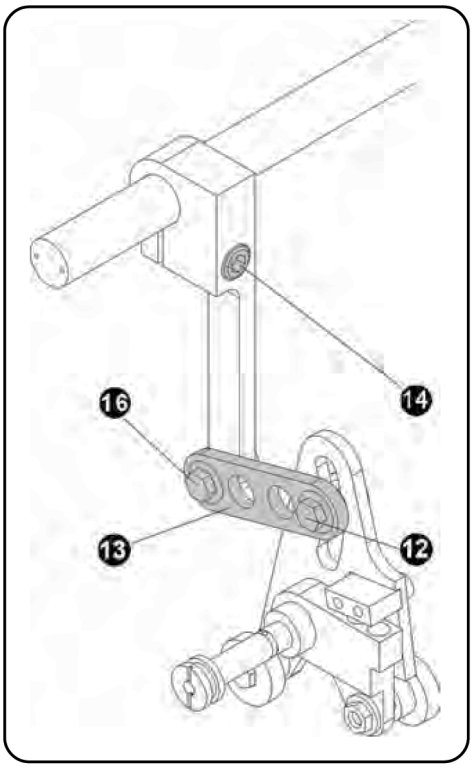

5.3. Centering the bite over the throat plate

a) with the machine in the home position - loosen the clamping screw ⓮ on the bite lever ⓯

b) for rough adjustment, using the handwheel, rotate the needle bar to its full down position and move the needle to the right side of the throat plate slot ⓫. Turn the hand wheel to the second needle ❿ down stroke and compare the needle position in the left side of the throat plate. Continue adjusting until the needle is roughly of equal distance from the right and left sides.

c) tighten the clamping screw ⓮

d) For finite adjustment loosen the screw ⓰ and rotate the eccentric nut ⓱. Tighten the locking screw ⓰.

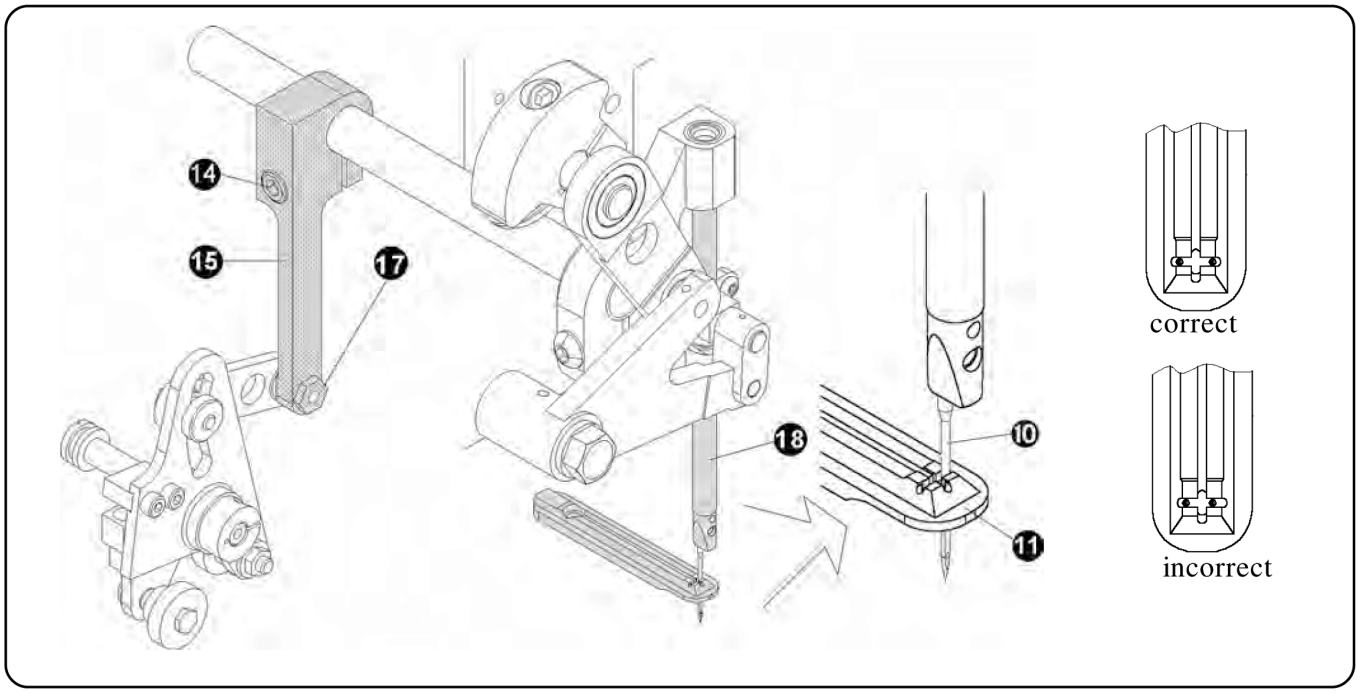

Released: 01/2022
E-mail: info@amfreece-cars.cz

E - STANDARD MACHINE ADJUSTMENT

6. FEEDING

1. Tilt the sewing head onto the rest pin.
2. Bevel Gear Adjustments
   Manually turn the handwheel counter clockwise until the drive spring in the main cam engages with a indent . The feeding lever is on the highest point of the feeding cam. Remove the bevel gear cover and loosen the screws ❶, ❷ on the horizontal bevel gears and screw ❸ on the stop.
3. Loosen two adjusting screws ❹ in the right collar ❺. Adjust the dimension 11 mm from the end of the feed shaft ❻ to the collar ❼ by pressing the feed shaft ❻ against the right collar ❺. Tighten the adjusting screws ❹ in the right collar ❺. The tension of the left collar on the shaft is set.
4. Engage the right bevel gear ❽ with the vertical bevel gear ❾ and lock its position by the set screws ❶.
5. Manually turn the handwheel counterclockwise until the drive spring engages with right shifter block pocket . The feeding lever is on the lowest point of the feeding cam. Slide the right gear ❿ into engagement with the vertical gear ❾. Tighten the set screws ❷ securely . Move the crank drive to the left bevel gear ❿ and lock it by screw ❸.

The bevel gear adjustment is done, by manually turning the handwheel finish the sewing cycle and bring the machine to the home position. Reinstall the bevel gear cover.

6. Clamp plate movement occurs only when the needle point has risen above the work piece and must be completed before the needle descends into the work.
7. For adjustment use a piece of paper to see the needle punctures.

   If feeding occurs while the needle is in the work, engage the drive spring into a indent.

   Loosen the screws ⓫ on the feed cam and adjust its position as needed so that all feed motion occurs with the needle out of the work. Retighten the feed cam set screws.

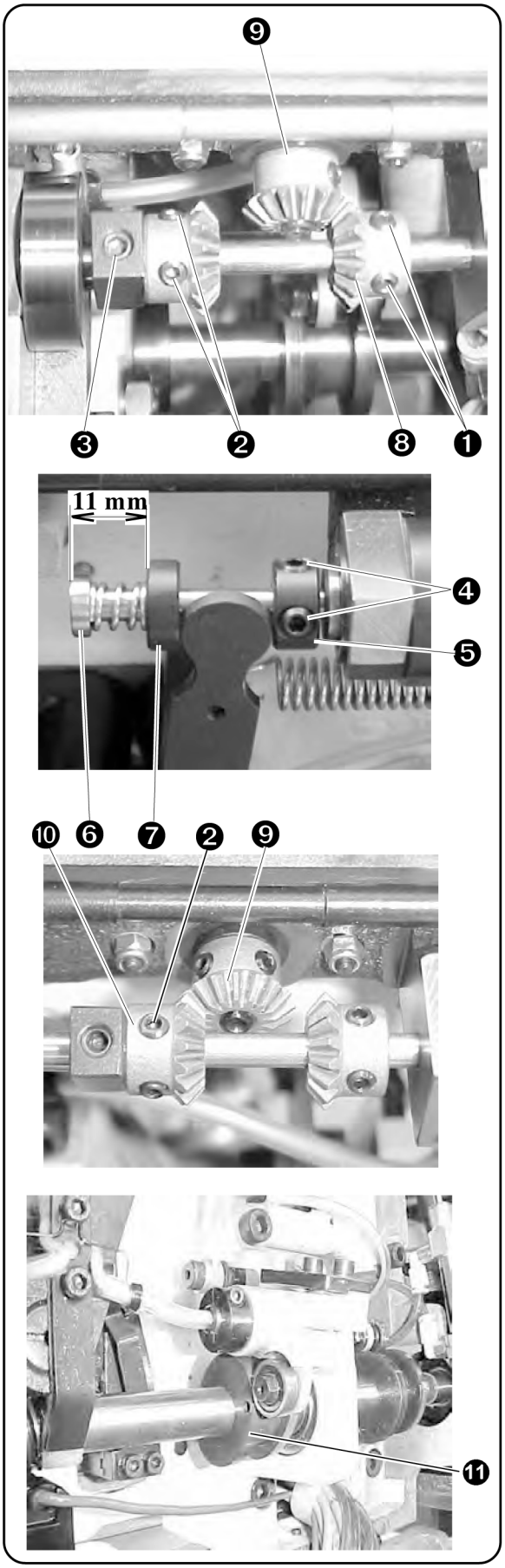

E - STANDARD MACHINE ADJUSTMENT

7. SLIP CLUTCH

The slip clutch pressure is factory set and under normal conditions will not need adjusting. The correct clutch torque setting is 0.43 Nm (60 to 65 inch ounces).

Hold the nut ❶ and tighten the adjusting screws ❷ with a torque screwdriver. Apply an equal amount of pressure to both sides of the clutch.

NOTE: If a torque screwdriver is not available, tighten the lock nuts so that the screws ❷ extend through the nuts ❶ 1.5 mm.

CAUTION: Too little torque will produce an improper material feed.
Too much torque may damage parts (bevel gears).

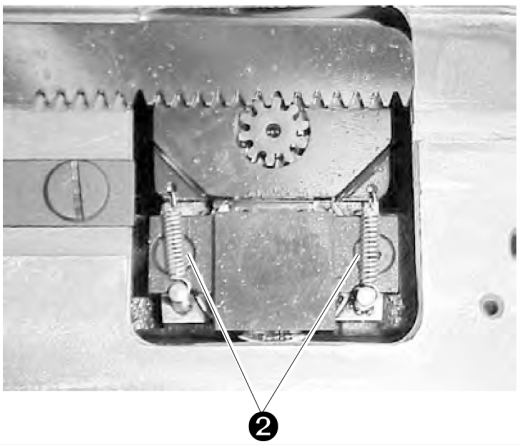

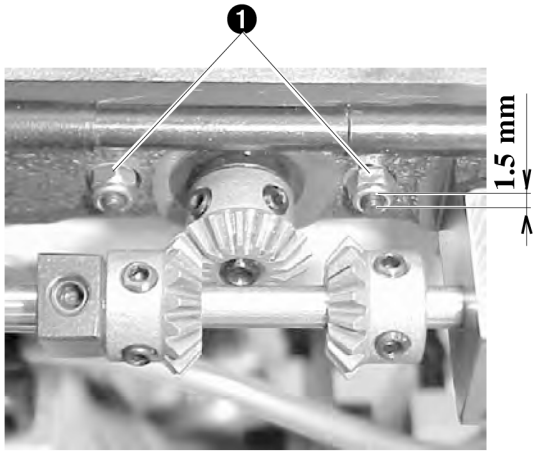

8. STITCH DENSITY

Adjust the feed connecting link position ❶ in the cam follower slot □to obtain the correct stitch density.

To increase the density 1:

a) Loosen the hex socket screw ❸ and lower the link ❶ away from the bedplate to increase density.

b) Tighten the hex socket screw ❸.

Maxi mum density i s 14 stitches per 10 mm.

To decrease the density 2:

a) Loosen the hex socket screw ❸ and raise the link ❶ toward the bedplate to decrease density.

b) Tighten the hex socket screw ❸.

Minimum density is 3 stitches per 10 mm.

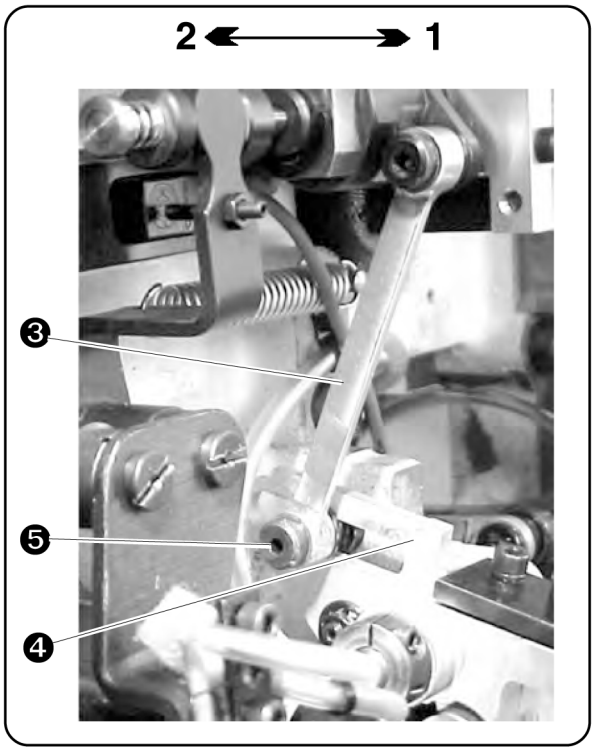

Released: 01/2022
E-mail: info@amfreece-cars.cz

E - STANDARD MACHINE ADJUSTMENT

9. LOOPER ADJUSTMENTS

Before making this adjustment, follow the points described below:

- Turn the handwheel and observe the position of the connecting link ❶ at both ends of the looper link arm travel ❷. Angle A ❸ must equal angle B ❹.
- If incorrect - loosen the hex mounting screw ❺ and rotate the eccentric adjusting nut ❻ as needed. Tighten the hex mounting screw ❺.
- Turn the handwheel and bring the needle bar to the upper position.
- Check if the needle is straight.
- Tilt the machine head onto the rest pin and check if the mark ❼ on the looper cam ❽ is on the left side. If the mark is on the right side, remove it and install it correctly . Return the sewing head back.
- Remove the cover plate ❾, disconnect the air tubes from the clamp feet cylinder and remove the clamping assembly ❿ from the machine, remove the throat plate ⓫, trimming hook cover ⓬ and trimming hook. Dismantle the loopers with holders.

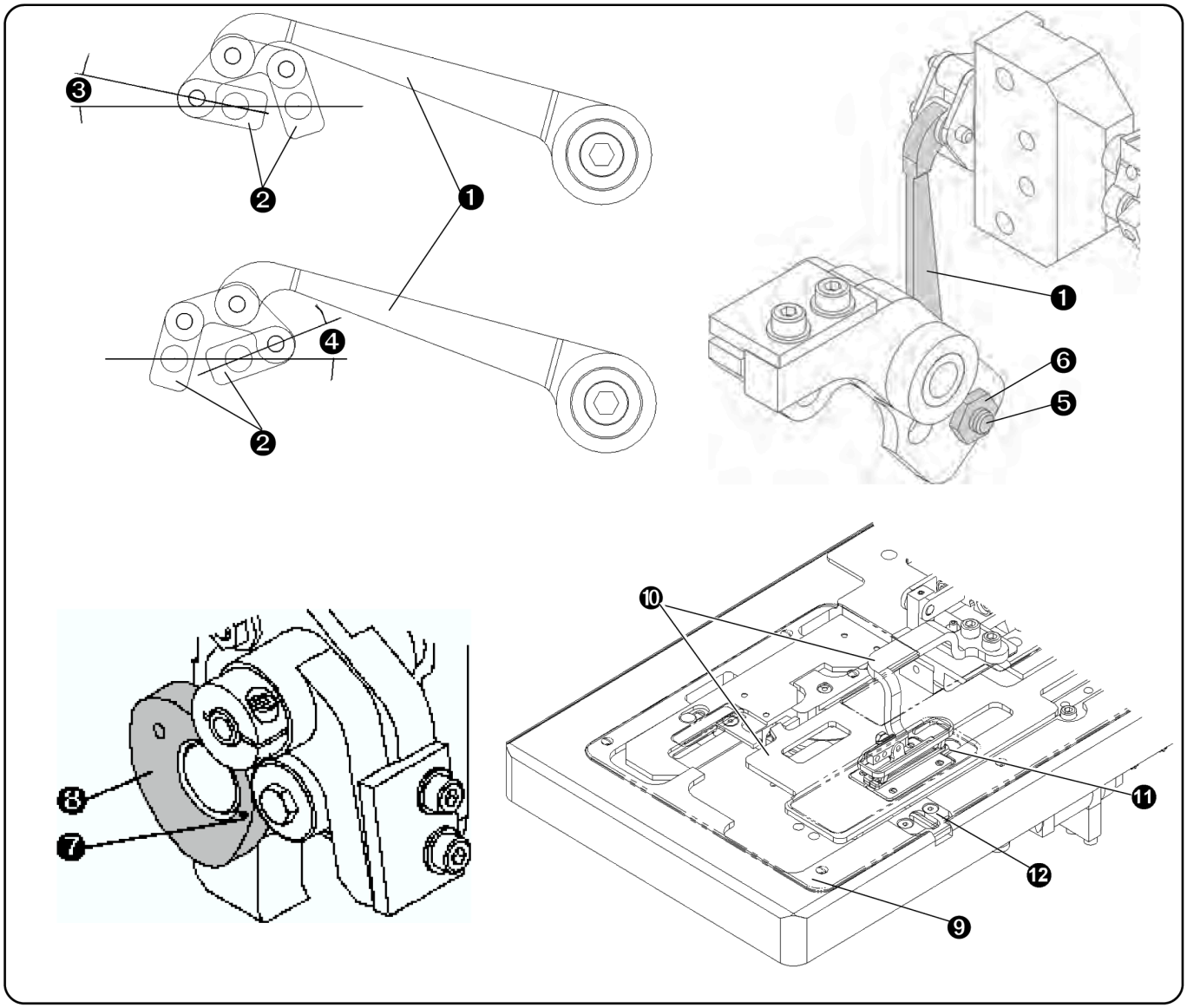

E - STANDARD MACHINE ADJUSTMENT

The first looper adjustment

1. Bring the machine to the home position and loosen the screws ⓭ of the looper cam ❽ and adjust the looper cam to the lowest position.
2. Loosen the looper set screw ⓯ and turn the looper to be perpendicular to the hole in the looper holder.
3. Install the holder with the first looper ⓮ on the shaft.
4. Loosen the looper holder screw ⓰ and move the holder so that the needle passes the looper i n the center of the looper recess. There must be clearance 0,4 mm between the needle and the looper recess. Tighten the looper holder screw ⓰.
5. Loosen the looper screw ⓯ and turn the looper ⓮ to the needle to obtain the distance 0,1 mm between the needle and the looper tip.
6. Turn the hand wheel counter clockwise and insert the gauge ⓱ with 1 mark (wider side of the gauge) between the needle bar holder and the needle bar clamp when the needle returns to the home position from the lower position.
7. Check to determine if the tip of the looper is at the centerline of the needle 1 mm above the needles eye.
8. If incorrect - loosen the looper cam screw ⓭ by the wrench and hold it . Turn the hand wheel (counter clockwise - if the looper tip is higher than 1 mm; clockwise - if less than 1 mm).

   Tighten both looper cam screws ⓭ securely .
9. If it is necessary to adjust the looper cam again, check the clearance 0,4 mm between the needle and the looper recess.

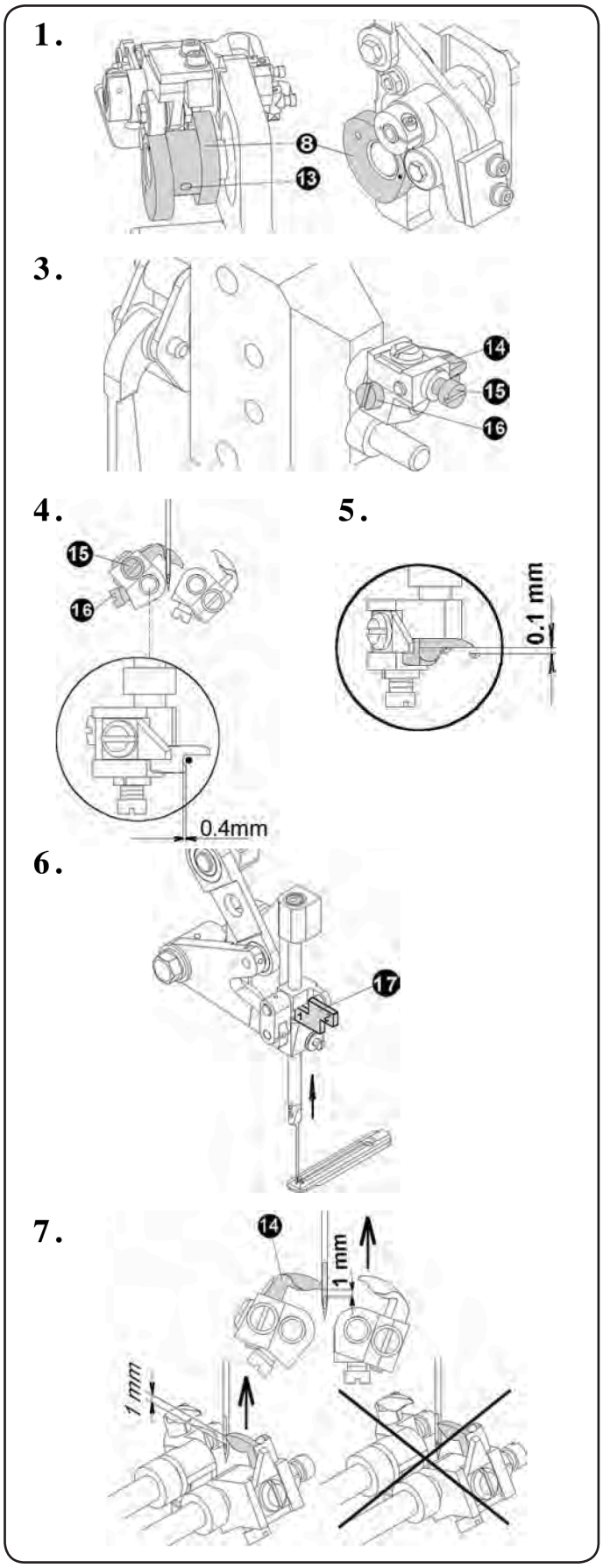

Released: 01/2022
E-mail: info@amfreece-cars.cz

E - STANDARD MACHINE ADJUSTMENT

The second looper adjustment

10. Insert the second looper ⓲ on the looper shaft.
11. Loosen the looper holder screw ⓳ and move the holder so that the needle passes the center of the looper recess. There must be clearance 0,4 mm between the needle and the looper recess. Tighten the looper holder screw.
12. Loosen the looper screw ⓴ and turn the looper ⓲ to the needle to obtain the distance 0,1 mm between the needle and the looper tip.
13. Turn the handwheel counter clockwise, insert gage ⓱ with mark 2 (narrower side of the gage) between the needle bar holder and needle bar clamp.
14. Check if the looper tip crosses the axis of the needle 1 mm above the needle eye.
15. If it is necessary to adjust the looper cam again, check the first looper adjustment.

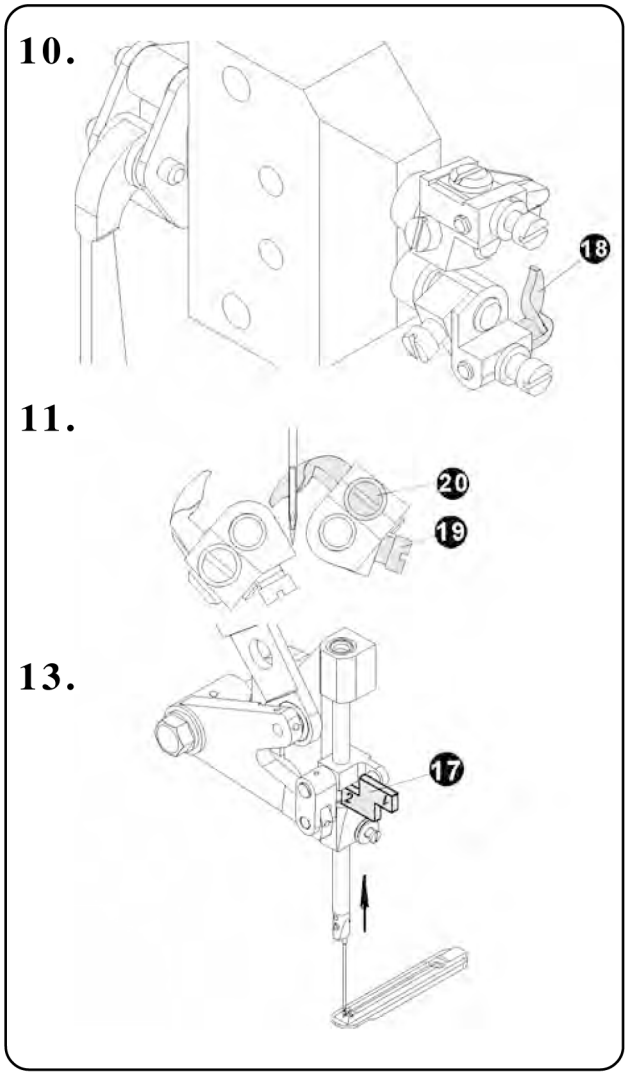

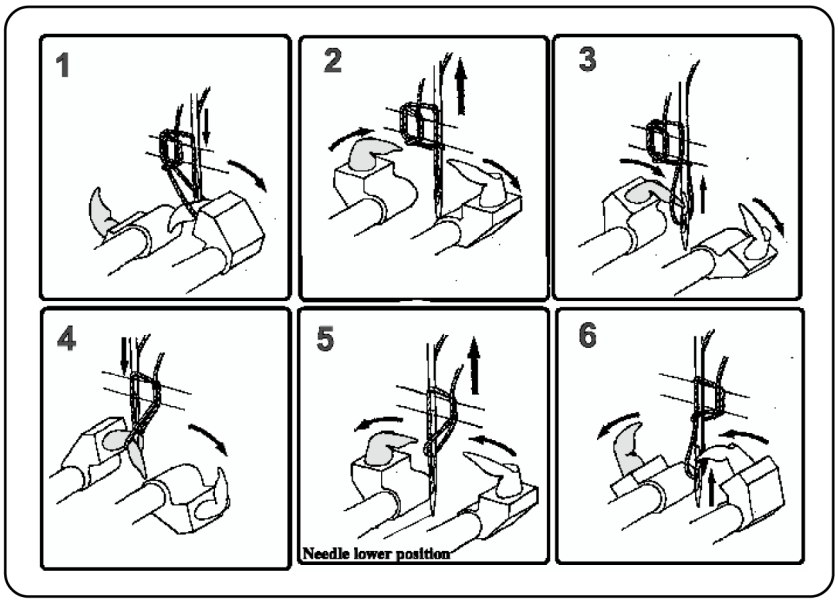

E - STANDARD MACHINE ADJUSTMENT

10. THE CLAMP PLATE HOME POSITION

1. The home position of the clamp plate before sewing is:
   a) the bevel gears ❶ on the feed shaft ***are not engaged*** with the vertical bevel gear
   b) the clamp plate is positioned all the way to the right (to the head casting)

3. If the bevel gears are engaged:
   a) loosen the main shaft worm gear screws ❷, hold the worm gear and turn the hand wheel clockwise or counterclockwi se as needed.

Note: If this adjustment is correct, the first needle puncture goes to the right slot of the throat plate.

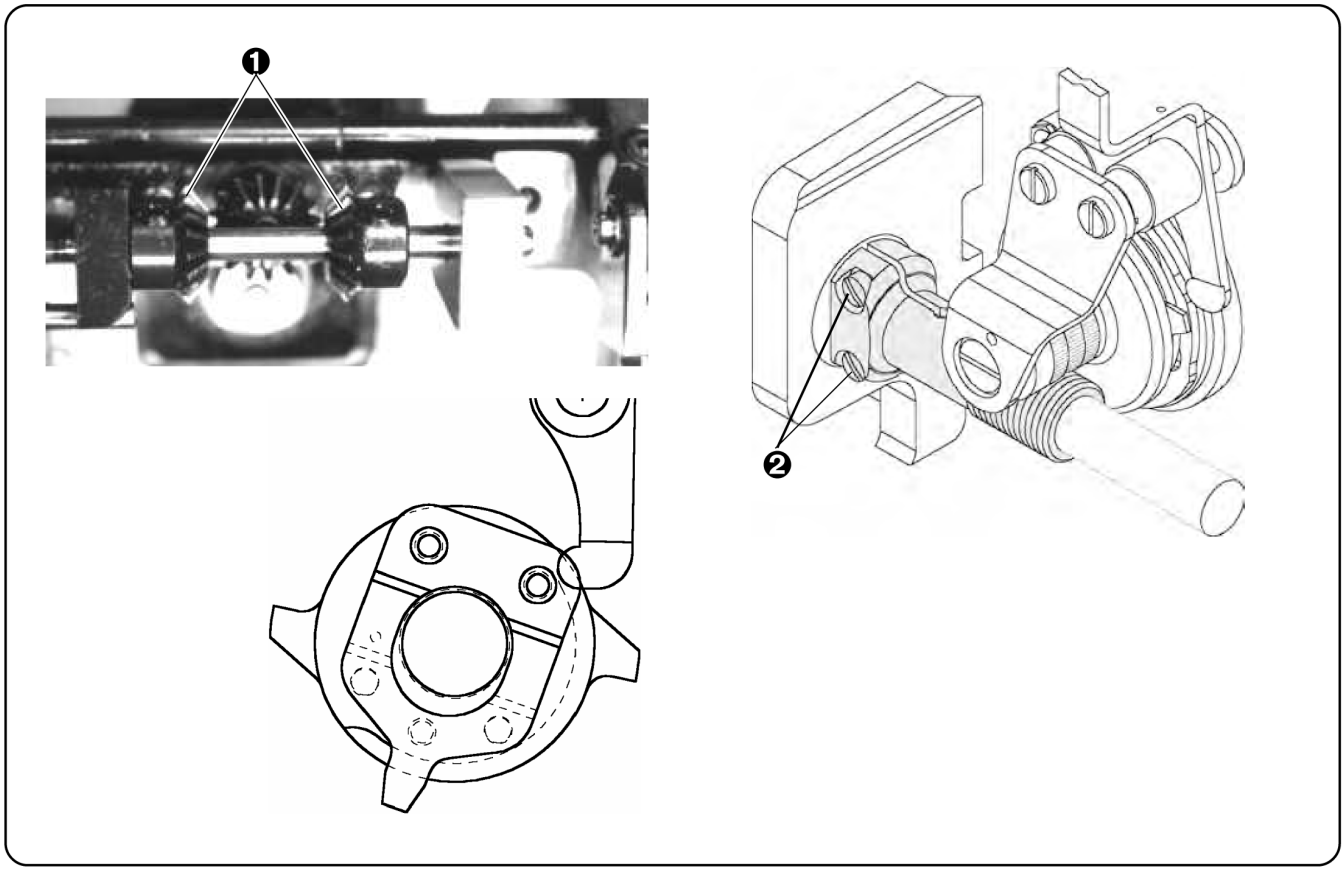

Released: 01/2022
E-mail: info@amfreece-cars.cz

E - STANDARD MACHINE ADJUSTMENT

11. CLAMP PLATE TO THE CENTER OF THE THROAT PLATE ADJUSTMENT

1. If the clamp plate ❶ is not adjusted to the center of the throat plate ❷, tilt the sewing head against the rest pin.
2. Loosen the nut ❸ in the slot of the lever ❹ and move the clamp plate as needed. Tighten the nut.

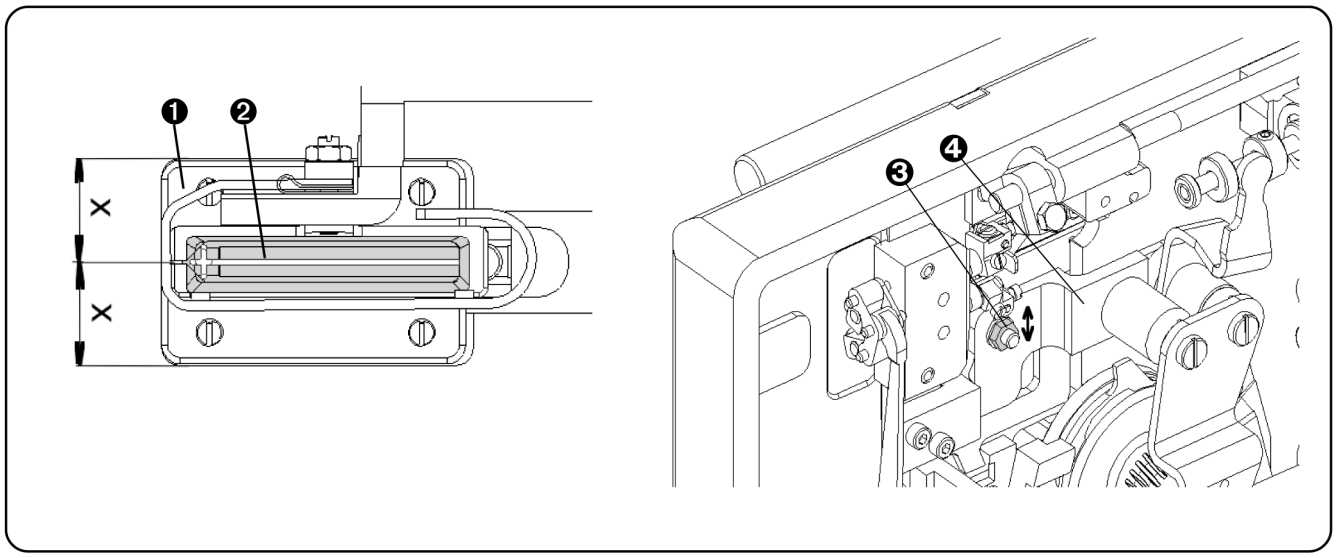

12. THE SEWING LENGTH CHANGE

To change the sewing length, loosen the screw ❺ and move the stop as needed.

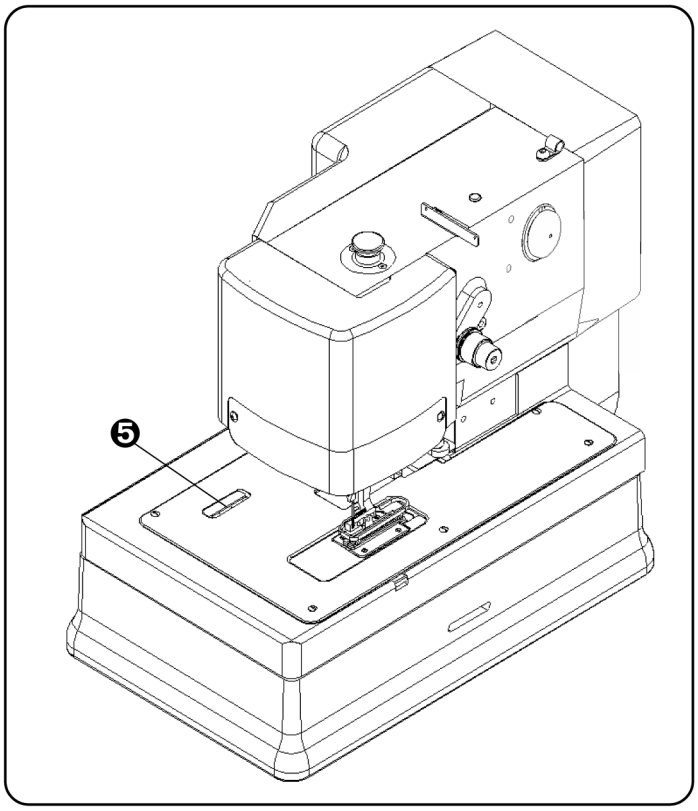

E - STANDARD MACHINE ADJUSTMENT

13. HEAD CLAMP FOOT ADJUSTMENT

13.1. Adjustment f or clamp height

Be sure that air supply is switch on and the clamp foot is opened. If clamp foot is not opened, push the clamp Up / Down button.

a) loosen the nut ❶

b) turning the screw ❷ clockwise lowers the clamp foot mechanism ❸ to clamp mat ❹

c) tighten the nut ❶

NOTE: Correct height is when the underside of the clamp foot is slightly lower than the point of the needle in the home position.

13.2. Clamp foot to the center of the needle

Be sure that the clamp foot is closed. If clamp foot is not closed, push the clamp Up / Down button.

a) turn the handwheel to be sure that needle does not hi t the clamp foot ❸. If it hits:

b) push the clamp Up / Down button to open the clamp foot

c) loosen the screw ❺ and get the clamp foot arm further from the needle and tighten the screw ❺

d) to check this adjustment, turn the handwheel when the clamp foot is closed. The needle must not hit the clamp foot.

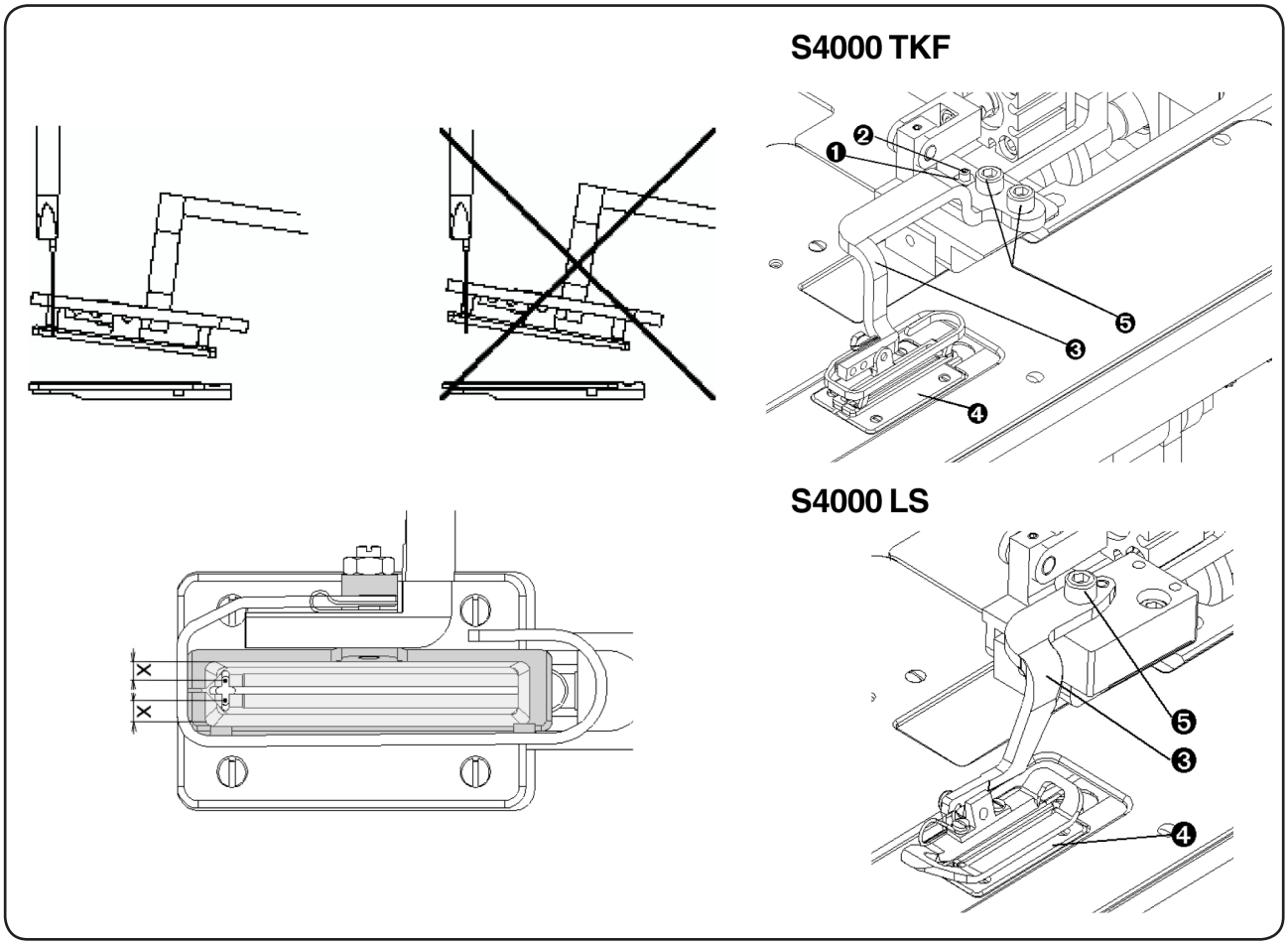

Released: 01/2022
E-mail: info@amfreece-cars.cz

E - STANDARD MACHINE ADJUSTMENT

14. THREAD DRAW-OFF

14.1. Adjustment of the Draw-Off Lever Position

The correct adjustment ensures a long enough thread tail for starting the next sewing. Remove the covers because this mechanism adjustment is performed i n the rear of the head. Air supply is necessary for this adjustment.

a) loosen the screw ❻.

b) the piston ❼ of the cylinder ❽ is in the home position (retracted). Move the lever ❾ to the pin ❿ with minimum clearance 0.1 mm. Tighten the screw ❻.

c) check the correct clearance adjustment by switching the valve ⓫ of the draw-off cylinder (Y V1).

14.2. The thread end adjustment

If the first stitches are missing or the sewing is not sewn, follow the below mentioned steps:

a) loosen the screw ❶.

b) turn the draw-off lever ❷ counter clockwise to increase the thread tail length; turn the draw-off lever clockwise to decrease the thread tail length.

14.3. Locking the stitches

If the skipped stitches problem appears during the sewing, follow the below mentioned steps:

a) loosen the screw ❸.

b) move the thread take-up ❹ to increase the size of the needle loop.

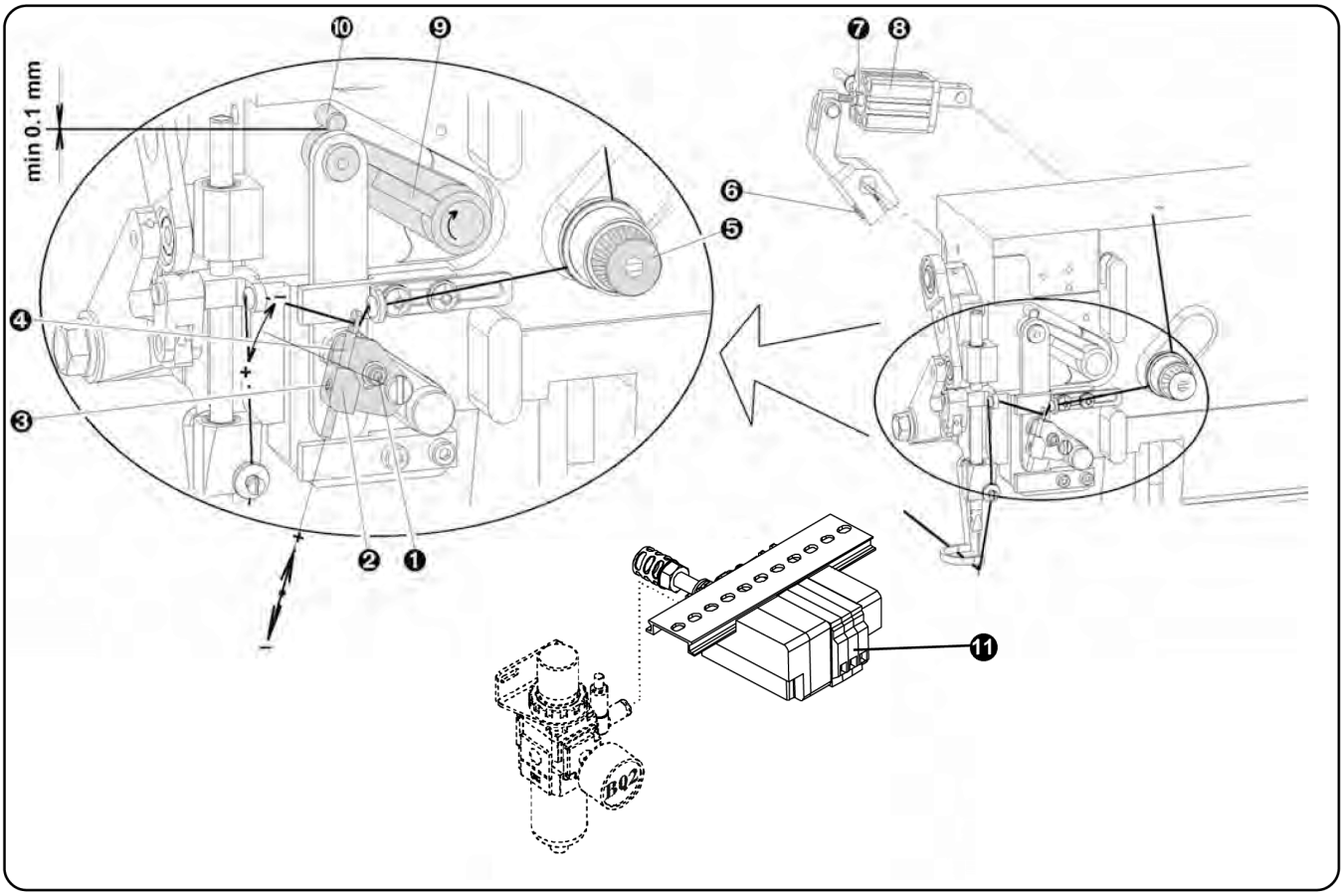

15. THREAD TENSION

The thread tension influences the appearance of the sewing. A thread tension change may be needed if the thread and fabric change. Check to be certain all parts, which contact the thread, are smooth and polished with no burrs or sharp edges.

- By turning the tension knob ❶ clockwise, the thread tension increases.
- By turning the tension knob ❶ anti-clockwise, the thread tension decreases.

NOTE: Too big thread tension can cause the unsightly appearance of the sewing when sewing on a thin and elastic material.

15.1. Adjustment of the tension discs opening

The opening of the tension discs is performed in the last phase of the sewing. When the tension discs are opened, it is possible:

a) to pull the thread from the spool when the draw-off lever ❷ receives the impulse for operation.

b) by decreasing or increasing of the air flow it i s possible to regulate the tightening of the last loop in the sewing.

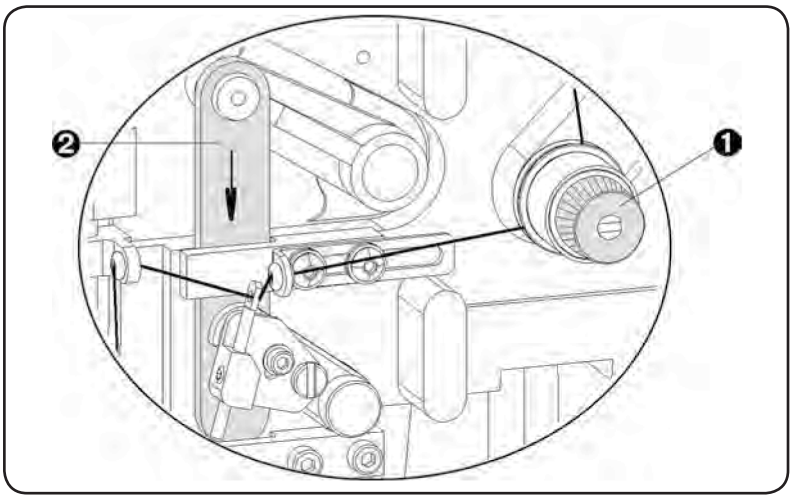

E - STANDARD MACHINE ADJUSTMENT

15.2. The correct position of the tension mechanism

a) remove the tension assembly ❸ from the shaft ❹

b) check if the distance between the stud slot edge and the pin ❺ is 3.5 mm If incorrect, it is necessary to adjust the position on the pin.

c) remove the pulley cover and the head cover to obtain a good access for this adjustment. Switch off the air supply .

d) disconnect the air tube ❻ from the cylinder.

e) loosen the nut ❼ and turn the cylinder ❽ as necessary.

Turning clockwise the pin is extended.

Tighten the nut ❼ when the correct measurement is obtained.

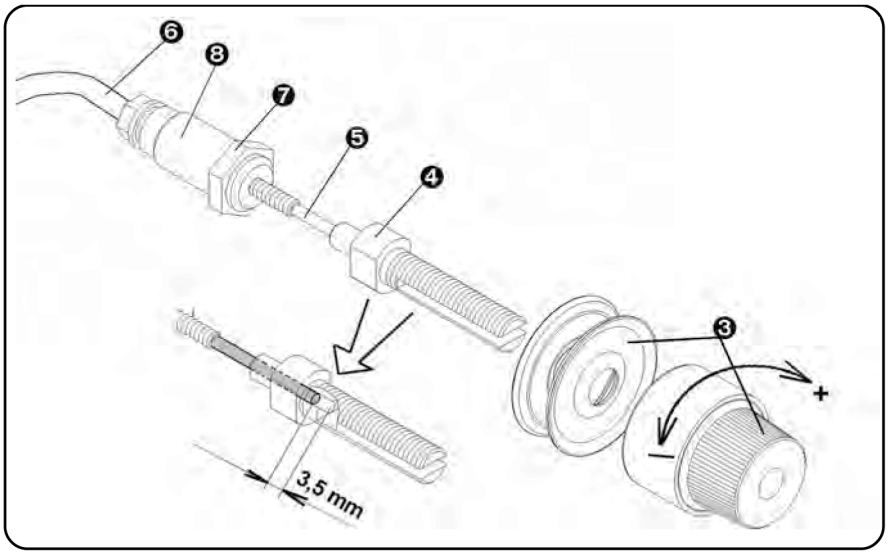

f) connect the air tube ❻ to the cylinder, open the air supply and install the covers.

15.3. Regulation of the tension discs opening

If the last stitch is not tightened, follow the below mentioned steps:

a) loosen the locking nut ❾ on the speed controller ❿

b) to obtain better tightening of the last stitch, tighten screw ⓫ and lock the nut ❾ securely.

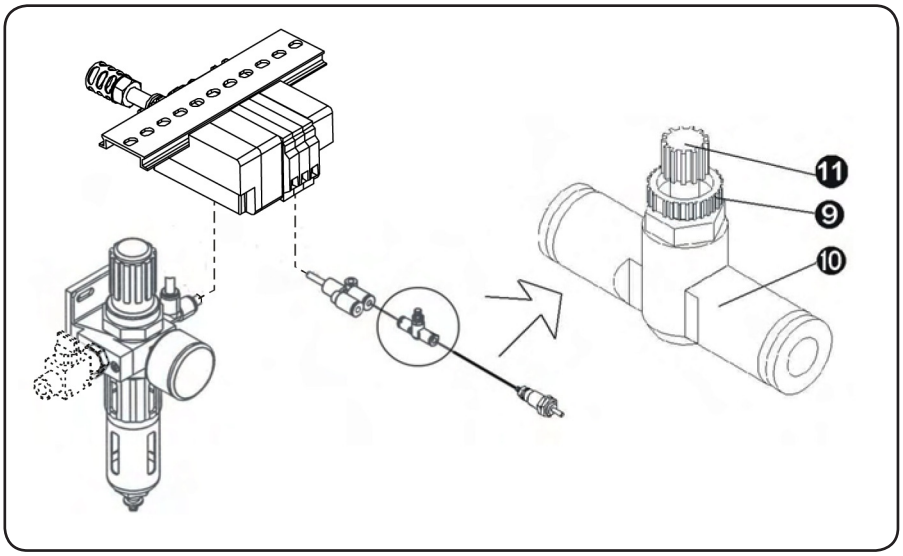

E - STANDARD MACHINE ADJUSTMENT

16. THREAD TRIMMING

The trimming mechanism ensures the correct thread trimming after sewing the last stitch. The trimming hook moves in the direction of the arrow, both thread loop legs A and B are pulled forward. When the thread hook approaches the end of the stroke, leg A contact the trimming knife, cutting the thread.

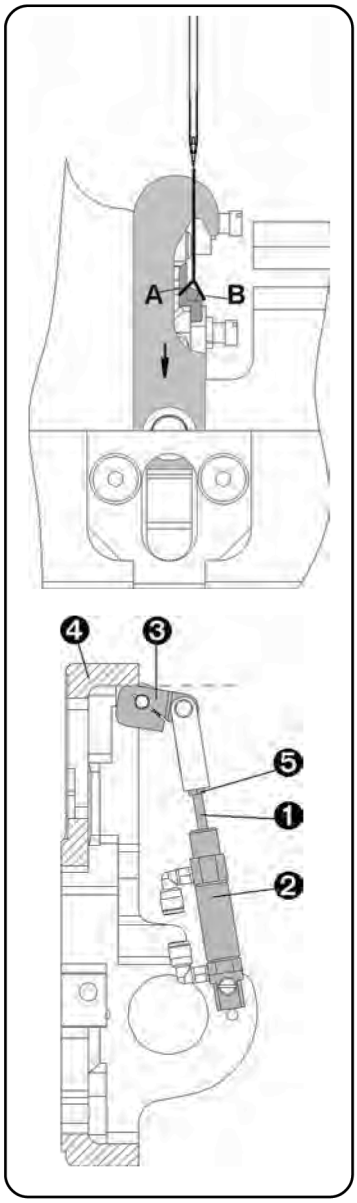

16.1. Trimming cylinder adjustment

a) tilt the machine head onto the rest pin and close the air supply.

Extend the piston ❶ of the cylinder ❷ to the maxi mum position.

b) check to be certain that the cylinder does not push the lever ❸ too high and into contact with the bedplate casting ❹. If no clearance exists, adjust as described in c, d, and e below:

c) loosen the screw ❻.

d) to obtain the correct position of the lever ❸ , loosen the nut ❺ and turn the cylinder piston ❶ in or out as needed

e) tighten the nut ❺ and the screw ❻. After this adjustment check if no axial clearance exists on the shaft ❼.

f) if the axial clearance exists on the shaft, loosen the screw ❻, move the shaft ❼ to the left so that the locking ring ❽ touches the recess in the plate ❸. Move the lever to the right and tighten the screw ❻.

16.2. The trimming hook adjustment

a) push the piston ❶ of the trimming cylinder ❷ to the maximum position and loosen the screw ❾ of the trimming actuator ❿.

b) turn the trimming actuator ❿ and set the clearance 1.0 mm between the throat plate and the point of the trimming hook.

c) tighten the screw ❾ of the trimming actuator ❿.

d) open the air supply and check by switching the valve of the trimming cylinder if the actuator ❿ does not hit the bedplate casting.

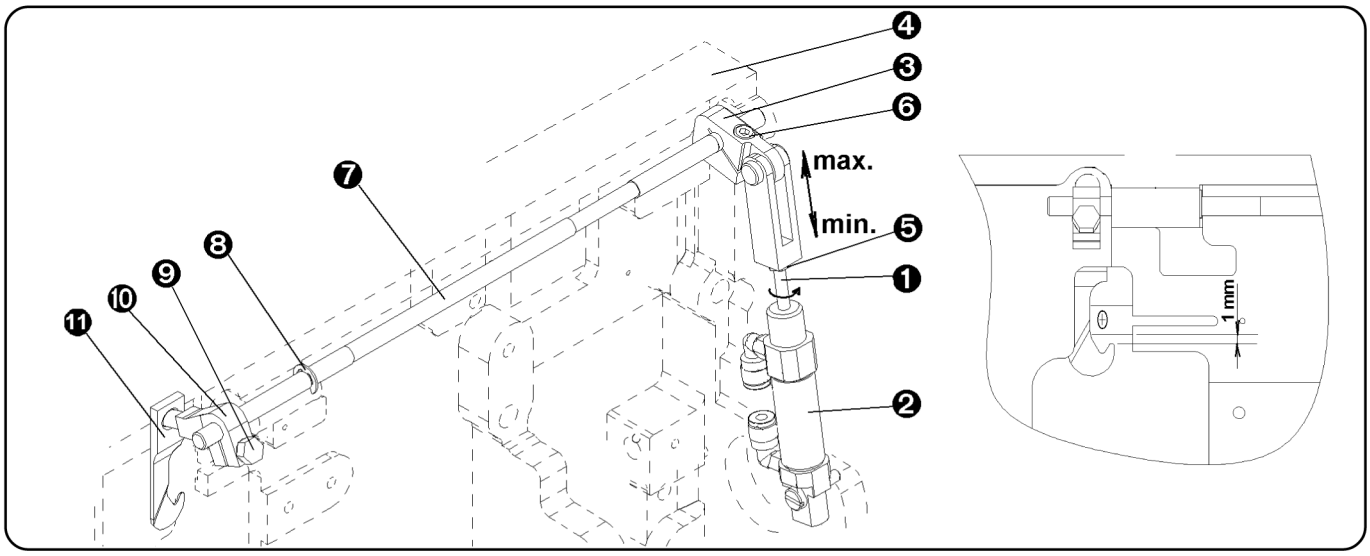

Released: 01/2022
E-mail: info@amfreece-cars.cz

E - STANDARD MACHINE ADJUSTMENT

17. THE HOLD DOWN ADJUSTMENT

(S-4000 LS modification only)

1. It is necessary to adjust the hold down ❸ by loosening the screw ❶, if:

   a) the hold down is not in the centre of the clamp foot groove

   b) the needle puncture ❹ is not in the hold down groove or if the distance **X** between the needle puncture and the hold down groove is not the same on both sides - see picture **A**.

2. If a clearance exists between the hold down and clamp foot, loosen the screw ❷ and move the hold down downwards. There must not be any clearance between the hold down and clamp foot.

Note: It is necessary to check the adjustment mentioned in point 1 after this adjustment.

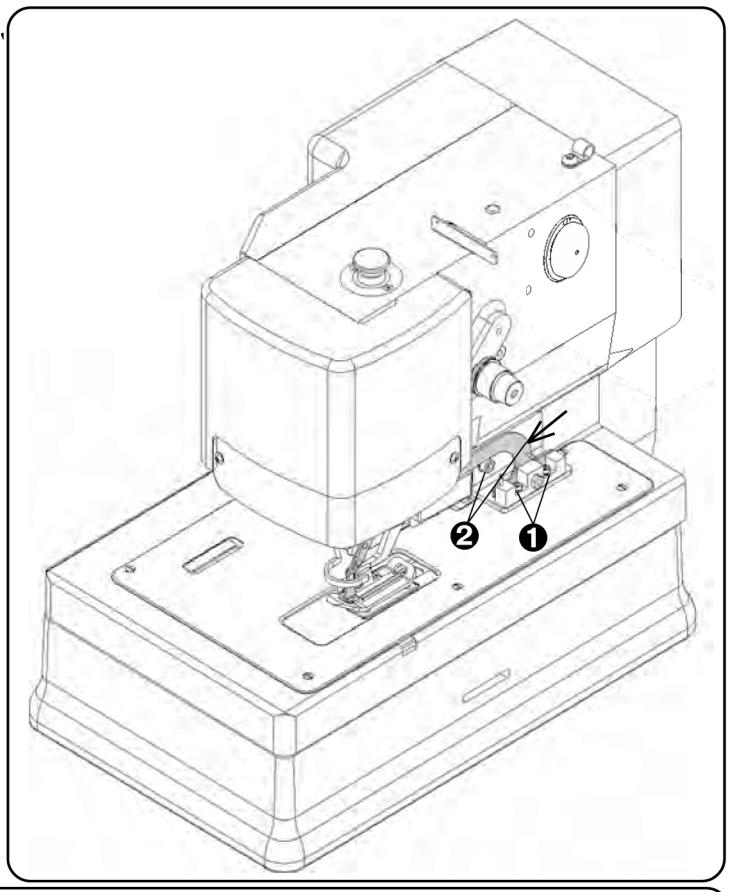

Picture **A**

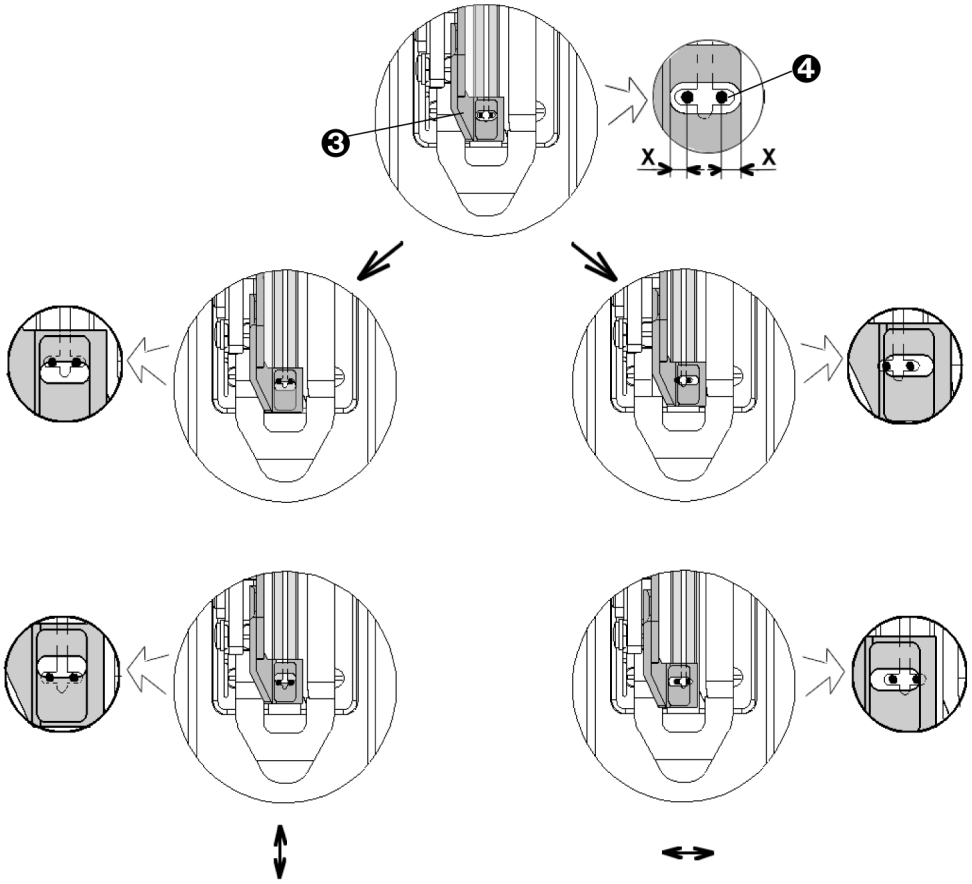

E - STANDARD MACHINE ADJUSTMENT

18. ADJUSTMENT OF THE STOPPING SENSOR POSITION

Follow the steps described below to set the position of the sensor.

1. Put machine in the service mode (see E2).
2. Turn the handwheel counter clockwise until the stop disk finger ❶ is perpendicular to the sensor ❷.
3. Loosen the screws ❸ and move the sensor bracket ❹ to the right. Tighten the screws ❸.
4. Loosen M3 screw ❺ and adjust the sensor position so that the stop disk finger ❶ is in the center of the sensor mark ❻. The red LED ❼ illuminates on the sensor.
5. Tighten the M3 screw ❺.
6. Return the machine head back to the working position.
7. Push the F6 key on the control panel and switch the machine to the working mode.
8. Start the machine and check the correct stopping of the machine. The needle bar must stop in the home (upper) position.

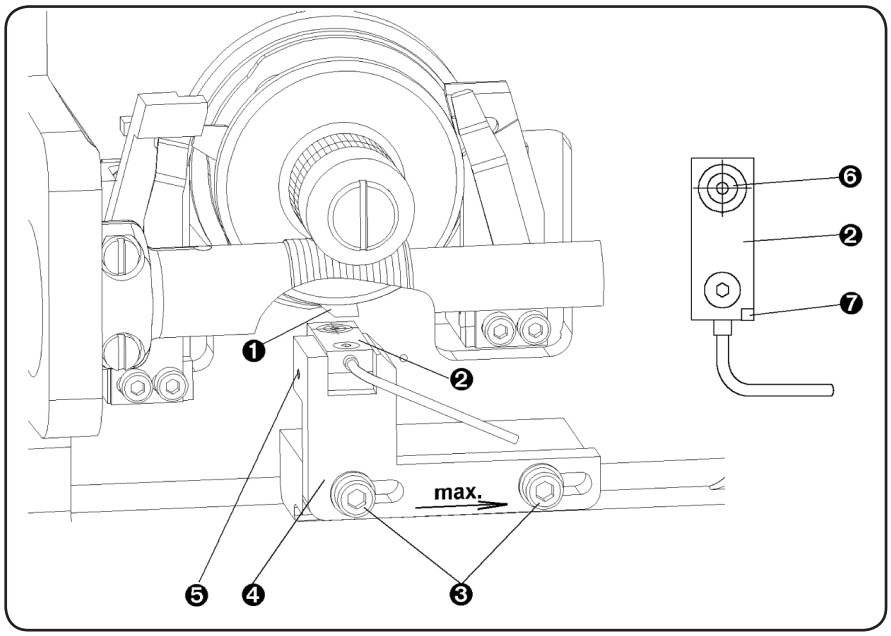

Released: 01/2022
E-mail: info@amfreece-cars.cz

E - STANDARD MACHINE ADJUSTMENT

19. CHANGING THE DRIVE BELT

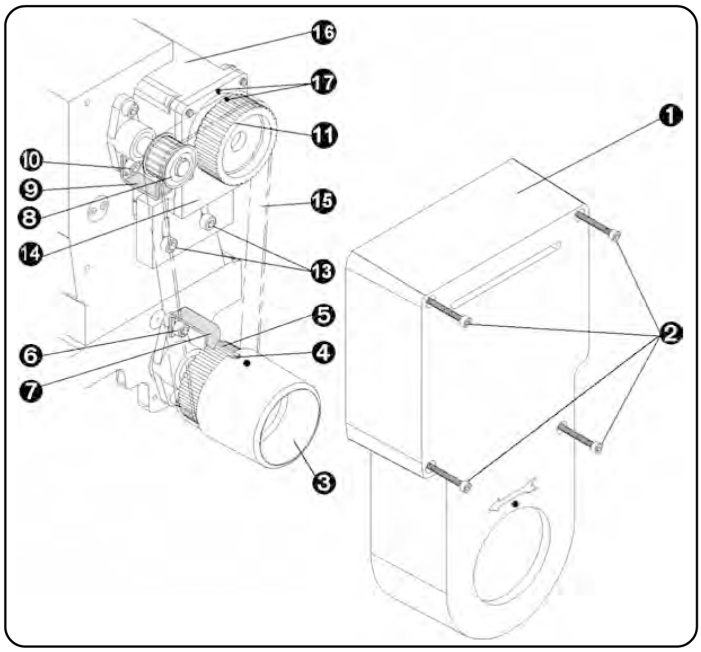

1. Remove the pulley cover ❶ after loosening the M4 screws ❷.
2. By turning the handwheel ❸ adjust the position of the shaft so that the screw ❹ on the pulley ❺ is aligned with screw ❻ on the bearing carrier lower shaft.
3. Lock the positi on by the holder 24.0030.0.000 ❼, which is included in the accessories. Using the screw ❻ fix the holder to the bearing holder upper screw.
4. Turn the pulley ❽ of the needle bar shaft, until the needle bar reaches the upper position.
5. Lock the position by the holder 24.0024.0.000 ❾, which is included in the accessories. Using the screw ❿ fix the holder to the bearing carrier lower mounting screw.
6. Rotate the motor pulley ⓫ until the marks ⓱ on the motor pulley and the motor bracket are aligned.
7. Loosen the screws ⓭ on the motor bracket ⓮ and move the motor with the machine bracket down to fit the belt.
8. Fit the belt ⓯ on the shaft pulleys ❺, ❽ and motor pulley ⓫. To tighten the belt ⓯, move the motor bracket ⓮ with motor ⓰ up. Tighten the screws ⓭ to lock the motor bracket. Be sure the marks ⓱ are aligned.
9. Remove the pulley holders ❼, ❾.
10. Press the pedal to check the adjustment. The needle bar must be i n the upper position.
11. Small changes of the needle bar adjustment are possible in the program parameters:

a) needle bar just before top dead centre
- ⓲ press => ⓳ „Ndl up pos ....imp“

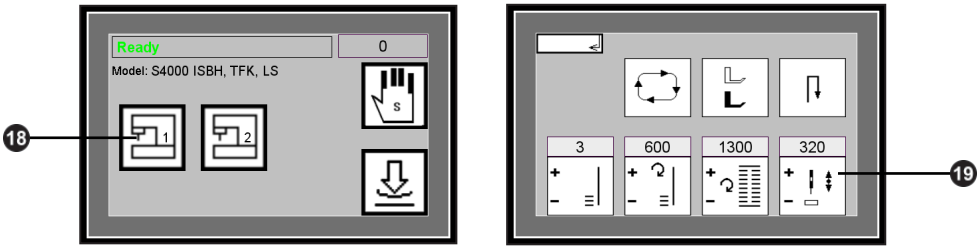

- increase the value to reach correct position of the needle bar

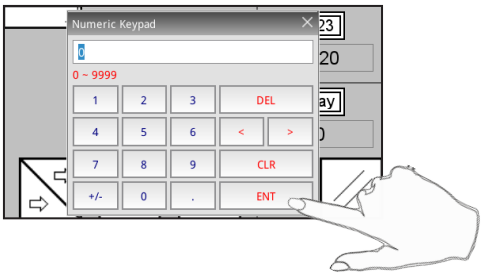

- press [↵], to go back to the operation mode

b) needle bar behind top dead centre
- reduce the value to reach correct position of the needle bar
- press [↵], to go back to the operation mode

E - STANDARD MACHINE ADJUSTMENT

20. VOLTAGE GUARD

The voltage guard - relay HRN-35 (VC1) as an extra accessories is placed in the machine control box. It is adjusted and sealed from a manufacturer. If the supply voltage is in the ***required range,*** the ***green*** LED ***Un*** indicates it on the voltage monitoring relay. If the upper limit (255V) of the supply voltage is exceeded, the ***red*** LED **U≷** indicates it. If the supply voltage is lower than 185V , the ***green*** LED stops indicating and the ***red*** LED **U≷** indicates it. If the supply voltage returns to the required range, the ***red*** LED stops indicating.

The upper limit (255V) is exceeded

a) When the power switch is switched to the position **1**, the red LED **U≷** lights. The power supply is disconnected, the display is not light and ***it is not possible to switch the machine on***.

b) If the supply voltage is higher than the upper limit during a sewing, the machine is automatically switched off to prevent control electronics damage. When the voltage level is restored to acceptable levels (185 - 255V), it is possible to start the machine in the standard way (see section **C1**).

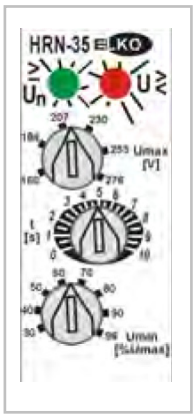

The supply voltage is below the lower limit 185V

a) If the supply voltage is below the lower limit 165V , the message „LOW VOLT AGE“ appears on the display.

b) If the supply voltage drops below the lower limit during the sewing, the machine automatically stops and the „LOW VOLTAGE“ message appears on the display.
When the voltage level i s restored to acceptable levels (185-255V), it is possible to start the machine in the standard way (see section C1).

Released: 01/2022
E-mail: info@amfreece-cars.cz

F - MAINTENANCE

Warning: - Check for damage to electrical cables
- Check safety covers for damage and replace if needed immediately
- Keep your hands out of the sewing area
- Do not modify the machine in any way, which could eliminate safety parts
- Do not attach external lights or other devices to the machine´s electrical system

Caution: - Do not neglect periodic maintenance.
- If you have fault in electrical power supply, switch off the operating switch (circuit breaker).
- Do not damage, correct and remove safety labels.
- Do not work with the machine when you are under the influence of the drugs or alcohol.
- User has to ensure the lighting of the working area minimal 750 Luxes.

1. MACHINE CLEANING AND MAINTENANCE

1. Switch the power off and disconnect air supply.
2. For cleaning and oiling, remove the cover ❶ and take out the clamp foot mechanism ❷.

   Clean the clamping area of any fabric and thread lints.
3. Open the needle bar cover ❸ and clean any thread lints from the guides ❹ and thread tension ❺.
4. Clean any thread lints and fabric from the sewing area - throat plate, loopers.
5. Lubricate the machine according to the section F4.

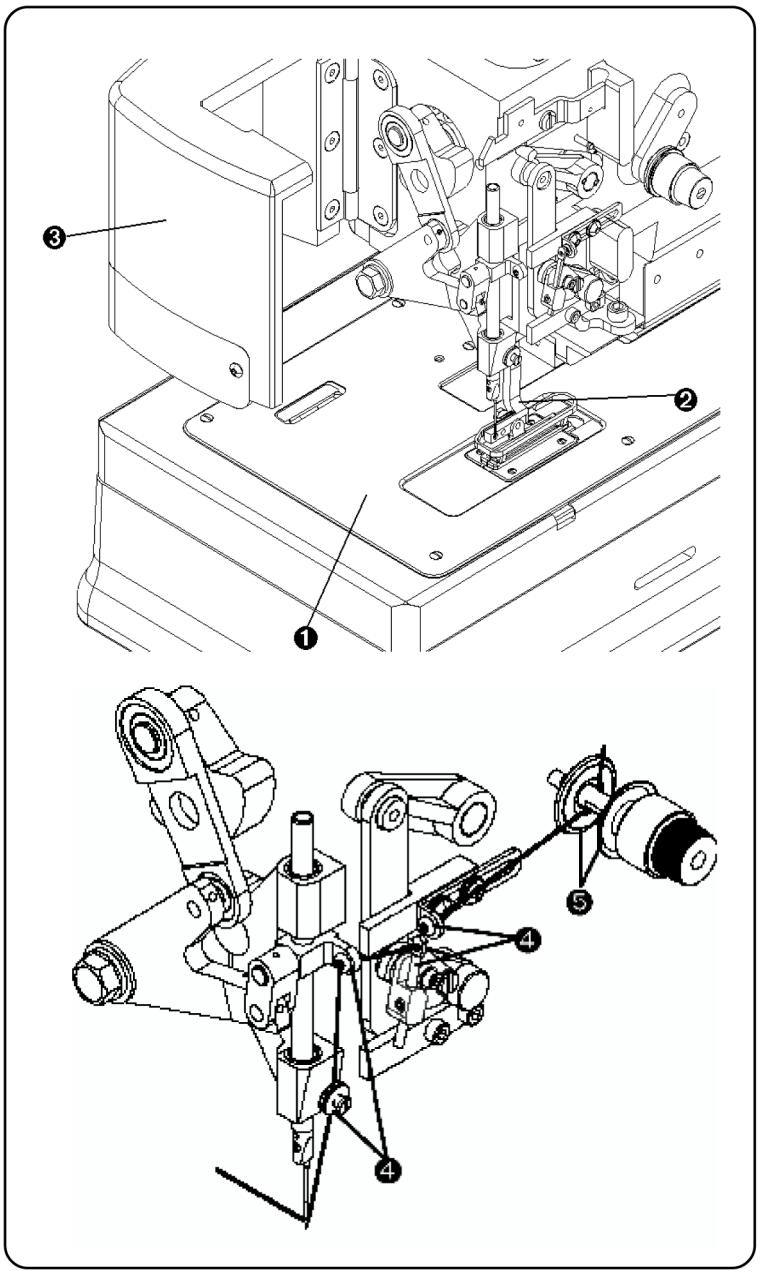

F - MAINTENANCE

6. Remove the filter cover ❻ with cleaning pad ❼.

   Remove the dust from the cleaning pad or in case of considerable dirt, wash it using a mild detergent.

   Perform the same cleaning on the rear fan.

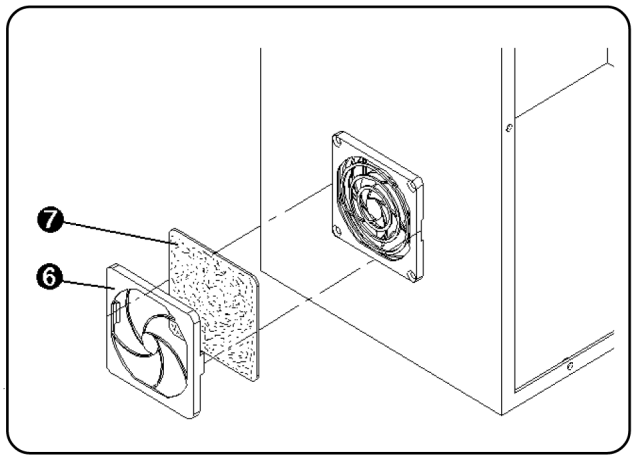

7. The filter and regulator maintenance

   Bowl assembly ❽ - polycarbonate bowls may be damaged and possibly fail if exposed to synthetic oils, thinner solvents, trichlorethylene, kerosene and other aromatic hydrocarbons. Clean only with a neutral detergent .
   Auto drain - Drain line length should be shorter than 5 m. Be sure not to have any upward turns in the drain li ne which would prevent drainage.

   If the unit has no function it i s necessary to:

   a) check if the supplied pressure is higher than the set pressure of the regulator
   b) check if the valve assembly is clean
   c) check the membrane or spring for damage
   d) check if the air flow direction is correct

   Change of the filter element ❾
   Conditions

   • low flow rate
   • high pressure drop
   • when the pressure drops to 0.7 bar
   • filter element change after one year (in case it has not been changed)

   a) unscrew the polycarbonate bowl ❽
   b) take the filter element out ❾ with baffle ❿
   c) change old filter element with new one
   d) fit the baffle ❿ into new filter element ❾ and place them both back
   e) place the polycarbonate bowl back

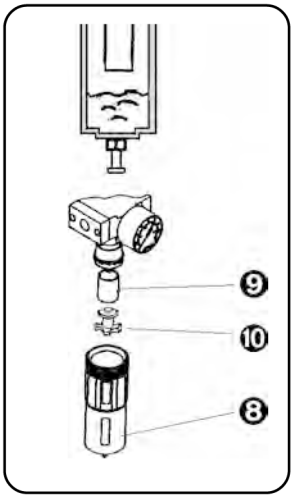

6. Check the mechanisms especially in the sewing area by sight.
7. When the maintenance and checking are finished, insert the clamp foot mechanism into the machine.

Released: 01/2022
E-mail: info@amfreece-cars.cz

F - MAINTENANCE

2. PERIODIC MAINTENANCE

once a day (8 hours of operation)
- cleaning of the sewing mechanism area and inner frame of the
- machine
- lubrication of mechanisms - see area **F4**.

once a week *(40 hours of operation)*
- visual check - external and internal mechanisms
- fill oil into reservoir with oil level indicator, or sooner if required

once a month (160 hours of operation)
- check of the clearance in sewing mechanism drive
- check of the screw connections tightening (obtain values below)
- check of condensate in regulator
- check of dirty of cleaning pads in control box

Recommended values for screws freeze (Nm)			
		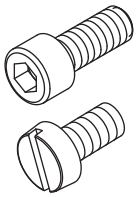	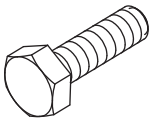
M3	0,5	0,6	0,8
M4	1,2	1,5	2,0
M5	2,5	3,0	4,0
M6	4,0	5,0	7,0
M8		8,0	16,0
M10		10,0	30,0

F - MAINTENANCE

3. LUBRICATION DIAGRAM

The machine is mainly equipped with needle and ball bearings, which in combination with a single lubrication circuit decrease the requirements for maintenance.

Circuit I - with the oil supply in oil indicator for lubrication of the bite, feeding and looper levers and worm gears. In case of replacement of any part of di stribution, it is possible to order the tube kits and wicks. To connect the tubes - see picture.

Circuit I

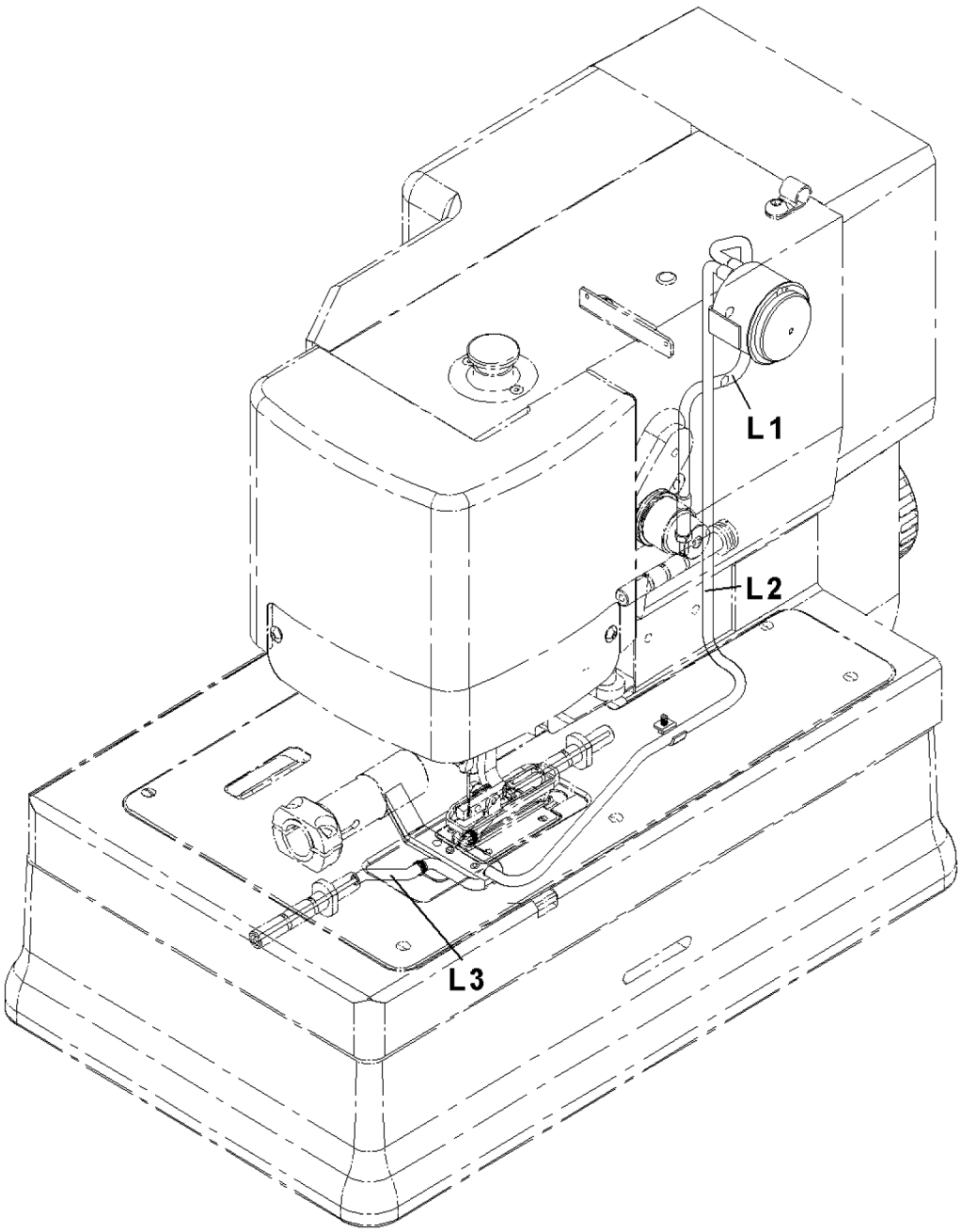

Released: 01/2022
E-mail: info@amfreece-cars.cz

F - MAINTENANCE

4. MACHINE LUBRICATION

1. It is necessary to lubricate the places shown below before the machine is switched on for the first time or after a long idle period. Use oil ESSO TERESSO 32 or similar quality .
2. The amount of oil in the reservoir ❶ is indicated by the red mark. Too much oil may cause it to overflow from the base area.
3. The reservoir is filled through the hole ❷ in front of the gauge.
4. The points for lubrication of the needle bar mechanism ❸ and draw-off mechanism ❹ are shown in the illustration below (after opening the needle bar cover ❺). Lubricate the main cam worm gear through the hole ❻. Lubricate all of these points every 8 hours.

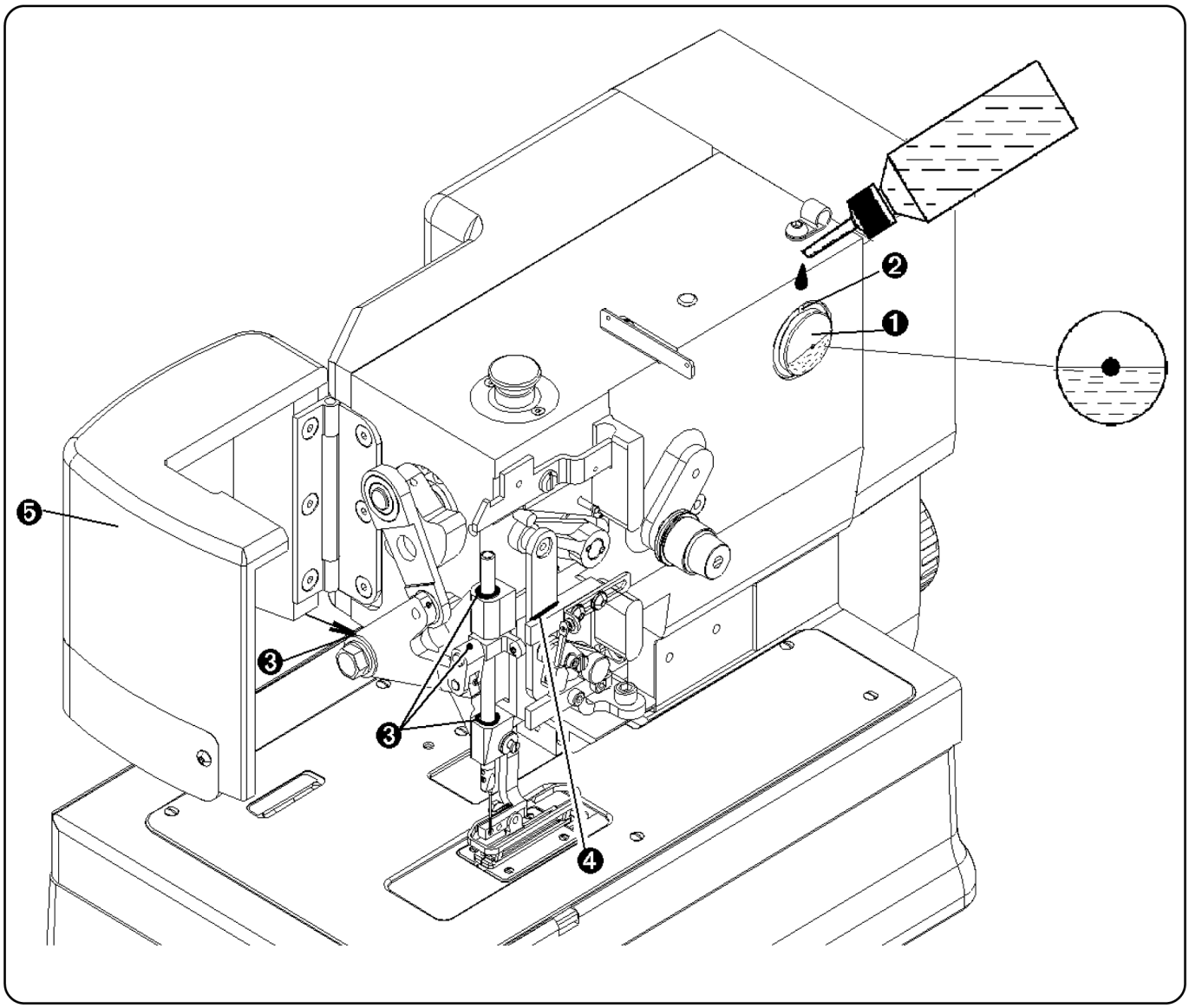

F - MAINTENANCE

5. Tilt the machine head on the rest pin and lubricate the places shown in the picture.

❼ Looper shafts
❽ Shifter
❾ Bevel gears
❿ Looper cam surfaces
⓫ Feed cam surfaces
⓬ Bite cam surfaces
⓭ Trimmer shaft

6. After lubrication it is important to sew minimum 10 buttonholes on scrap fabric to dispel any excess oil. Wipe all visible excess oil from the mechanism in the work area.

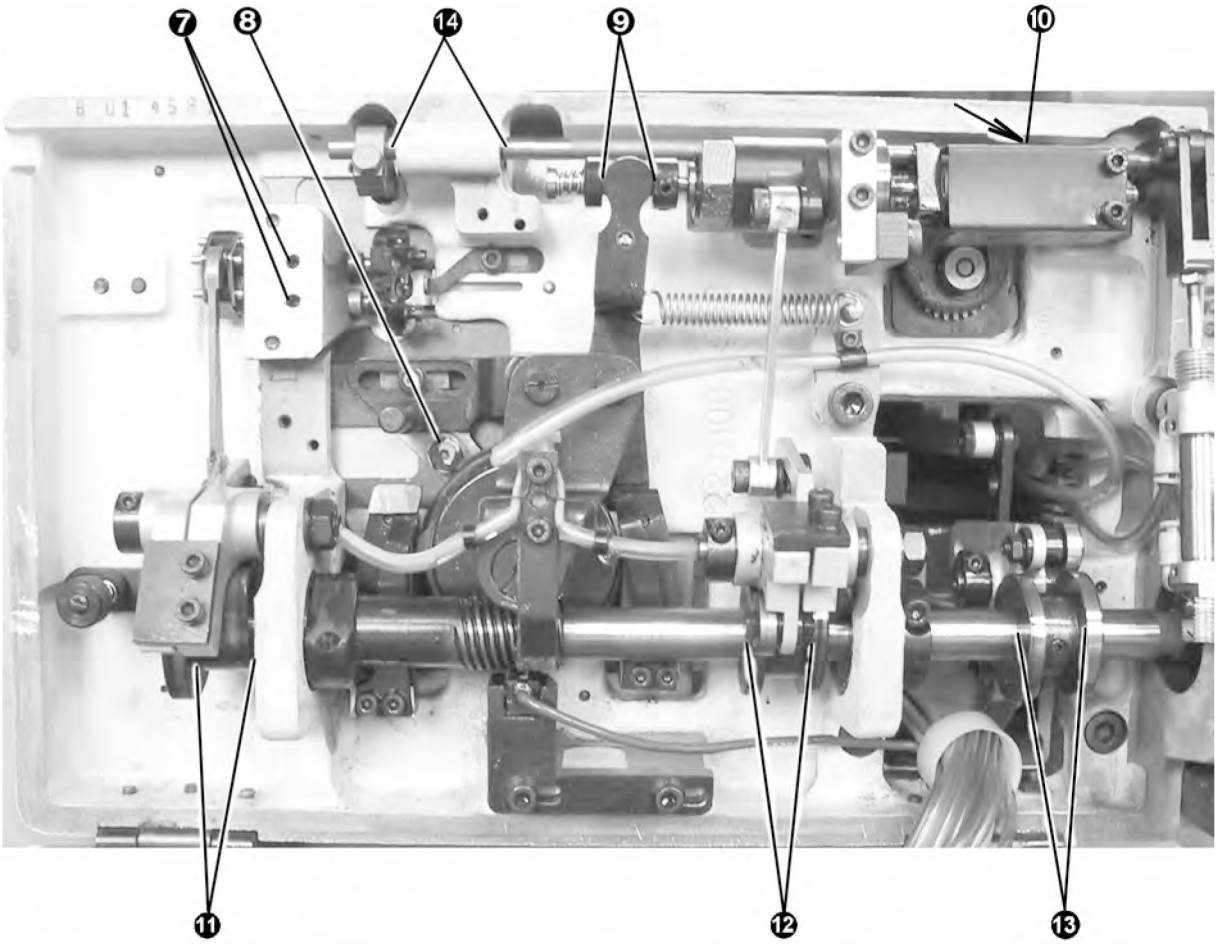

Released: 01/2022
E-mail: info@amfreece-cars.cz

F - MAINTENANCE

5. MACHINE DISPOSAL

1. To ensure machine ecological disposal, it is necessary to remove nonmetallic parts from the machine. To take these parts out, it is necessary to perform the partial dismantling of the machine, remove covers, dismantle the machine arm and remove the frame.
2. Aluminium and diralumin parts must be treated separately, also nonferrous metal parts and plastic parts.
3. Parts mentioned in point 2 can be found in the spare parts manual with these marks:

●	aluminium parts
●●	non-ferrous metal parts
●●●	plastic and non-metalic parts

G - PNEUMATIC DIAGRAM

S4000 TKF, LS - Pneumatic diagram

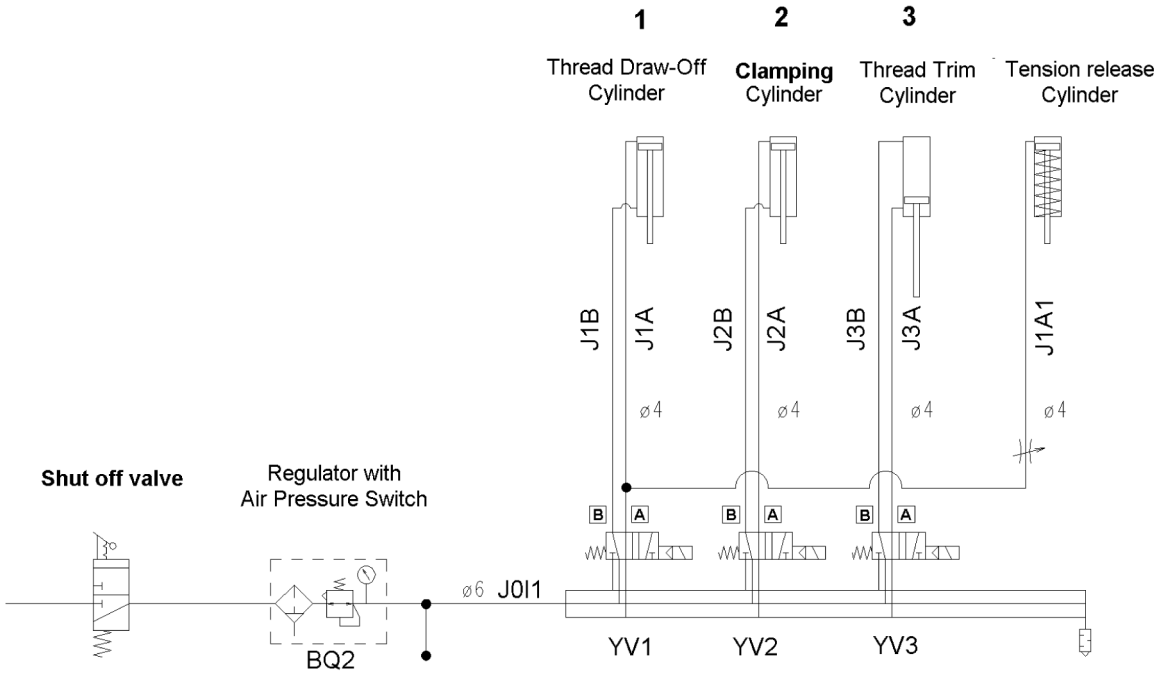

Released: 01/2022
E-mail: info@amfreece-cars.cz

H - ELECTRICAL DIAGRAM

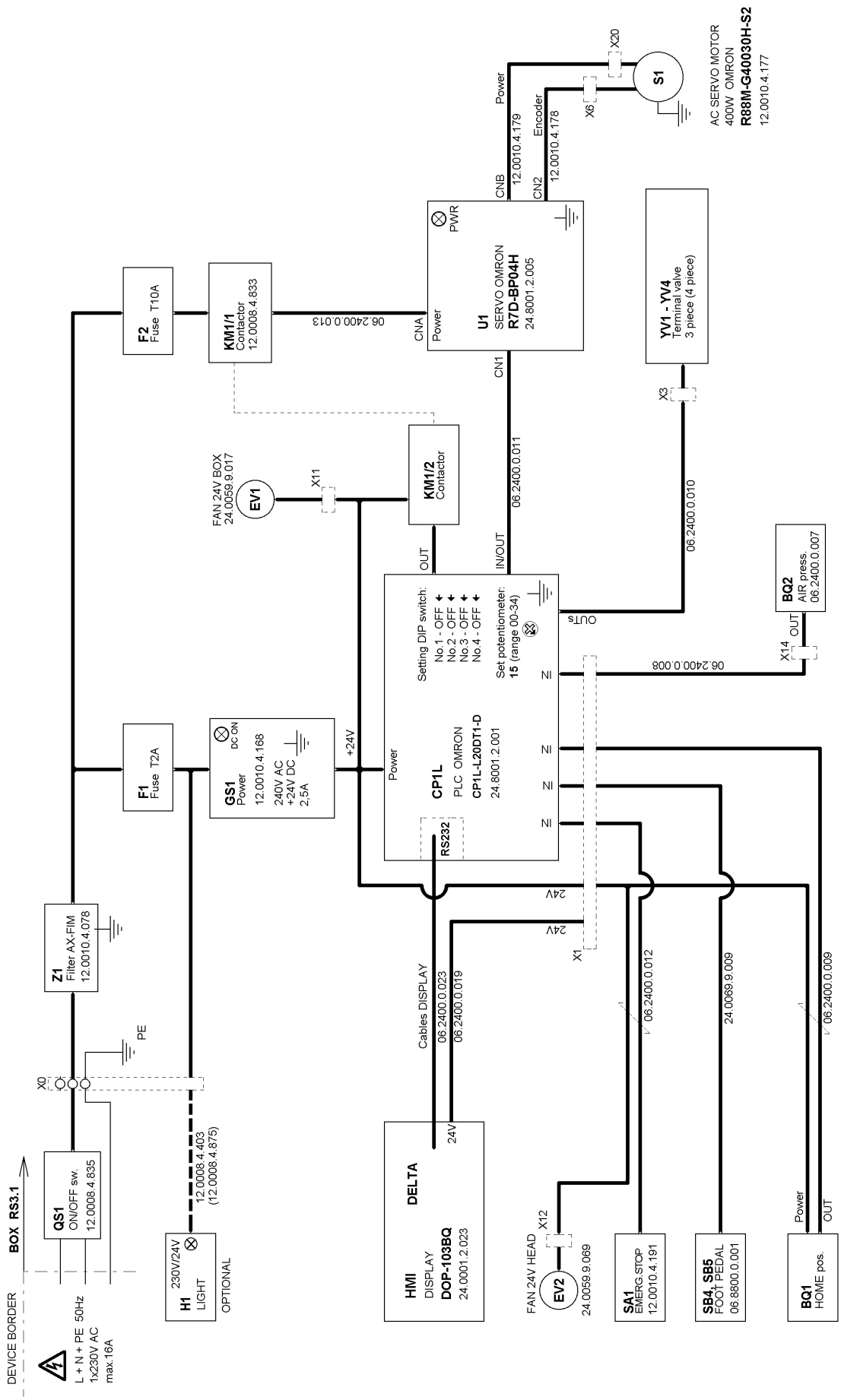

H - ELECTRICAL DIAGRAM

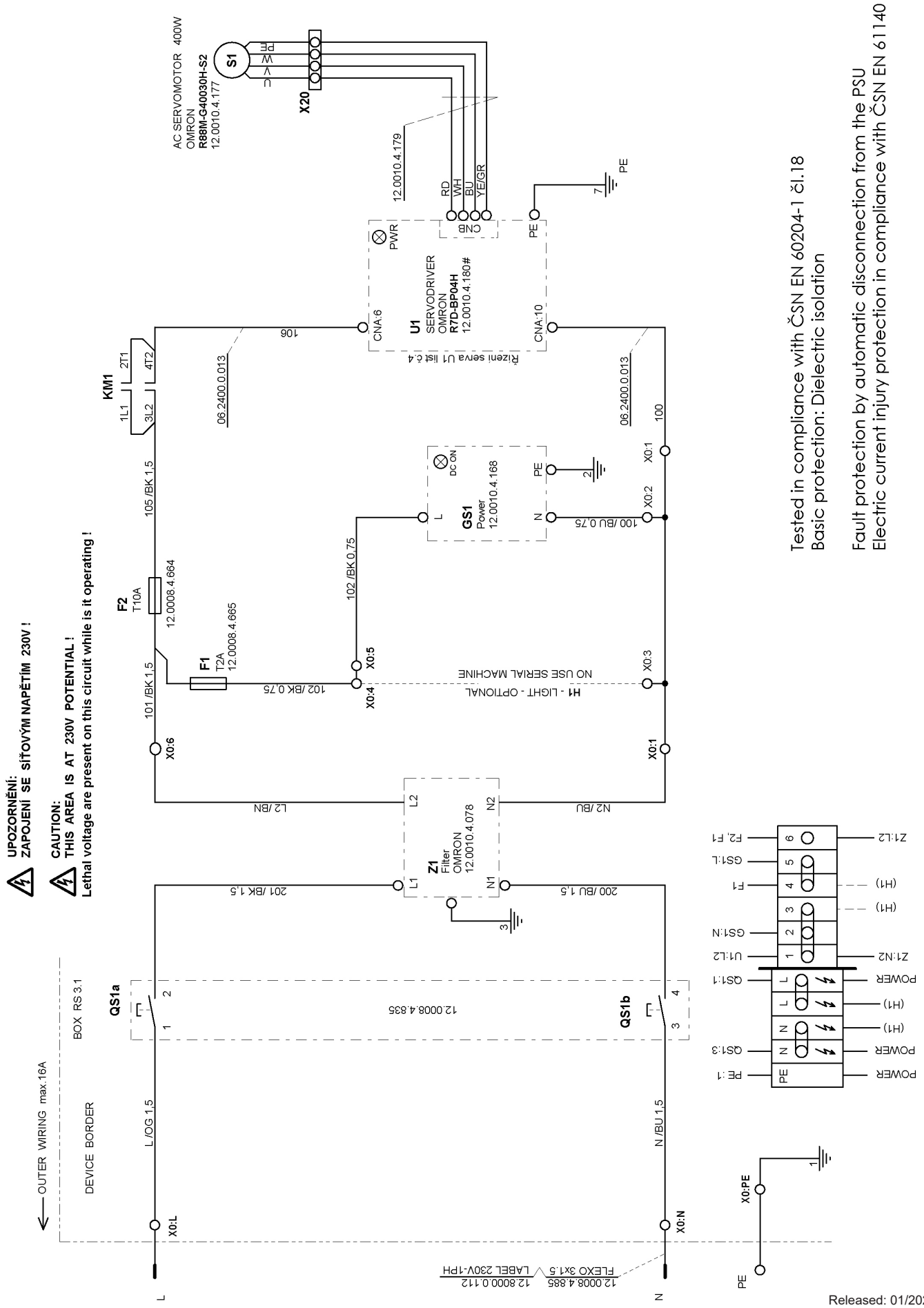

Tested in compliance with ČSN EN 60204-1 čl.18
Basic protection: Dielectric isolation

Fault protection by automatic disconnection from the PSU
Electric current injury protection in compliance with ČSN EN 61140

Released: 01/2022
E-mail: info@amfreece-cars.cz

H - ELECTRICAL DIAGRAM

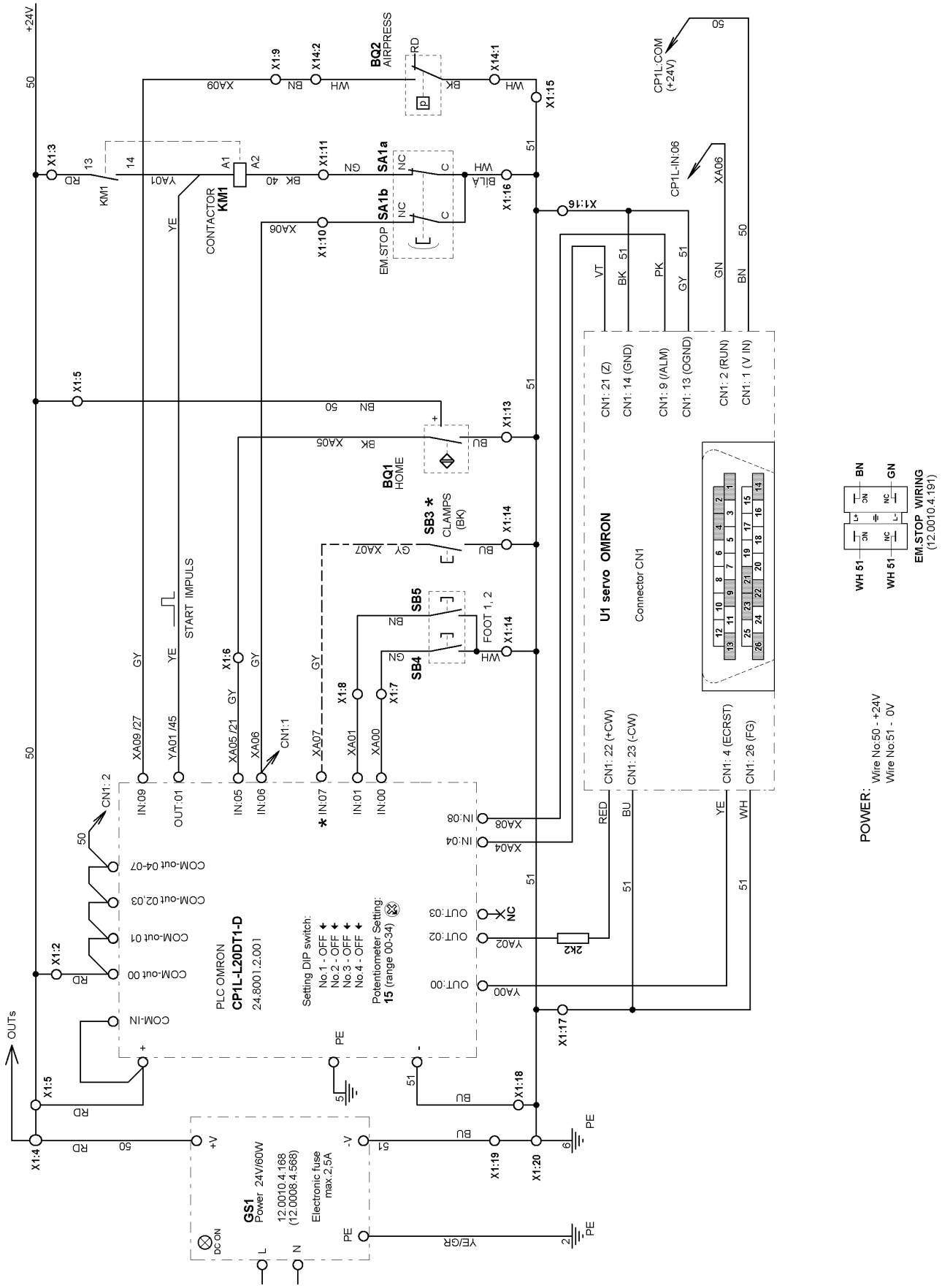

H - ELECTRICAL DIAGRAM

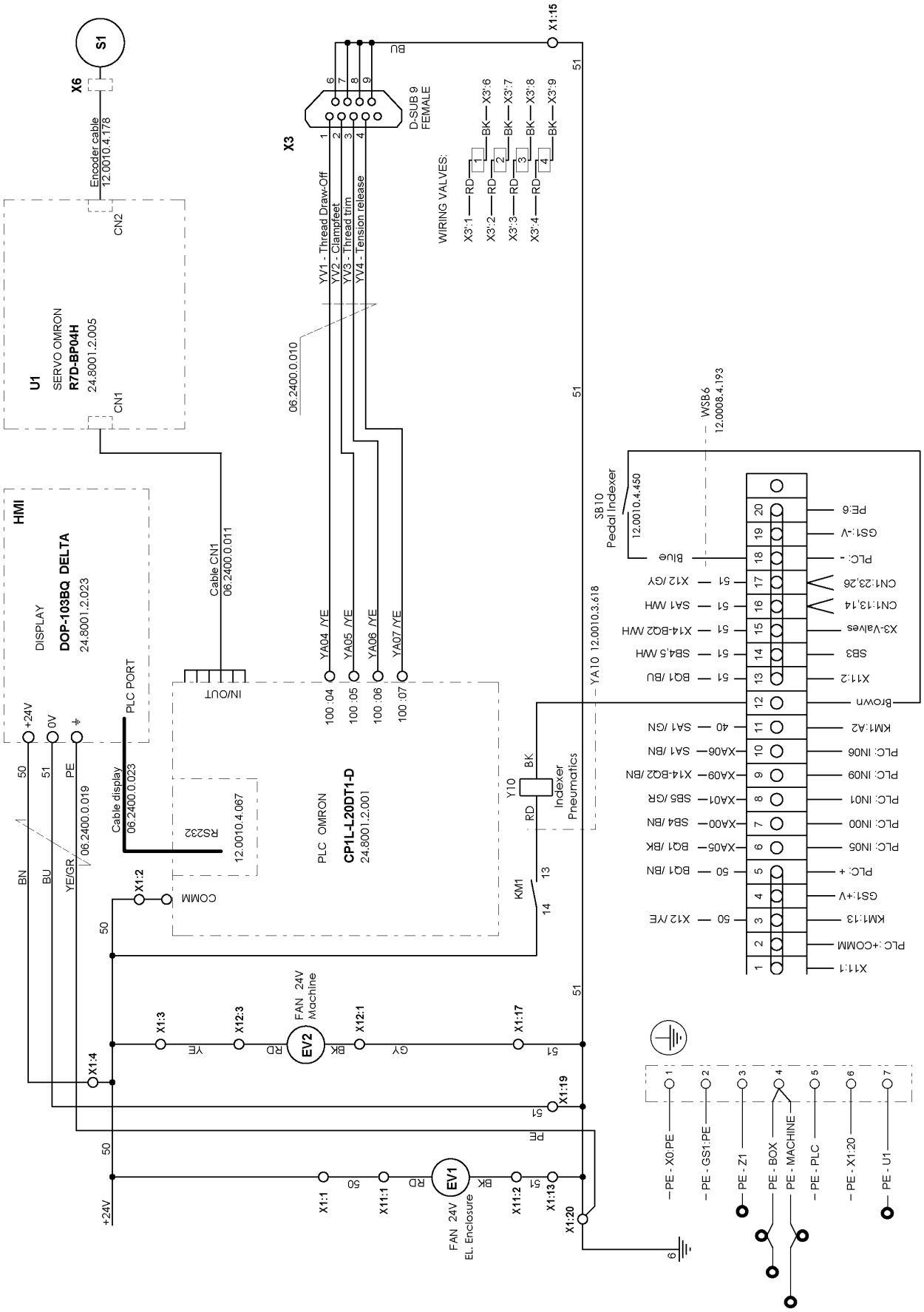

Released: 01/2022
E-mail: info@amfreece-cars.cz

H - ELECTRICAL DIAGRAM

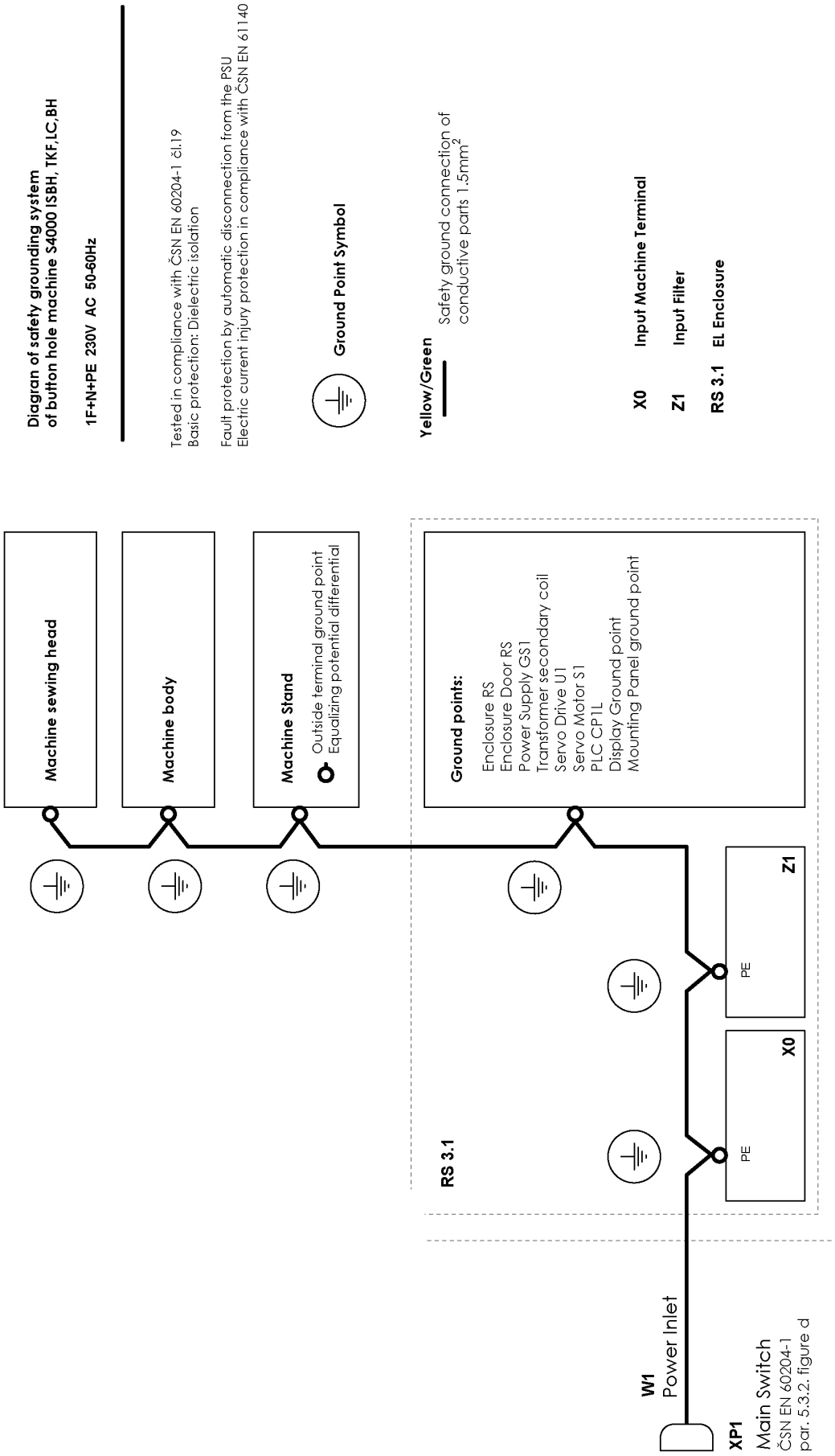

TROUBLESHOOTING

TABLE OF CONTENTS

1. MECHANICAL FAULTS 2-2
2. CONTROL PANEL DISPLAY ERROR MESSAGES 2-5
3. SERVO ERROR MESSAGES 2-6
4. ELECTRICAL FAULTS 2-7

TROUBLESHOOTING

SYMPTOM	POSSIBLE CAUSE	PROBABLE SOLUTION
Thread breakage	Needle, looper, throat plate damaged	Change damaged parts
	Incorrect needle and sewing mechanism adjustment	Check the adjustment of the mechanisms
	Thread tension is too tight	Adjust correct tension
	Incorrect threading	See section C3 for checking.
	Thread guides polished incorrectly	Polish
	Poor thread quality	Replace thread
	Thread is too heavy for selected needle and throat plate	Use recommended thread sizes - see section A4
Machine fails to sew (missing stitches appear)	Needle, looper, throat plate damaged	Change damaged parts
	Incorrectly adjusted needle bar height	See section E4 for checking
	Incorrectly adjusted clearance between needle and throat plate	See section E5 for checking
	Incorrect loopers timing	See section E9 for checking
Machine sews in one spot	Incorrectly adjusted the home position of the clamp plate	Adjust the stop - see section E10

Revised: 01/2022
E-mail: info@amfreece-cars.cz

TROUBLESHOOTING

SYMPTOM	POSSIBLE CAUSE	PROBABLE SOLUTION
Stitch skip at the beginning of sewing	Needle, looper, throat plate damaged	Change damaged parts
	Needle thread end is too short	See section E14, point 2
	Incorrectly adjusted needle bar height	See section E4
	Incorrectly adjusted clearance between needle and throat plate	See section E5
	Incorrect loopers timing	See section E9
	Incorrectly adjusted clamp feet pressure	See section E 14, point 3
	Incorrectly adjusted the home position of the clamp plate	See section E10
Stitch skip during sewing	Needle, looper, throat plate damaged	Change damaged parts
	Incorrectly adjusted needle bar height	See section E4
	Incorrectly adjusted clearance between needle and throat plate	See section E5
	Incorrect loopers timing	See section E9
	Incorrect thread tension adjustment	Adjust the tension correctly
	Incorrect threading	See section C3
	Thread loops are too small	See section E14 point 3
	Incorrectly adjusted clamp feet pressure	See section E14 point 3
	The clamp feet are adjusted too far from the sewing	See section E13 point 2

TROUBLESHOOTING

SYMPTOM	POSSIBLE CAUSE	PROBABLE SOLUTION
Thread not trimmed at the end of the cycle	Trimming knife damaged	Replace the knife
	Low air pressure at trimming cylinder	Check supply pressure
	Flow control valve to tension cylinder closed	See section E15 point 3
	Incorrect loopers timing	See section E9
	Incorrect setting of trimming delay	Change Trim dly parameter - D4
	Trimming length incorrectly set	Change Trim tim parameter - D4
Sewing motor turns, machine does not sew	Belt broken or loose	See section E19 for changing
Machine sews continually, does not stop	Stopping sensor adjusted incorrectly	See section E18 for correct position adjustment
Zero pressure on regulator	Shut off valve closed	Open the shut off valve
Low air pressure	Filter element dirty	Clean the filter element
	Air fitting or tubing obstruction	Check supply guides
Noise heard from deflate screw	Deflate screw is loose	Tighten or replace

Revised: 01/2022
E-mail: info@amfreece-cars.cz

TROUBLESHOOTING

SYMPTOM	POSSIBLE CAUSE	PROBABLE SOLUTION
Low air pressure	Hand valve of the regulator switched off	Open the hand valve
	The air pressure in the air supply piping below 0.5 MPa	Increase the air pressure
Emergency stop, red LED light is ON	Emergency Stop button is switched on	Release the Emergency Stop button and press F6 key on the control panel
Service mode	The machine is in the operation mode, motor is disconnected	Press F6 key on the control panel
Low voltage	The power supply is below 185V - relay HRN-35 is installed	Call electroengineer in a plant
Motor isn‘t ready	The power supply is below 185V - relay HRN-35 is not installed	Call electroengineer in a plant

3. ERROR MESSAGES OF THE SERVO

The following messages can be seen on the servo display, which is placed inside the control box. In order to eliminate these messages, switch off the machine for 5 minutes. Then switch the machine on again. The error message should not appear on the display. If the message appears - call AMF Reece service.

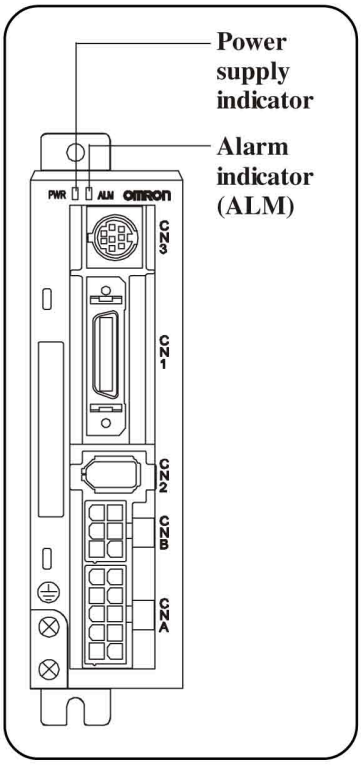

PWR - Power supply indication:

INDICATOR	STATUS
Lit green	Voltage is good
Lit orange - Flashes at a 1 sec. intervals	Varning - i.e.: - Exceeded power - Exceeded feed back - Default of inner fan
Lit red	Alarm - default

ALM - Default indication (Alarm indicator):

in case default appears, the indicator is switched on.

Alarm indicator on the Servo Drive

The alarm LED indicator on the front of the Servo Drive lights up if an error is detected. The indicator shows the alarm code by the number of orange and red flashes.

Example:
When an overload alarm (alarm code 16) has occurred and the Unit has stopped the indicator will flash in orange and 6 times in red.
Orange 10s digit, Red: 1s digit

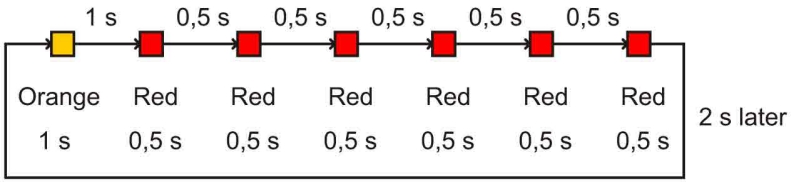

TROUBLESHOOTING

Alarm code	Error detection function	Detection details and cause of error	Alarm reset possible
11	Power supply undervoltage	The DC voltage of the main circuit fell beloww the specificed value while the RUN Command Input was ON	Yes
12	Overvoltage	The DC voltage of the main circuit is abnormally high	Yes
14	Overcurrent	Overcurrent flowed to the IGBT. Servomotor power line ground fault or short circuit	No
15	Built-in resistor overheat	The resistor in the Servo Drive is abnormally overheating	No
16	Overload	Operation was performed with torque significantly exceeding the rated level for several seconds to several tens of seconds.	Yes
18	Regeneration overload	The regeneration energy exceeded the prosessing capacity of the regeneration resistor.	No
21	Encoder disconnection detected	The encoder wiring is disconnected.	No
23	Encoder data error	Data from the encoder is abnormal.	No
24	Deviation counter overflow	The number of accumulated pulses in the deviation counter exceeded the seting in the Deviation Counter Overflow Level (Pn63)	Yes
26	Overspeed	The servomotor exceeded the maximum number of rotations. If the torque function was used, the Servomotor´s rotation speed exceeded the settings in the Overspeed Detection Level Setting (Pn70 and Pn73)	Yes
27	Electronic gear setting error	The section in Electronic Gear Ratio Numerator 1 (Pn46) or Electronic Gear Ratio Numerator 2 (Pn47) is appropriate.	Yes
29	Deviation counter overflow	The number of accumulated pulses for the deviation counter exceeded 134,217,728.	Yes
34	Overrun limit error	The servomotor exceeded the allowable operating range set in the Overrun Limit Setting (Pn26).	Yes
36	Parameter error	Data in the parameter saving area was corrupted when data was read from the FEPROM at power ON.	No
37	Parameter corruption	The checksum didn´t match when data was read from the FEPROM at power ON.	No
38	Drive prohibit input error	The forward drive prohibit and reverse drive prohibit inputs are both turned OFF.	Yes
48	Encoder phase Z error	A phase-Z pulse was not detected regularly	No
49	Encoder CS signal error	A logic error of the CS signal was detected	No
95	Encoder CS signal error	The combination of the Servomotor and Servo Drive is not appropriate. The encoder was not connected when the power supply was turned ON.	No
96	LSI setting error	Excessive noise caused the LSI setting not to be completed properly.	No
Others	Other errors	The servo Drive´s self-diagnosis function detected an error in the Servo Drive.	No

4. ELECTRICAL FAULTS

SYMPTOM	POSSIBLE CAUSE	PROBABLE SOLUTION
When switch in position **I**, neither the work light, display or the cooling fan operate	No power supply	Check main power supply or voltage in the socket
	Fuse F1 failure	Replace fuse PN 12.0008.4.665
	Power switch QS1 damaged	Replace the switch 12.0008.4.835
	Power GS1 failure	Replace the power 12.0010.4.168
	The supply voltage is above 255 V - relay VC1 installed	Call electroengineer in the plant
	Relay VC1 failure	Replace the relay 12.0008.4.690
When switch in position **I**, display does not operate	Cable from the display disconnected	Check the display connection
	Display or its control damaged	Replace display PN 24.8001.2.002
When sewing operation started, motor does not operate. Contactor KM1 switched on.	Fuse F2 damaged	Replace fuse 12.0008.4.664
	Contactor KM1 damaged	Replace contactor 12.0008.4.833
	Servo U1 error or filter Z2 error	Call AMF Reece service or replace servo U1
	Error in sewing motor circuit	Switch the machine off for 1 minute, or restart it, alternatively call AMF Reece service
When the machine is switched on, incorrect type of the machine appear on the display (example: S4000 BH instead of S4000 ISBH, TKF, LS)	The PLC incorrectly set	Set the potenciometer on the PLC according to the electrical diagram - see service section, section H)

TROUBLESHOOTING

SYMPTOM	POSSIBLE CAUSE	PROBABLE SOLUTION
When sewing operation started, motor fails to operate. Contactor KM1 switched off.	Make sure the machine is ready for operation	Press key F6 - see D1, point 6
	Contactor KM1 damaged	Replace contactor 12.0008.4.833
	Check the Emergency Stop button	Replace button 12.0008.4.563
	Control unit PLC error	Replace the control unit PLC 24.8001.2.001
The needle does not stop in the upper position	Position of the sensor BQ1 incorrectly adjusted	Adjust according to section E18
	Sensor BQ1 failure	Replace the sensor 06.2400.0.009
	Check the servo amplifier and servo	To set the servo amplifier - call AMF Reece service, alternatively replace 12.0010.4.177 and 24.8001.2.005
When sewing operation started, air valves do no operate. The air pressure correct.	Fork is not fitted properly into connector X3	Check the connector X3 connection
	Control unit PLC error	Replace the control unit 24.8001.2.001

TABLE OF CONTENTS

NEEDLE BAR 3-2
CLAMPING 3-4
THREAD TRIMMER 3-6
SHIFTER MECHANISM 3-9
FEED MECHANISM 3-10
LOOPER MECHANISM 3-14
BASE 3-16
BITE MECHANISM 3-18
THREAD DRAW - OFF MECHANISM 3-20
MAIN CAM 3-22
HEAD ASSEMBLY 3-24
BEDPLATE 3-28
COVERS 3-30
LUBRICATION 3-32
TABLE CROSSWISE 3-34
TABLE PARALLEL 3-36
TABLE EMBEDDED — TKF 3-38
TABLE UNIVERSAL 3-40
ELECTRICAL — I 3-42
ELECTRICAL — I TABLE EMBEDDED 3-46
ELECTRICAL — II 3-50
ELECTRICAL — III 3-52
PANEL KIT 3-54
PNEUMATICS 3-56
ACCESSORIES — EXTRA PARTS 3-58
ACCESSORIES — CLAMPING 3-60
TABLE - ROLLER KIT - EXTRA PARTS 3-62

NEEDLE BAR

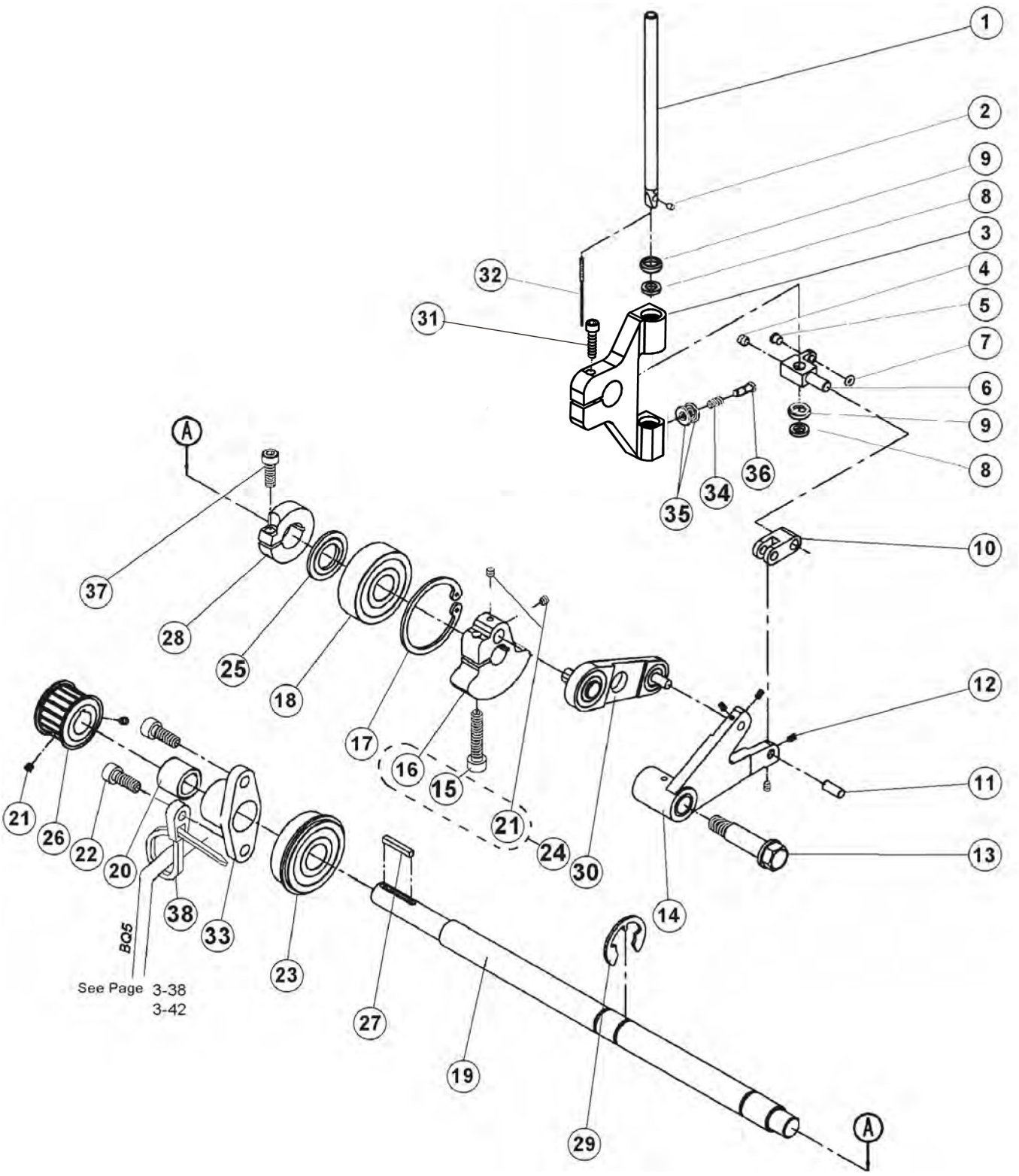
1
2
9
8
3
4
5
7
6
9
8
10
12
11
13
14
30
24
21
15
16
17
18
25
28
37
A
21
26
22
20
38
33
BQ5
See Page 3-38
3-42
23
27
19
29
A
31
32
35
34
36

NEEDLE BAR

DET	PART NUMBER	DESCRIPTION	QTY.
01	22.0195.0.000	Needle Bar	1
02	01.2193.0.000	4-60 Screw	1
03	24.0510.0.000	Needle Bar Holder ●	1
04	08.6400.5.005	M5 x 5 Set Screw	1
05	01.7447.1.000	Porcelain Guide ●●●	1
06	22.0520.0.000	Needle Bar Clamp	1
07	01.6551.0.000	Retaining Ring ●●●	1
08	22.0230.0.000	Cupped Washer ●●●	2
09	22.0239.0.000	Felt Washer	2
10	22.0530.0.000	Needle Bar Connecting Link	1
11	22.0542.0.000	Needle Bar Connecting Link Pin	1
12	08.6400.3.005	M3 x 5 Set Screw	4
13	22.0541.0.000	Needle Bar Shoulder Screw	1
14	22.0540.0.000	Needle Bar Connecting Link Pin ●●●	1
15	08.6000.6.030	M6 x 30 Screw	(1)
16	22.0525.0.000	Needle Bar Crank ●	(1)
17	01.7809.0.000	Retaining Ring	1
18	01.7804.0.000	Top Shaft Bearing	1
19	24.0500.0.000	Needle Bar Drive Shaft	1
20	12.2050.0.003	Bearing	1
21	08.6400.4.004	M4 x 4 Set Screw	2 (2
22	08.6000.6.016	M6 x 16 Screw	2
23	01.7805.0.000	Shaft Bearing	1
24	22.0525.0.050	Needle Bar Crank Asm.	1
25	22.0545.0.000	Washer	1
26	24.0048.0.000	Needle Bar Drive Pulley ●	1
27	22.0175.0.000	Drive Shaft Key	1
28	24.0002.0.000	Clamp Collar	1
29	12.1045.2.001	Retaining Ring	1
30	22.0535.0.100	Needle Bar Crank Link Asm. ▫	1
31	08.6000.6.025	M6 x 25 Screw	1
32	02.0750.2.110	Needle	1
33	24.0001.0.000	Bearing Carrier Upper Shaft	1
34	22.0178.0.000	Spring	1
35	22.0177.0.000	Washer	2
36	24.0100.0.000	M3.5 x 0.35-11 Screw	1
37	08.6000.5.016	M5 x 16 Screw	1
38	12.0010.4.013	Plastic Cable Fitting	1

CLAMPING

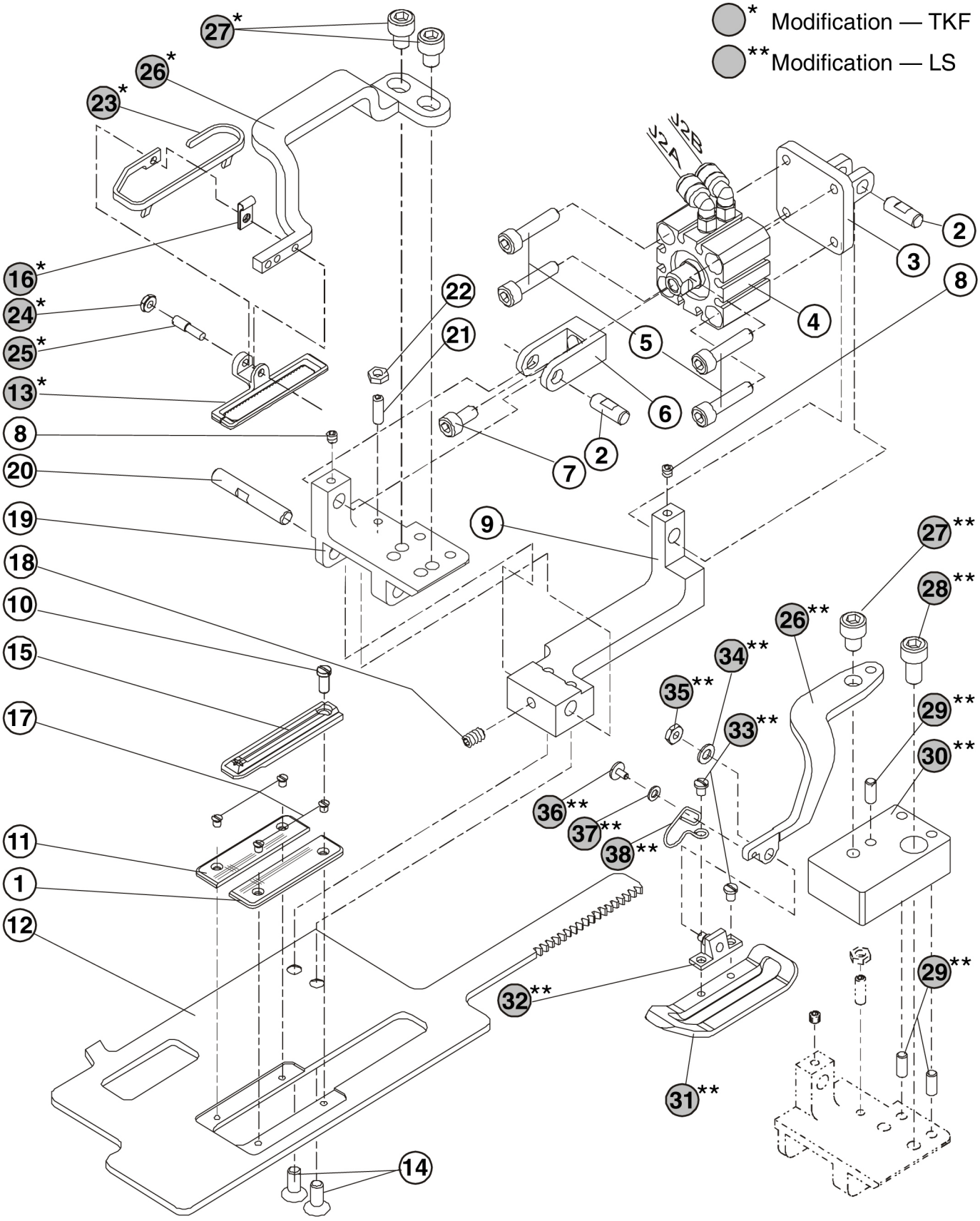

Revised: 12/2024
E-mail: info@amfreece-cars.cz

CLAMPING

DET	PART NUMBER	DESCRIPTION	QTY.
01	24.3205.0.002	R.H. Clamp Mat	1
02	22.0173.0.000	Clamp Toggle Pivot Pin	2
03	24.0036.0.000	Cylinder Mounting Bracket	1
04	See Page 3-51	Cylinder ••••	—
05	08.6000.5.022	Screw M5 x 22	4
06	24.0035.0.000	Cylinder Clevis	1
07	08.6000.5.012	Screw M5 x 12	1
08	08.6400.4.004	Set Screw M4 x 4	2
09	24.3210.0.000	Tail Bracket Clamp	1
10	01.2084.0.000	Fill. Screw 6-52	1
11	24.3205.0.001	L.H. Clamp Mat	1
12	24.0125.0.000	Clamp Plate	1
13*	20.0650.0.640	Clamp Foot *1—1/2””	1*
14	08.6100.5.012	Screw M5 x 12	2
15	22.3034.0.000	Throat Plate	1
16*	01.5174.0.000	Spacer Spring	1*
17	01.2376.0.000	Screw 4-60	4
18	08.6400.5.005	M5 x 5 Set Screw	1
19	24.3209.0.000	Tail Pivot Clamp	1
20	22.0159.0.000	Tail Pivot Clamp Pin	1
21	08.6400.4.012	Set Screw M4 x 12	1
22	08.6700.4.000	Nut M4	1
23*	20.0767.1.022	Needle Guard *1—1/2””	1*
24*	01.3065.0.000	Nut	1*
25*	01.1125.0.000	Shoulder Set Screw	1*
26*	22.3217.0.000	Clamp Arm	1*
26**	22.3256.0.000	Clamp Arm	1**
27*	08.6000.6.008	Screw M6 x 8	2**
27**	08.6000.6.008	Screw M6 x 8	1**
28**	08.6000.6.012	Screw M6x12	1**
29**	07.6045.0.046	Pin	3**
30**	24.3207.0.000	Clamp Arm Spacer 1 1/2”	1**
31**	20.0650.0.606	Clamp Foot 1 1/2”	1**
32**	22.3251.0.000	Bracket Assembly	1**
33**	01.2563.0.000	Screw 6-52x.171L	2**
34**	08.6850.4.000	Washer M4	1**
35**	22.0179.0.000	Nut M3x0.5	1**
36**	01.2136.0.000	Screw 4-60x.167L	1**
37**	01.4474.0.000	Plain Washer	1**
38**	01.5445.0.000	Spring	1*

* Modification TKF
** Modification LS (Label Sewer)

THREAD TRIMMER

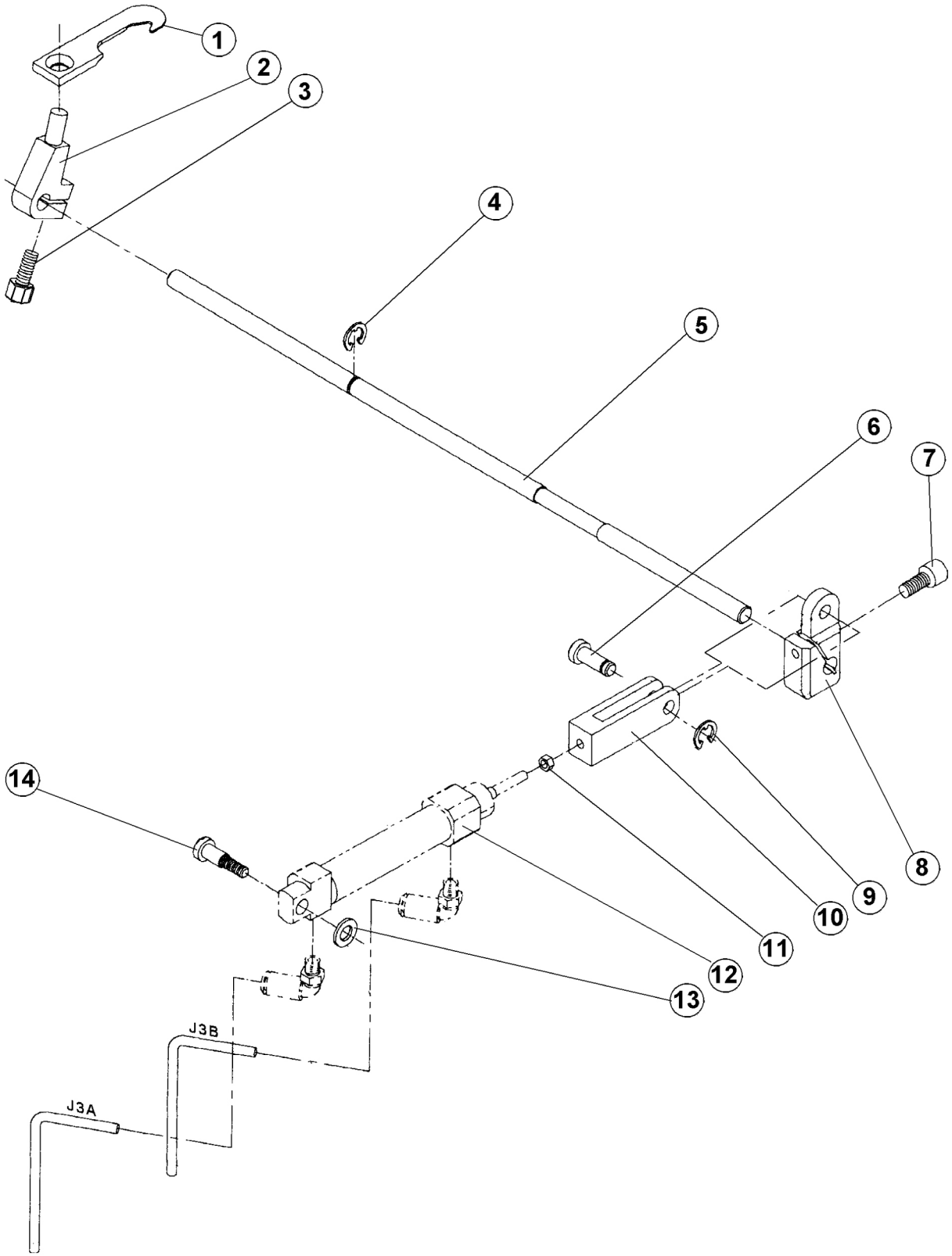

THREAD TRIMMER

DET	PART NUMBER	DESCRIPTION	QTY.
01	20.0093.2.004	Trimmer Hook	1
02	20.0092.0.004	Trimmer Actuator	1
03	01.2386.0.000	3/16-36 x .5 Hex Screw	1
04	12.1045.3.001	E-Clip	1
05	24.0080.0.000	Trimmer Shaft	1
06	24.0003.0.000	Trimmer Pivot	1
07	08.6000.4.012	M4 x 12 Screw	1
08	24.0004.0.000	Trimmer Clamp Lever	1
09	07.6045.0.042	E-Clip	1
10	24.0005.0.000	Clevis	1
11	08.6700.4.000	M4 Nut	1
12	See Page 3-51	Trimmer Cylinder ●	—
13	08.6850.4.000	Washer	1
14	24.0006.0.000	Pivot Screw	1

SHIFTER MECHANISM

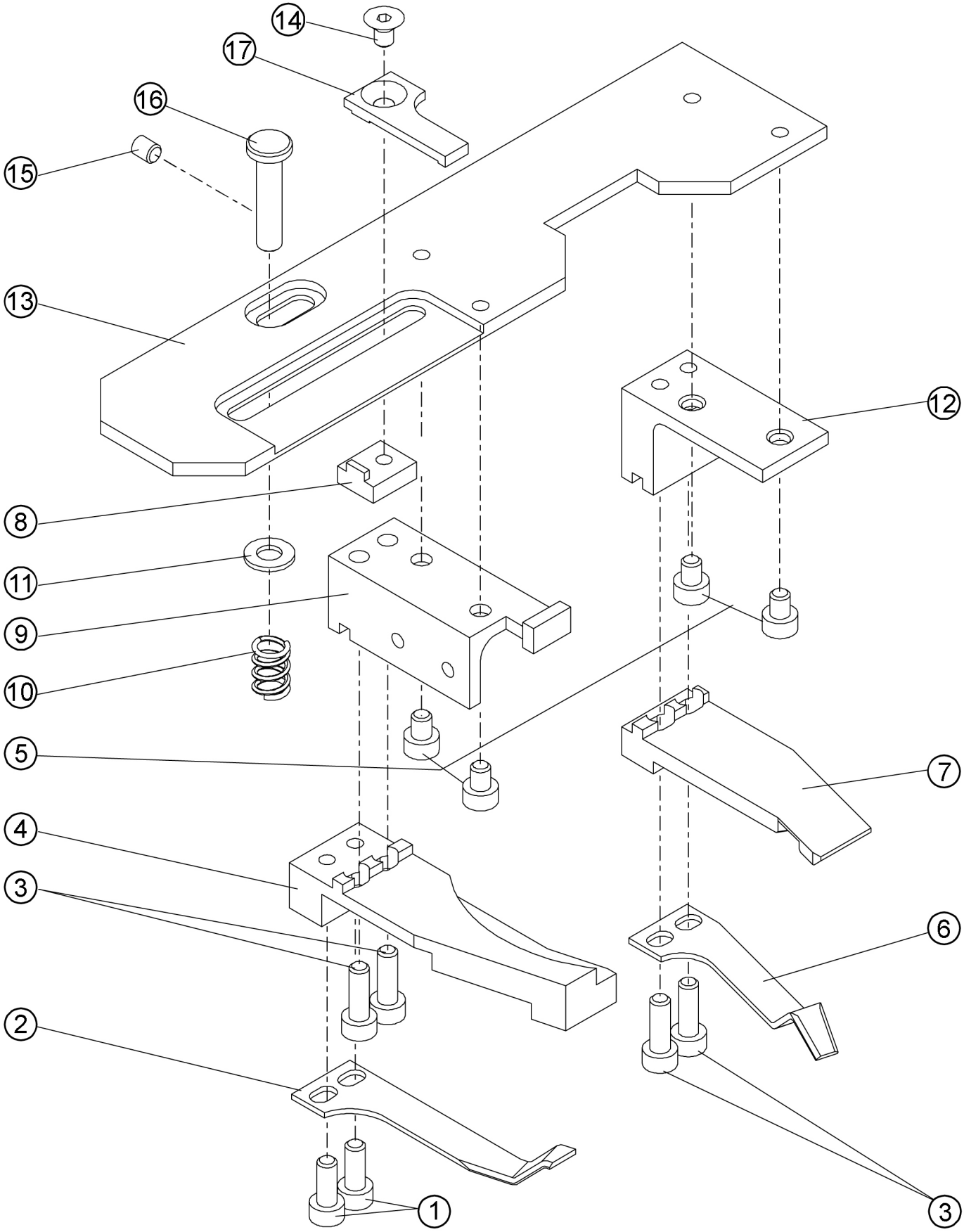

Revised: 12/2024
E-mail: info@amfreece-cars.cz

SHIFTER MECHANISM

DET	PART NUMBER	DESCRIPTION	QTY.
01	08.6000.4.010	M4 x 10 Screw	2
02	22.2653.0.000	Left Shifter Arm Spring	1
03	08.6000.4.016	M4 x 16 Screw	4
04	22.2652.0.000	Left Shifter Arm	1
05	08.6000.4.005	M4 x 5 Screw	4
06	22.2657.0.000	Right Shifter Arm Spring	1
07	22.2656.0.000	Right Shifter Arm	1
08	22.0405.2.000	Adjustable Link Nut	1
09	22.2651.0.000	Left Shifter Block	1
10	07.6440.0.040	Spring	1
11	08.6887.5.000	Washer	1
12	22.2655.0.000	Right Shifter Block	1
13	24.2665.2.000	Main Cam Shifter Plate	1
14	08.6100.4.006	M4 x 6 Screw	1
15	08.6400.4.005	M4 x 5 Set Screw	1
16	22.0400.0.000	Spring Load Pin	1
17	22.2664.0.000	Buttonhole Adjusting Link	1

FEED MECHANISM

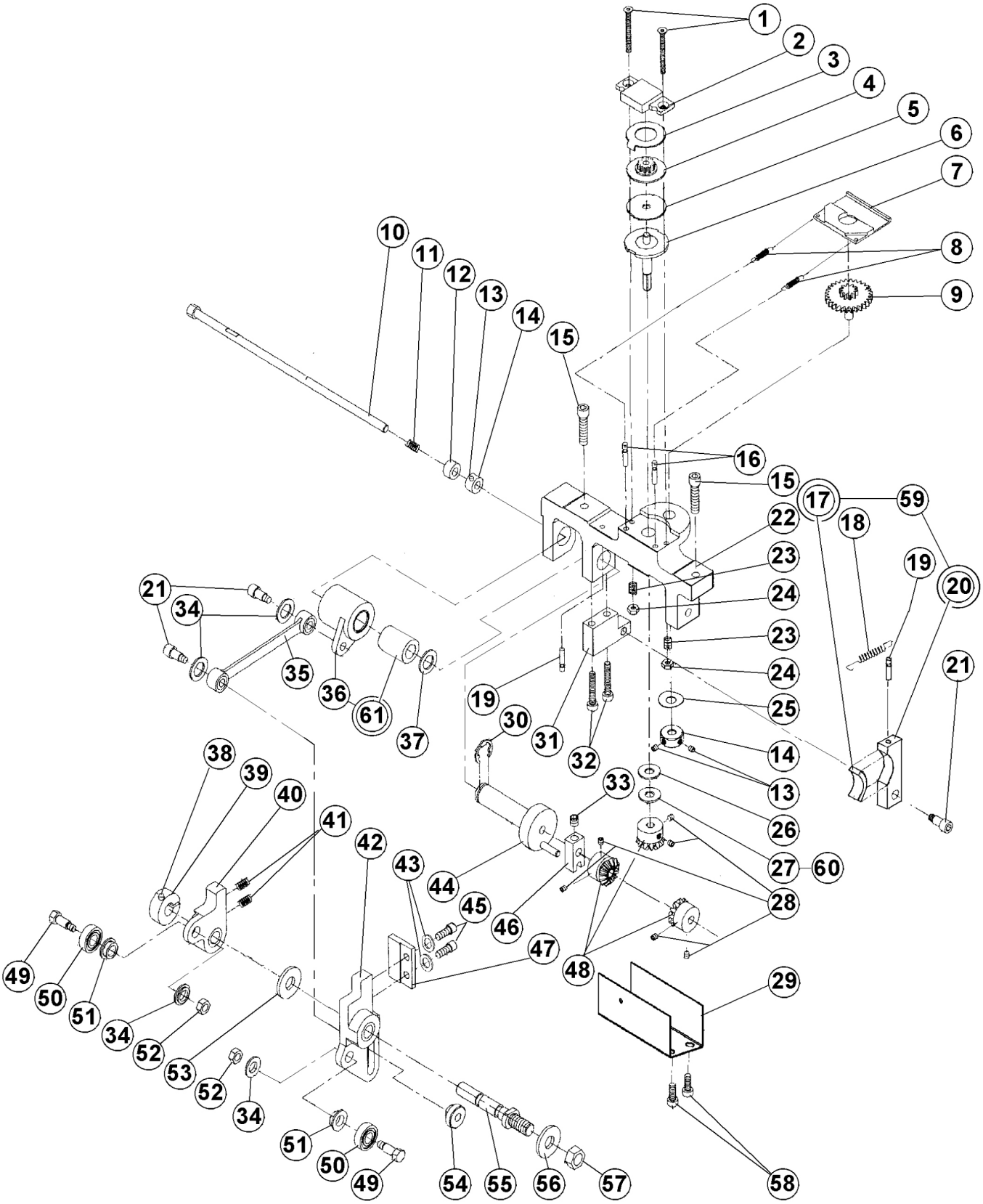

Revised: 12/2024
E-mail: info@amfreece-cars.cz

FEED MECHANISM

DET	PART NUMBER	DESCRIPTION		QTY.
01	08.6100.3.030	M3 x 30 Screw		2
02	22.0114.0.000	Feed Brake Pressure Plate		1
03	22.0121.0.000	Slip Clutch Drive Washer		1
04	22.0354.0.000	Slip Clutch Feed Gear		1
05	24.0126.0.000	Friction Washer	●●●	1
06	22.0312.0.000	Slip Clutch Feed Shaft		1
07	22.0061.0.000	Clamp Plate Gear Rack Retainer		1
08	07.6440.0.033	Spring		2
09	24.0351.0.000	Feed Gear Assembly		1
10	22.0325.0.000	Feed Reversing Shaft		1
11	07.6440.0.041	Spring		1
12	22.0228.0.000	Collar		1
13	17.0011.1.149	M5 x 0,5 - 5 Set Screw		4
14	24.0049.0.000	Set Collar		2
15	08.6000.5.020	M5 x 20 Screw		2
16	07.6045.0.037	3 x 16 Grooved Pin		2
17	22.0313.0.000	Feed Brake Pad	●●●	1)
18	07.6440.0.050	Spring		1
19	07.6045.0.009	3 x 12mm Pin		2
20	22.0309.0.000	Feed Brake		1)
21	22.0184.0.000	M5 x 8 Screw		3
22	22.0315.0.000	Feed Shaft Bracket	●●	1
23	07.6440.0.028	Spring		2
24	08.6733.3.000	M3 Lock Nut		2
25	17.0019.2.057	Lockwasher		1
26	22.0208.0.000	Flat Washer		1
27	22.0186.0.000	Washer Dia. 5.2/17-0.2		1
28	08.6400.4.005	M4 x 5 Set Screw		6
29	24.2035.0.000	Gear Cover		1
30	07.6045.0.034	E-Ring		1
31	22.0049.0.000	Feed Brake Mounting Block	●	1
32	08.6000.4.025	M4 x 25 Screw		2
33	08.6400.5.005	M5 x 5 Set Screw		1
34	22.0100.0.000	Shoulder Washer		4
35	22.0305.0.000	Feed Connecting Link	●●●	1
36	22.0320.0.000	Feed Shaft Bearing Housing		1
37	17.0019.0.517	Washer		1
38	08.6000.3.010	M3 x 10 Screw		1
39	22.0183.0.000	Collar Dia. 8		1
40	22.0026.0.000	L.H. Feed Cam Follower	●●●	1
41	07.6440.0.018	Spring		2
42	24.0127.0.000	R.H. Feed Cam Follower	●●●	1
43	08.6800.4.000	M4 Lockwasher		2
44	22.0336.0.000	Feed Shaft		1
45	08.6000.4.014	M4 x 14 Screw		2
46	22.0370.0.000	Feed Crank		1

FEED MECHANISM

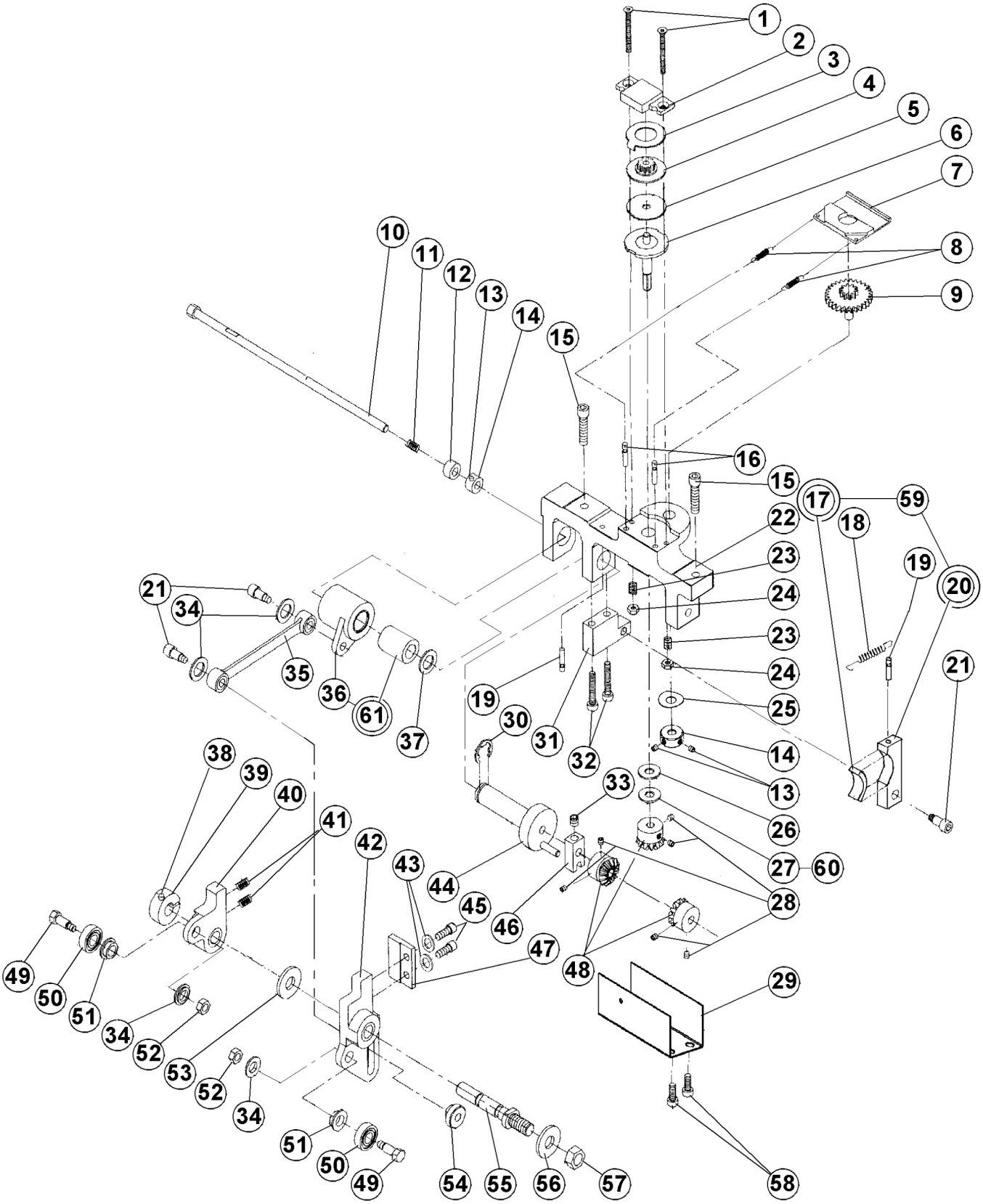

Revised: 12/2024
E-mail: info@amfreece-cars.cz

FEED MECHANISM

DET	PART NUMBER	DESCRIPTION	QTY.
47	22.0021.0.000	Spring Retain Block	1
48	22.0353.0.000	Steel Bevel Gear •	3
49	22.0032.0.000	Bearing Shoulder Screw	2
50	07.6321.0.025	Bearing	2
51	22.0031.0.000	Bearing Spacer	2
52	08.6710.5.000	M5 Nut	2
53	22.0232.0.000	Washer	1
54	22.0110.0.000	M5 Shoulder Nut	1
55	22.0022.0.000	Pivot Shaft	1
56	08.6850.8.000	M8 Flat Washer	1
57	08.6700.8.000	M8 Nut	1
58	08.6000.4.005	M4 x 5 Screw	2
59	22.0309.0.050	Feed Brake Assembly	1
60	24.0140.0.000	Washer Dia. 5.2/17-0.1	1
61	07.6321.0.030	Bearing	(1)

LOOPER MECHANISM

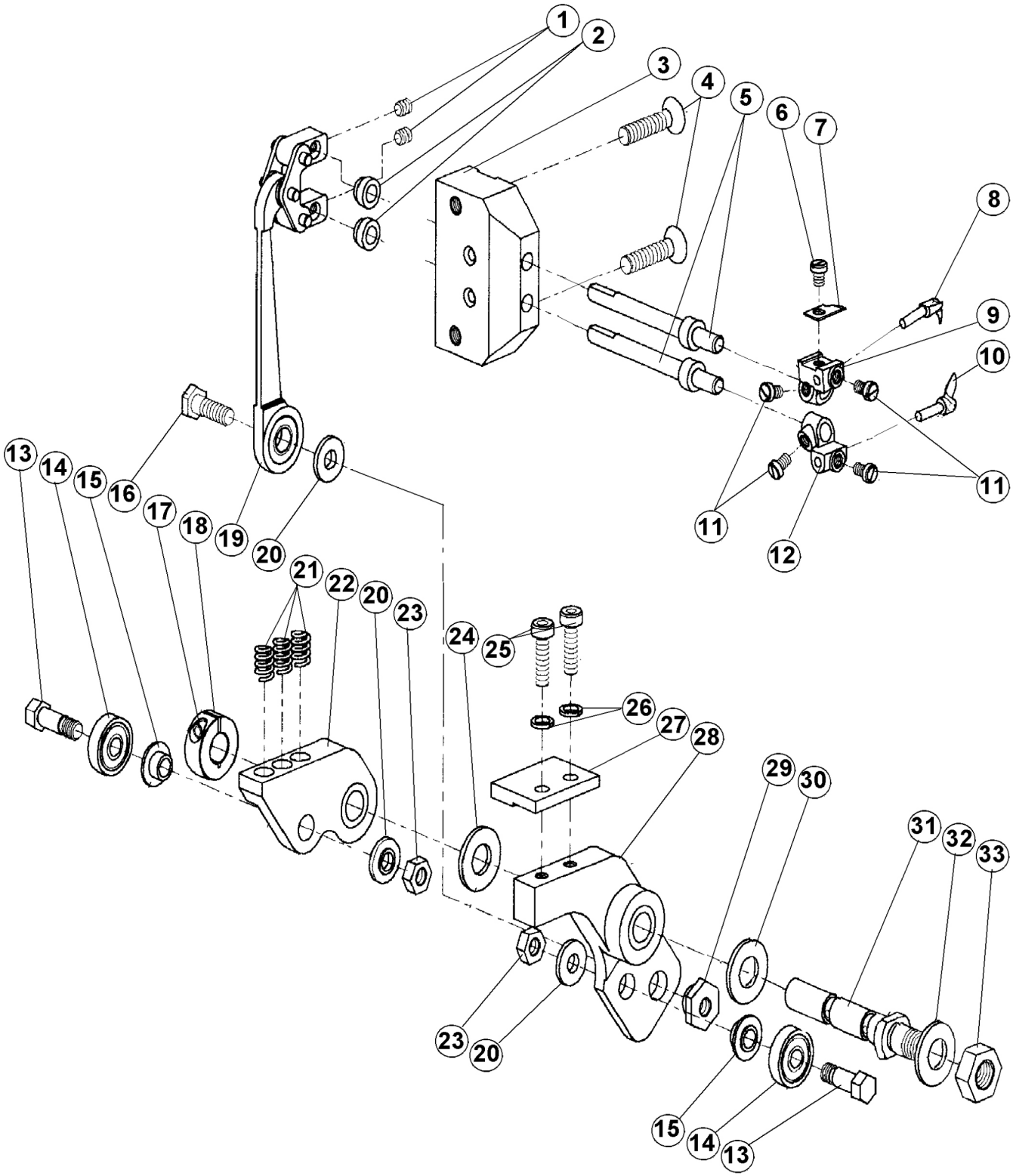

LOOPER MECHANISM

DET	PART NUMBER	DESCRIPTION	QTY.
01	08.6400.4.004	M4 x 4 Set Screw	2
02	22.2442.0.000	Looper Spacer	2
03	22.2410.0.000	Looper Shaft Block	1
04	08.6100.5.020	M5 x 20 Screw	2
05	22.2440.0.000	Looper Shaft	2
06	01.1382.0.000	Screw	1
07	20.0094.0.000	Trimmer Knife	1
08	20.0111.0.000	First Looper	1
09	23.2106.0.000	First Looper Holder	1
10	20.0112.0.000	Second Looper	1
11	01.1397.0.000	Screw	4
12	23.2107.0.000	Second Looper Holder	1
13	24.0066.0.000	Bearing Screw	2
14	12.2010.1.002	Cam Follower Bearing	2
15	22.0031.0.000	Bearing Spacer	2
16	22.0064.0.000	Bite Shoulder Screw	1
17	08.6000.3.010	M3 x 10 Screw	1
18	22.0183.0.000	Collar	1
19	22.2425.0.050	Looper Link Assembly	1
20	22.0100.0.000	Shoulder Washer	3
21	07.6440.0.036	Spring	3
22	22.0024.0.000	Looper Cam Follower Plate ●●●	1
23	08.6710.5.000	M5 Hex Nut	2
24	22.0232.0.000	Flat Washer	1
25	08.6000.4.014	M4 x 14 Screw	2
26	08.6800.4.000	M4 Lockwasher	2
27	22.0021.0.000	Spring Retainer Block	1
28	22.0023.0.000	R.H. Looper Cam Follower Plate ●●●	1
29	22.0105.0.000	Looper Eccentric Nut	1
30	22.0233.0.000	Flat Washer	1
31	22.0022.0.000	Pivot Shaft	1
32	08.6850.8.000	M8 Flat Washer	1
33	08.6700.8.000	M8 Hex Nut	1

BASE

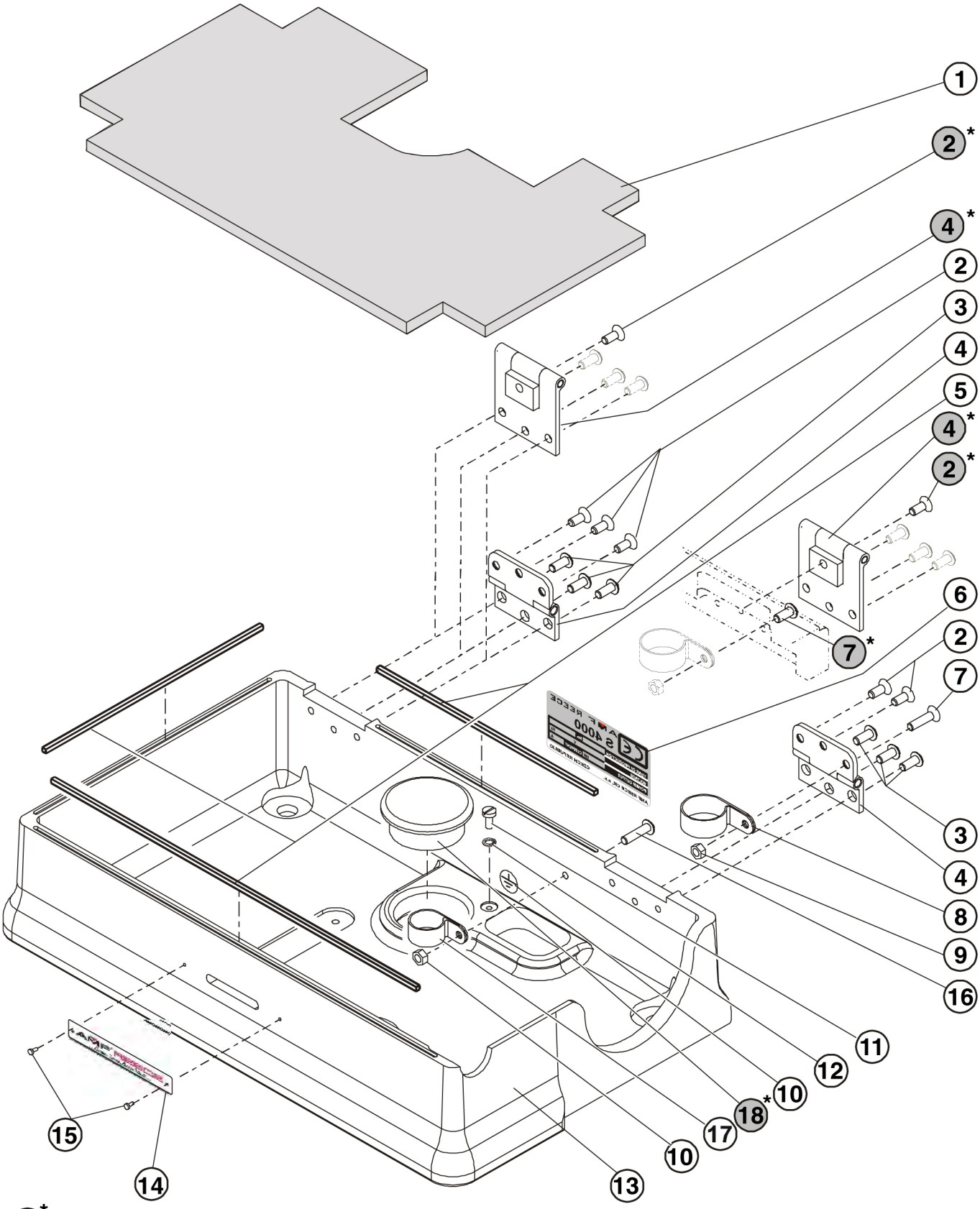

*— S4000 TKF Embedded Machine

Revised: 12/2024
E-mail: info@amfreece-cars.cz

BASE

DET	PART NUMBER	DESCRIPTION		QTY.
01	24.0111.0.000	Base Sound Deadener	●●●	1
02	08.6100.5.012	M5 x 12 Screw		5
02*	08.6100.5.012	M5 x 12 Screw		2*
03	08.6200.5.012	M5 x 12 Screw		6
04	22.1010.0.000	Base Hinge		2
04*	24.0155.0.000	Base Hinge		2*
05	24.0038.0.000	Base Gasket	●●●	1
06	12.8000.0.016	CE”” Label		1
07	08.6100.5.020	M5 x 20 Screw		1
07*	08.6200.5.014	M5 x 14 Screw		1*
08	12.0008.4.197	Cord Clamp	●●●	1
09	08.6700.5.000	M5 Nut		1
10	12.0008.4.052	Label (Ground)		1
11	08.6012.4.010	M4 x 10 Screw		1
12	08.6832.4.000	M4 Serrated Lockwasher		1
13	24.6005.1.002	Base		1
14	—	Label		1
15	—	Drive Screw		2
16	08.6200.5.020	Screw		1
17	12.0008.4.100	Cord Clamp		1
18*	12.0008.4.632	Plug		1*

* S-4000 TKF Embedded Machine

BITE MECHANISM

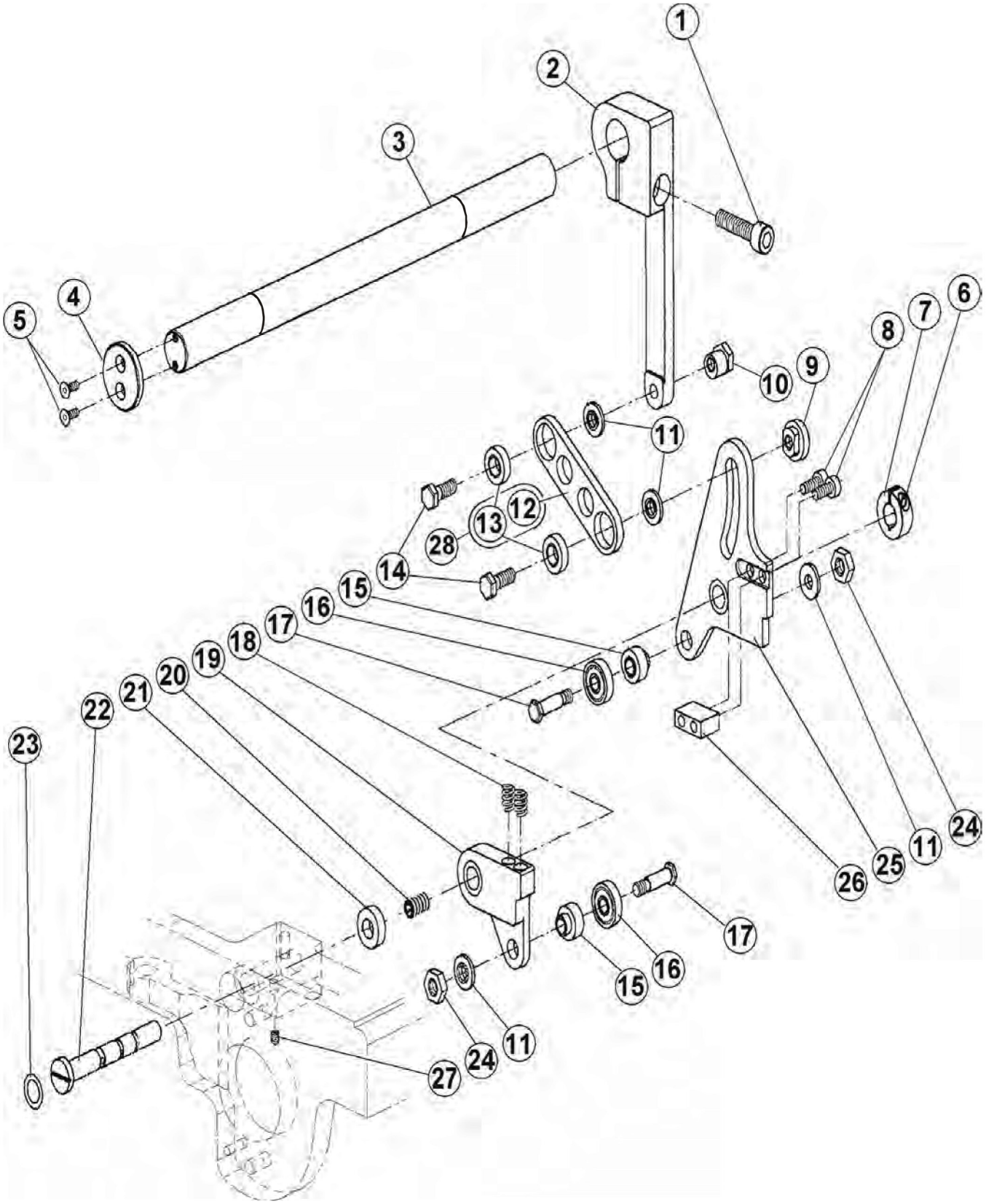

Revised: 12/2024
E-mail: info@amfreece-cars.cz

BITE MECHANISM

DET	PART NUMBER	DESCRIPTION	QTY.
01	08.6000.6.025	M6 x 25 Screw	1
02	22.0008.0.000	Bite Lever ●	1
03	24.0055.0.000	Bite Shaft	1
04	22.0063.0.000	Bite Shaft Retainer	1
05	08.6100.3.008	M3 x 8 FH Screw	2
06	08.6000.3.010	M3 x 10 Screw	1
07	22.0183.0.000	Collar*Dia. 8	1
08	08.6000.4.014	M4 x 14 Screw	2
09	22.0110.0.000	M5 Shoulder Nut	1
10	22.0214.0.000	M5 Eccentric Nut	1
11	22.0100.0.000	Shoulder Washer	4
12	22.0009.0.000	Bite Adjusting Link ●	(1)
13	07.6321.0.029	Bearing	(2)
14	22.0064.0.000	Bite Shoulder Screw	2
15	22.0029.0.000	Bite Follower Bearing Spacer	2
16	07.6321.0.025	Bearing	2
17	22.0028.0.000	Bite Follower Bearing Screw	2
18	07.6440.0.028	Spring	2
19	22.0027.0.000	Right Cam Follower ●●●	1
20	08.6400.4.005	M4 x 5 Set Screw	1
21	22.0069.0.000	Bite Follower Spacer	1
22	22.0020.0.000	Bite Pivot Shaft	1
23	12.0008.6.800	Rubber Ring ●●●	1
24	08.6700.5.000	M5 Hex Nut	2
25	24.0033.0.000	Left Cam Follower ●●●	1
26	22.0030.0.000	Bite Follower Spring Retainer	1
27	08.6400.4.004	M4x4 Screw	1
28	22.0009.0.050	Bite Adjusting Link Assembly	1

THREAD DRAW - OFF MECHANISM

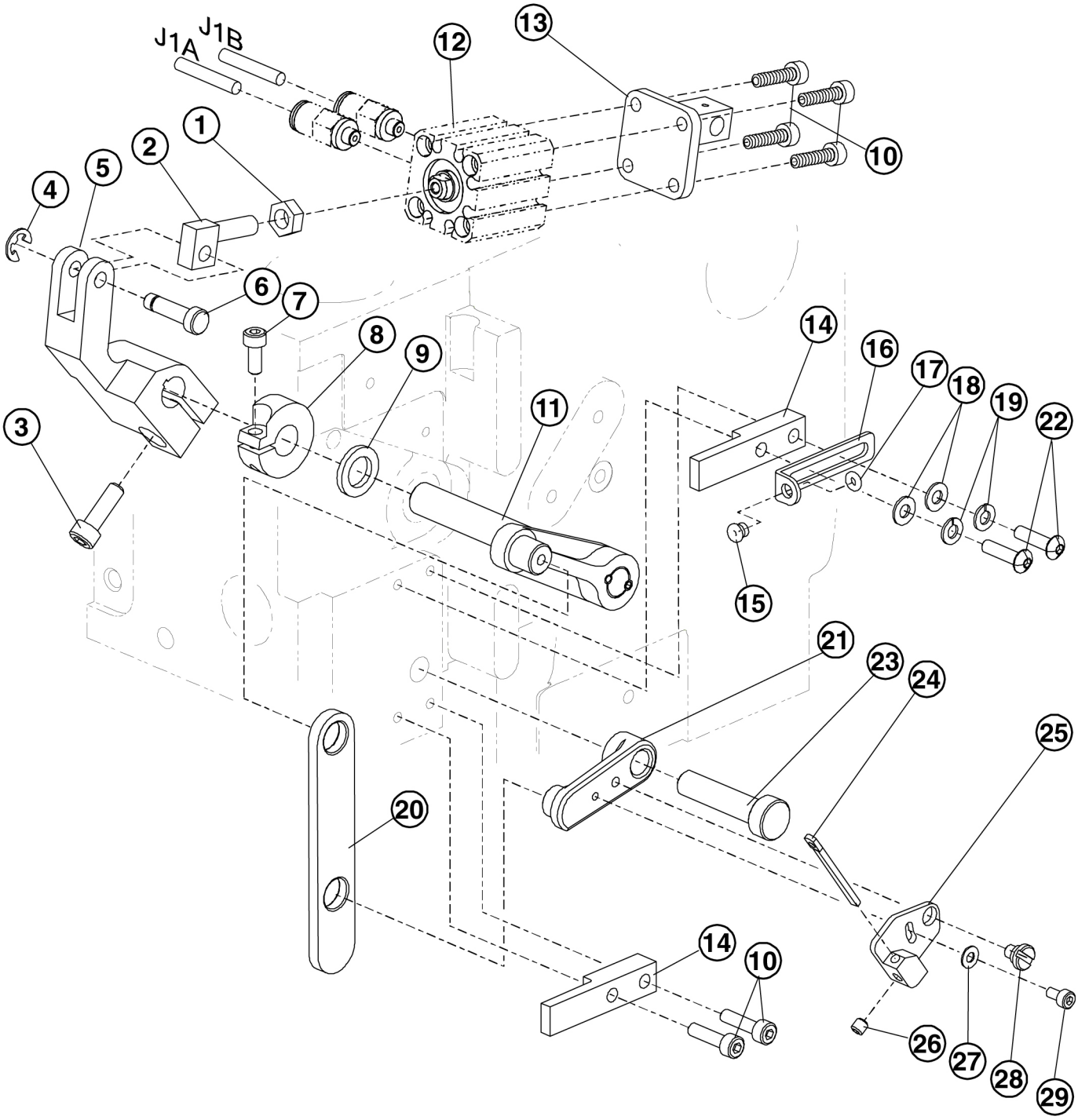

Revised: 12/2024
E-mail: info@amfreece-cars.cz

THREAD DRAW - OFF MECHANISM

DET	PART NUMBER	DESCRIPTION		QTY.
01	08.6710.6.000	M6 Nut	●●●	1
02	24.0037.0.000	Cylinder Clevis	●●●	1
03	08.6000.5.016	M5 x 16 Screw		1
04	07.6045.0.042	E-Clip		1
05	24.0011.0.000	Knife Drive Lever		1
06	24.0014.0.000	Pivot		1
07	08.6000.4.010	M4 x 10 Screw		1
08	24.0010.0.000	Clamp Collar		1
09	24.0009.0.000	Washer		1
10	08.6000.4.016	M4 x 16 Screw		6
11	22.1415.0.050	Knife Lever Assembly		1
12	See Page 3-51	Thread Draw-Off Cylinder		—
13	24.0039.1.000	Thread Draw-Off Bracket		1
14	22.1436.0.000	Drive Plate Retainer	●●●●	2
15	01.7447.1.000	Porcelain Guide		1
16	22.0046.0.000	Thread Guide Bracket		1
17	01.6551.0.000	Retaining Ring		1
18	08.6850.4.000	M4 Flat Washer		2
19	08.6800.4.000	M4 Lockwasher		2
20	24.1430.1.000	Drive Plate		1
21	24.0062.0.000	Knife Guide Link		1
22	08.6200.4.016	M4 x 16 Screw		2
23	22.0161.0.000	Pivot Eccentric		1
24	22.0091.0.000	Thread Take-Up		1
25	24.0063.0.000	Thread Draw-Off		1
26	08.6400.4.004	M4 x 4 Set Screw		1
27	08.6850.3.000	M3 Washer		1
28	24.0061.0.000	Shoulder Screw		1
29	08.6000.3.006	M3 x 6 Screw		1

MAIN CAM

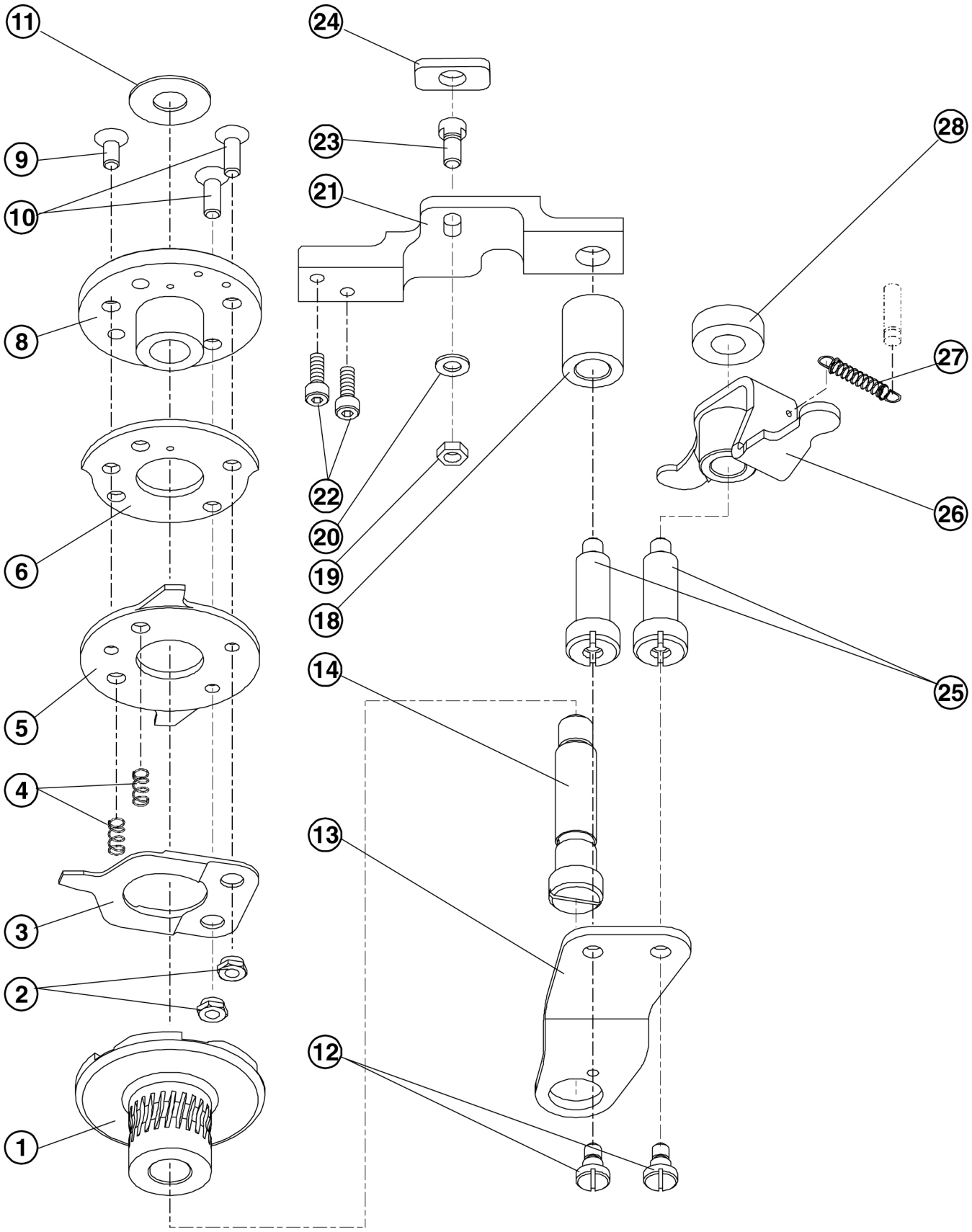

Revised: 12/2024
E-mail: info@amfreece-cars.cz

MAIN CAM

DET	PART NUMBER	DESCRIPTION	QTY.
01	22.2607.0.000	Drive Disk/Worm Gear Hub	1
02	22.2627.0.000	Shoulder Nut	2
03	24.2626.3.000	Drive Disk Switch Spring	1
04	07.6440.0.037	Spring	2
05	24.3200.0.000	Stop Disk	1
06	24.3201.0.000	Feed Reversing Cam	1
07	24.3203.0.000	Barring Cam	1
08	08.6100.5.010	M5 x 10 Screw	1
09	22.0137.0.000	M5 x 14 Screw	2
10	07.6321.0.001	Thrust Washer	1
11	22.0182.0.000	M5 x 4 Screw	2
12	22.0097.0.000	Main Cam Brace	1
13	22.2610.0.000	Main Cam Shoulder Screw	1
14	22.3206.0.000	Clamp Plate Lever Spacer	1
15	08.6700.5.000	M5 Nut	1
16	08.6850.5.000	M5 Washer	1
17	22.3216.0.000	Clamp Plate	1
18	08.6000.4.012	Screw M4x12	2
19	22.2633.0.000	Slidestone Retaining Screw	1
20	22.2631.0.000	Clamp Plate Slidestone	1
21	22.0106.0.000	Hub Shoulder Screw	2
22	24.2640.2.000	Feed Reversing Lever	1
23	07.6440.0.045	Extension Spring	1
24	22.3003.0.000	Spacer	1

HEAD ASSEMBLY

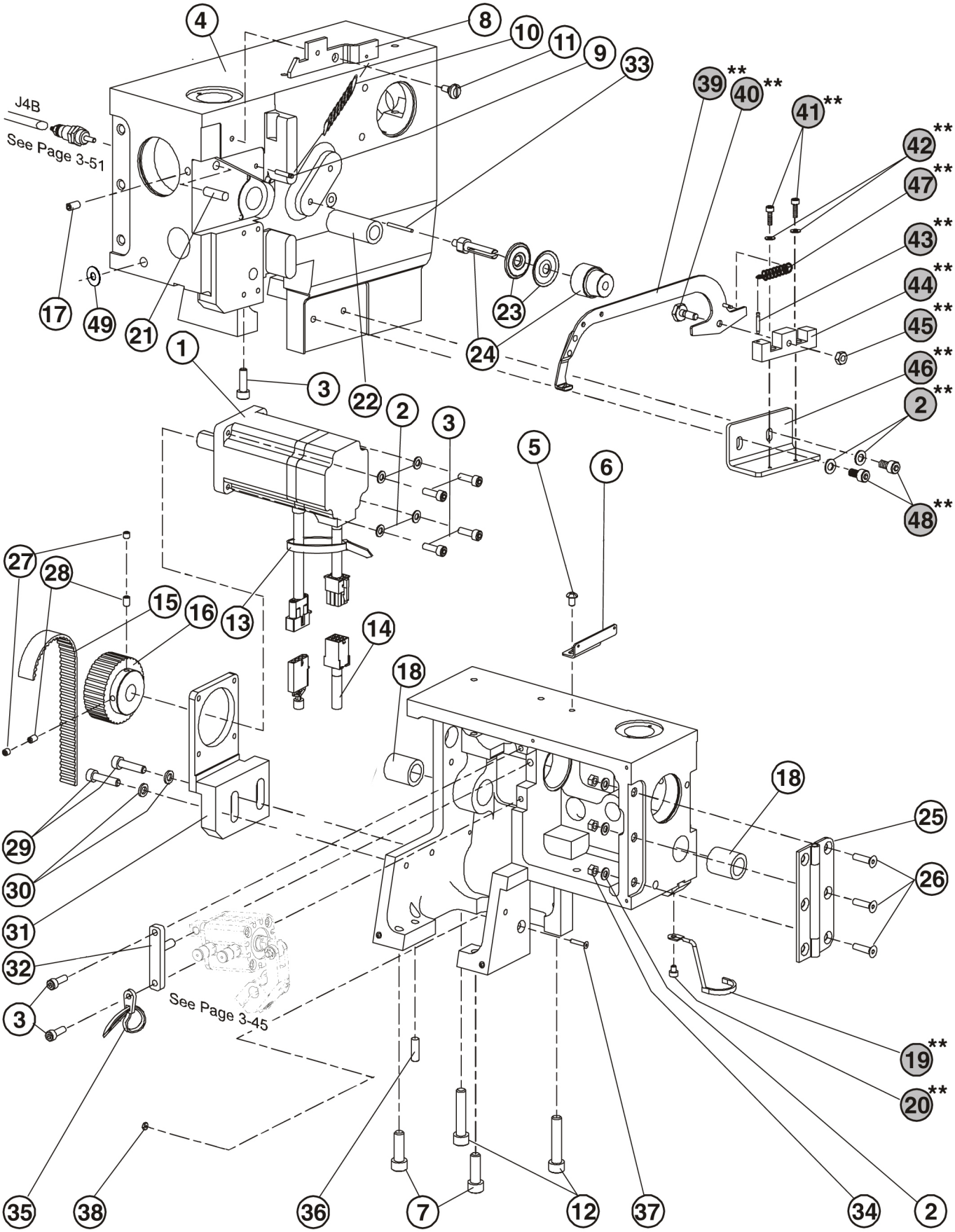

Revised: 12/2024
E-mail: info@amfreece-cars.cz

HEAD ASSEMBLY

DET	PART NUMBER	DESCRIPTION		QTY.
01	See Page 3-4	Servomotor	• •• •••	1
02	08.6850.5.000	M5 Washer		7
02**	08.6850.5.000	M5 Washer		2
03	08.6000.5.016	M5 x 16 Screw		8
04	24.6000.5.000	Head		1
05	08.6200.5.008	M5 x 8 Screw		1
06	22.0054.0.000	Upper Thread Guide		1
07	08.6000.8.025	M8 x 25 Screw		2
08	22.0058.0.000	Sewing Head Latch		1
09	07.6045.0.037	3 x 16 Grooved Pin		1
10	07.6440.0.051	Latch Tension Spring		1
11	22.0062.0.000	M4 x 3 Screw		1
12	08.6000.8.040	M8x40 Screw		2
13	12.0008.3.023	Ty-wrap	•	1
14	See Page 3-4	Encoder Cable	•• •••	1
15	12.5050.2.009	Belt	•••	1
16	24.0108.0.000	Motor Pulley	•	1
17	08.6400.5.010	M5 x 10 Screw		1
18	01.7806.0.000	Oilite Bushing	••	2
19**	24.0044.0.000	Needle Guard		1
20**	08.6000.4.005	M4 x 5 Screw		1
21	07.6045.0.053	6 x 20 Pin		1
22	22.1422.0.000	Knife Shaft Bushing		1
23	17.0082.8.082	Release Washer		1
24	24.0119.0.050	Large Tension Assembly	•••	1
25	22.6002.0.000	Head Hinge Assembly		1
26	08.6100.5.020	M5 x 20 Screw		3
27	08.6400.5.005	M5 x 5 Set Screw		2
28	08.6400.5.008	M5x8 Set Screw		2
29	08.6000.6.025	M6 x 25 Screw		2
30	08.6850.6.000	M6 Washer		2
31	24.0106.1.000	Motor Bracket		1
32	24.0016.0.000	Cylinder Pivot Stud Assembly		1
33	12.1010.2.003	Pin 2 x 24		1
34	08.6700.5.000	Nut M5	•••	3
35	12.0008.4.598	Plastic Cable Fitting		1
36	12.1011.0.001	Pin 6 x 20		1
37	08.6100.3.016	Screw M3 x 16		1
38	08.6700.3.000	Nut M3		1

** Modification LS

HEAD ASSEMBLY

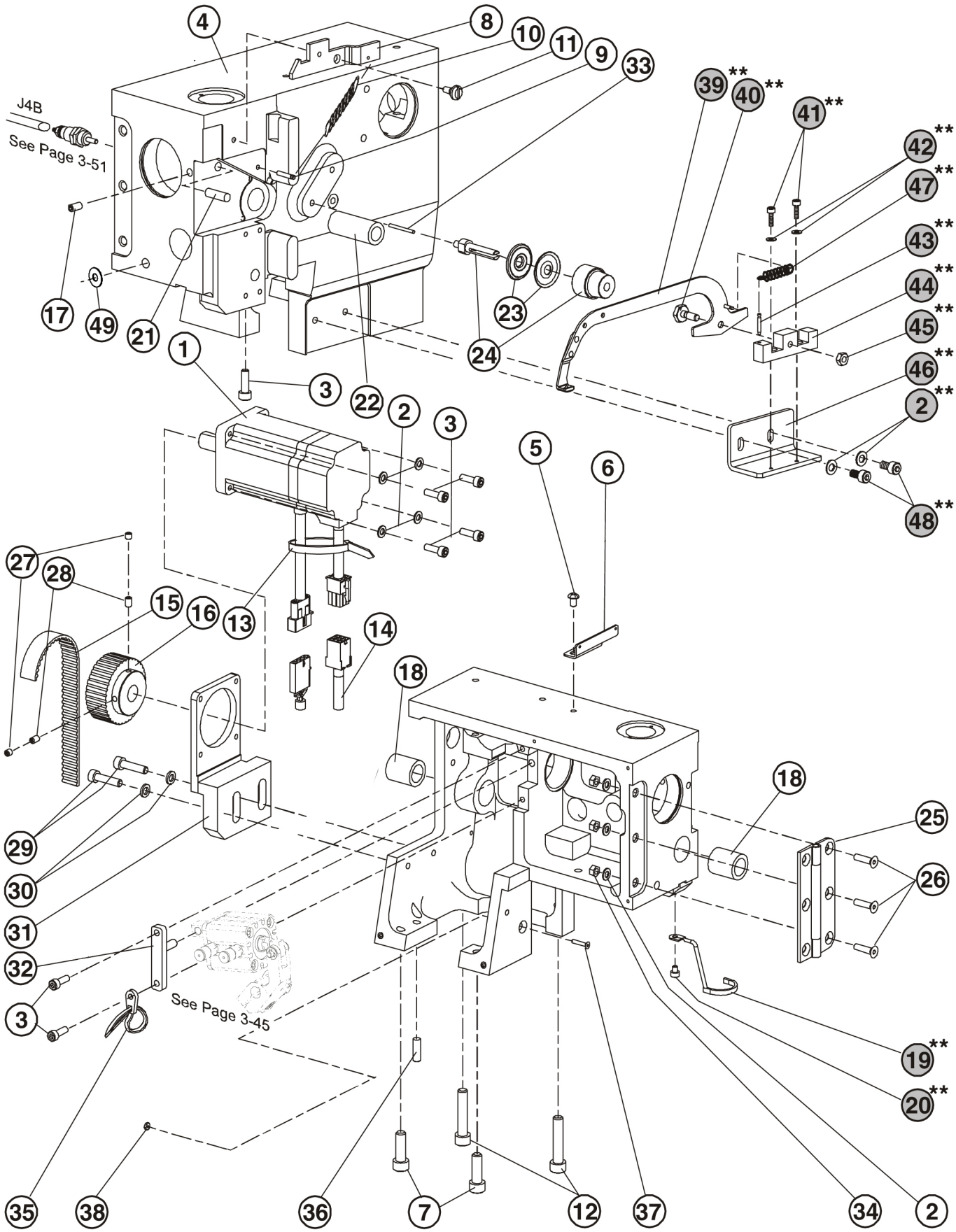

Revised: 12/2024
E-mail: info@amfreece-cars.cz

HEAD ASSEMBLY

DET	PART NUMBER	DESCRIPTION	QTY.
39**	22.3255.0.000	Hold Down	1
40**	01.2527.0.000	3/16-36 Hex Bolt	1
41**	08.6000.3.010	Screw M3x10	2
42**	08.6852.3.000	Washer M3	2
43**	01.6038.0.000	Anchor Pin	1
44**	20.0681.0.000	Bracket	1
45**	01.3005.0.000	Nut 3/16-36	1
46**	22.3252.0.000	Mounting Plate	1
47**	07.6440.0.046	Extension Spring	1
48**	08.6000.5.010	M5x10Screw	2
49	24.0546.0.000	Washer	1

** Modification LS

BEDPLATE

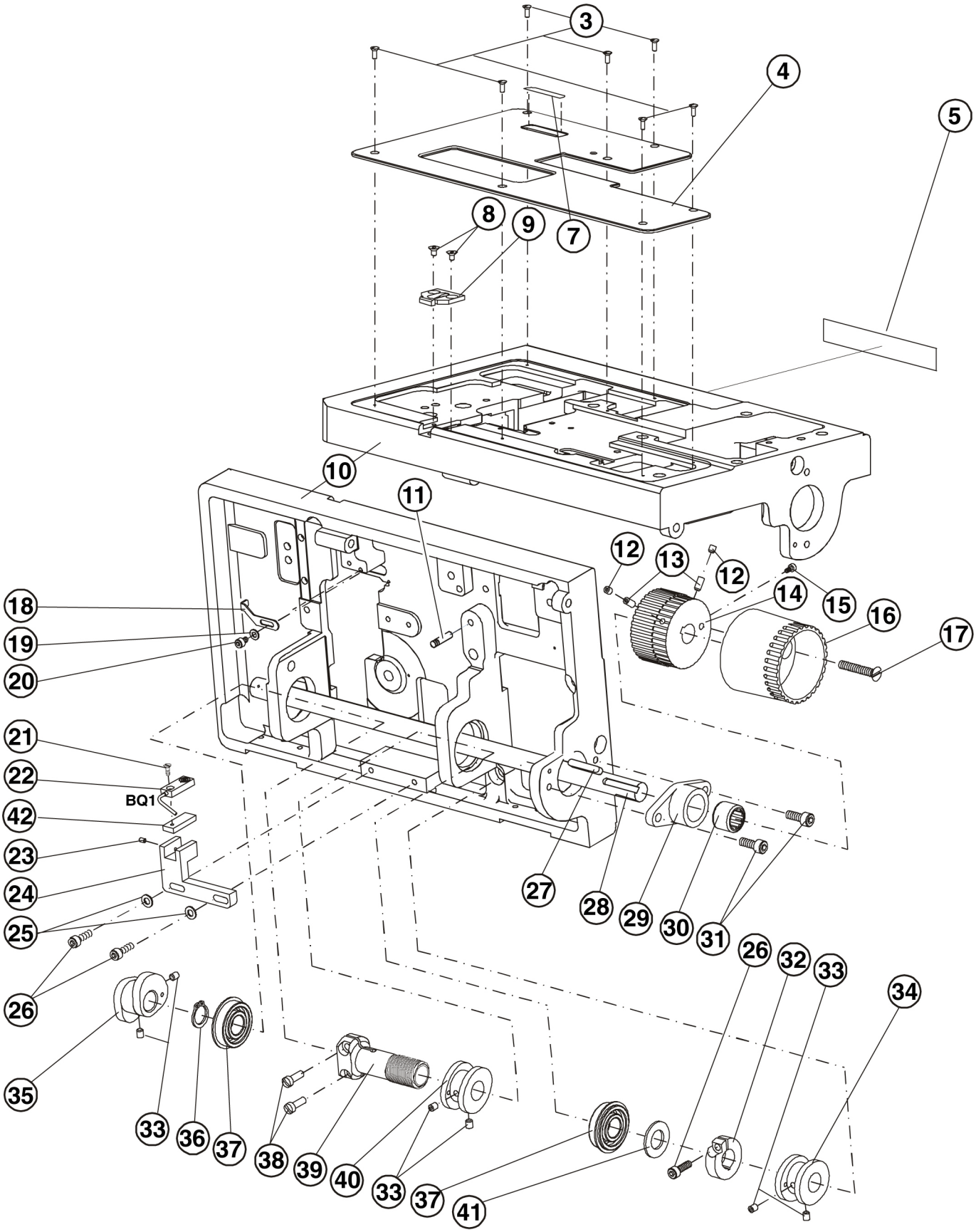

Revised: 12/2024
E-mail: info@amfreece-cars.cz

BEDPLATE

DET	PART NUMBER	DESCRIPTION	QTY.
03	08.6120.3.008	M3x8 Screw	7
04	22.6101.2.000	Cover Plate s=2mm (standard)	1
04		Cover Plate s=1mm (Extra Parts)	1
05	—	AMF Reece Label - small	1
07	22.0096.0.000	Buttonhole Size Sticker	1
08	08.6100.4.006	M4x6 Screw	2
09	22.0408.0.000	Trimmer Cover Plate	1
10	24.6100.0.000	Bedplate	1
11	07.6045.0.054	5 x 20 mm Pin	1
12	08.6400.5.005	M5 x 5 Set Screw	2
13	08.6400.5.010	M5 x 10 Set Screw	2
14	24.0018.0.000	Main Shaft Drive Pulley ●	1
15	08.6000.3.006	M3 x 6 Screw	1
16	24.0051.0.066	Hand Wheel ●	1
17	08.6100.6.035	M6 x 35 Screw	1
18	22.3219.0.000	Needle Guard	1
19	08.6850.4.000	M4 Washer	1
20	08.6000.4.006	M4 x 6 Screw	1
21	08.6100.3.008	M3 x 8 Screw	1
22	See Page 3-39	End of Cycle Sensor with Cable (BQ1) ●●●	—
23	08.6400.3.004	M3 x 4 Set Screw	1
24	24.0020.0.000	End of Cycle Sensor Bracket	1
25	08.6850.5.000	M5 Washer	2
26	08.6000.5.016	M5 x 16 Screw	3
27	12.4030.0.002	Key 5x5x30	1
28	24.1000.0.000	Main Shaft	1
29	24.0019.0.000	Bearing Carrier Lower Shaft	1
30	12.2050.0.005	Bearing	1
31	08.6000.6.016	M6 x 16 Screw	2
32	24.0002.0.000	Clamp Collar	1
33	17.0011.1.149	M5 x 0.5-5 Set Screw	6
34	22.0006.0.000	Bite Cam	1
35	24.2400.0.000	Looper Cam	1
36	12.1045.2.001	Retaining Ring	1
37	01.7805.0.000	Shaft Bearing	2
38	22.0153.0.000	Screw	2
39	22.8400.0.000	Shaft Worm Gear	1
40	22.0300.0.000	Feed Cam	1
41	22.0545.0.000	Washer	1
42	24.0027.0.000	Sensor Mounting Plate	1

COVERS

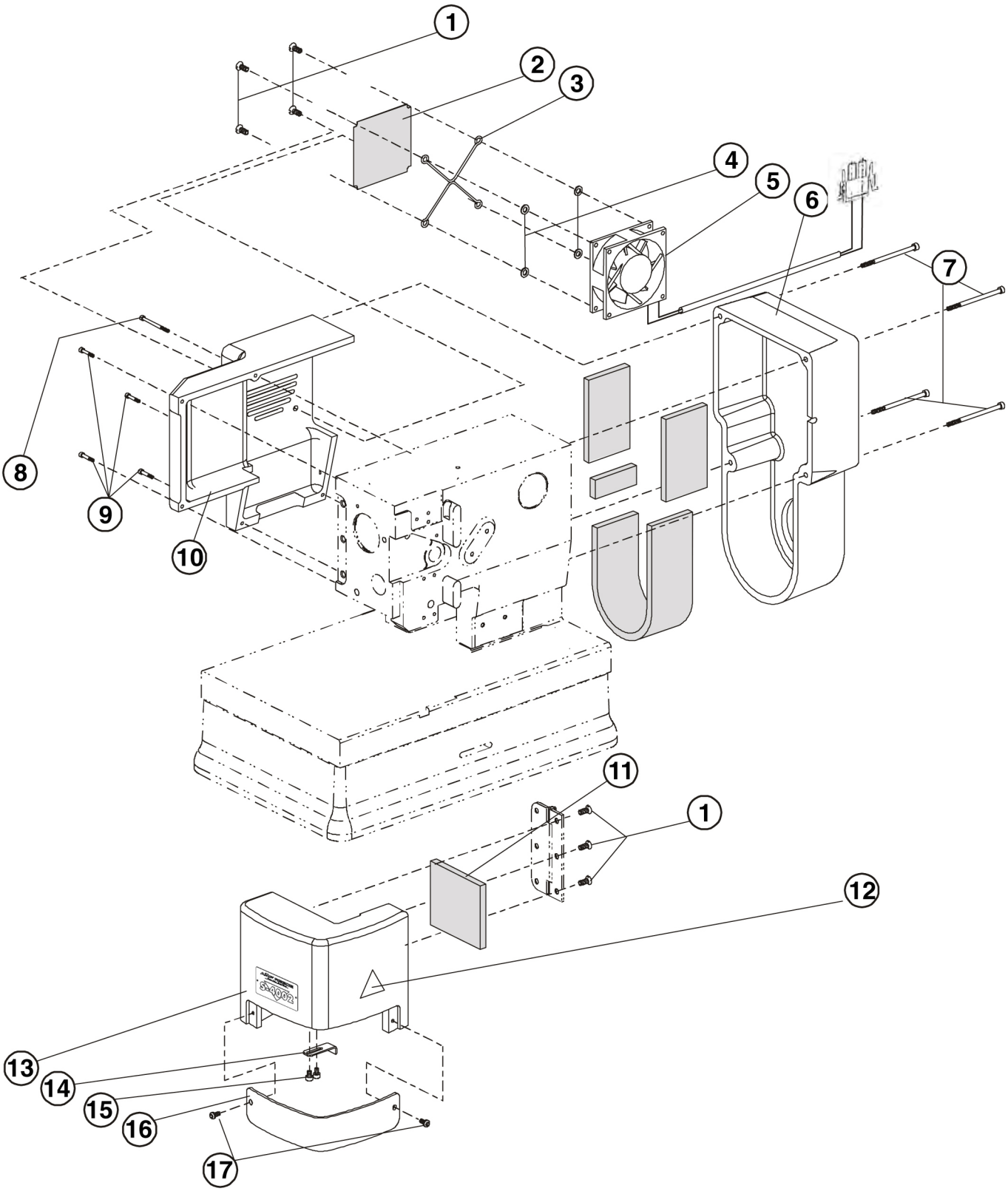

COVERS

DET	PART NUMBER	DESCRIPTION	QTY.
01	08.6100.5.016	Screw M5 x 16	7
02	24.0068.0.000	Net	1
03	24.0067.0.000	Fan Rack	1
04	08.6850.5.000	Washer M5	4
05	See Page 3-39	Fan Assembly	—
06	24.6004.7.000	Pulley Cover	1
07	08.6000.4.070	Screw M4 x 70	4
08	08.6000.3.040	Screw M3 x 40	1
09	08.6000.3.016	Screw M3 x 16	4
10	24.6001.7.000	Head Rear Cover	1
11	24.0112.0.000	Cover Sound Deadener	1
12	—	Label	1
13	24.6003.1.000	Needle Bar Cover	1
14	22.0057.0.000	Cover Latch	1
15	08.6000.4.006	Screw M4 x 6	2
16	24.0154.0.000	Eye Shield	1
17	08.6200.4.008	Screw M4 x 8	2

LUBRICATION

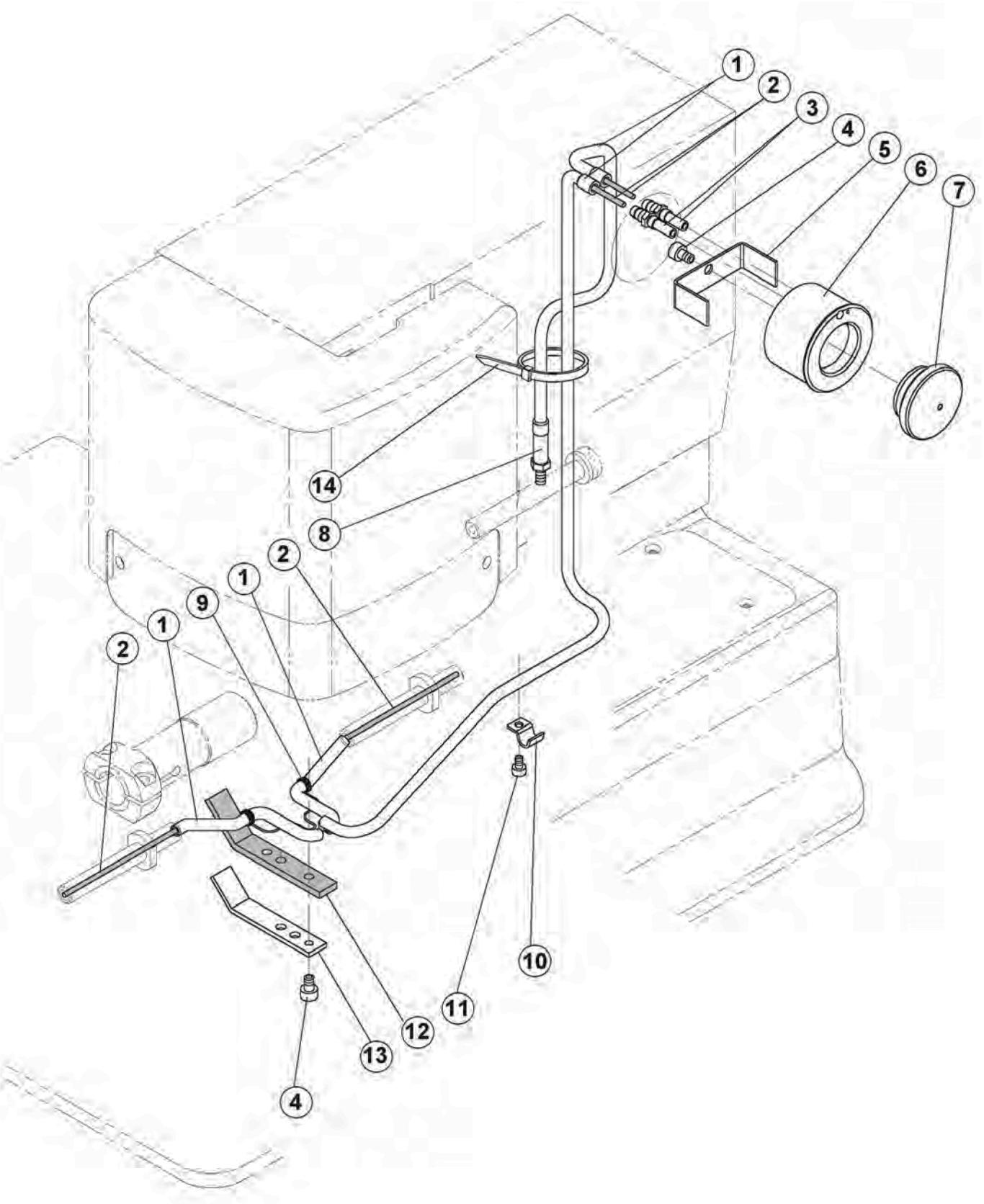

LUBRICATION

DET	PART NUMBER	DESCRIPTION		QTY.
01	24.0141.0.000	Tubing	●●●	1
02	24.0139.0.000	Lubricating Wick	●●●	1
03	22.0229.0.000	Straight Fitting		2
04	08.6000.4.006	M4 x 6 Screw		2
05	22.0120.0.000	Holder		1
06	22.0104.0.000	Oil Gauge Reservoir		1
07	17.0095.1.329	Wheel	●●●	1
08	22.0108.0.000	Wick Holder		1
09	17.0027.1.799	Spring		1
10	17.0082.6.000	Clamp		1
11	08.6000.3.006	M3 x 6 Screw		1
12	17.0094.5.310	Felt	●●●	1
13	22.0107.0.000	Worm Gear Felt Retainer		1
14	12.0008.3.023	Ty-wrap	●●●	1

TABLE CROSSWISE

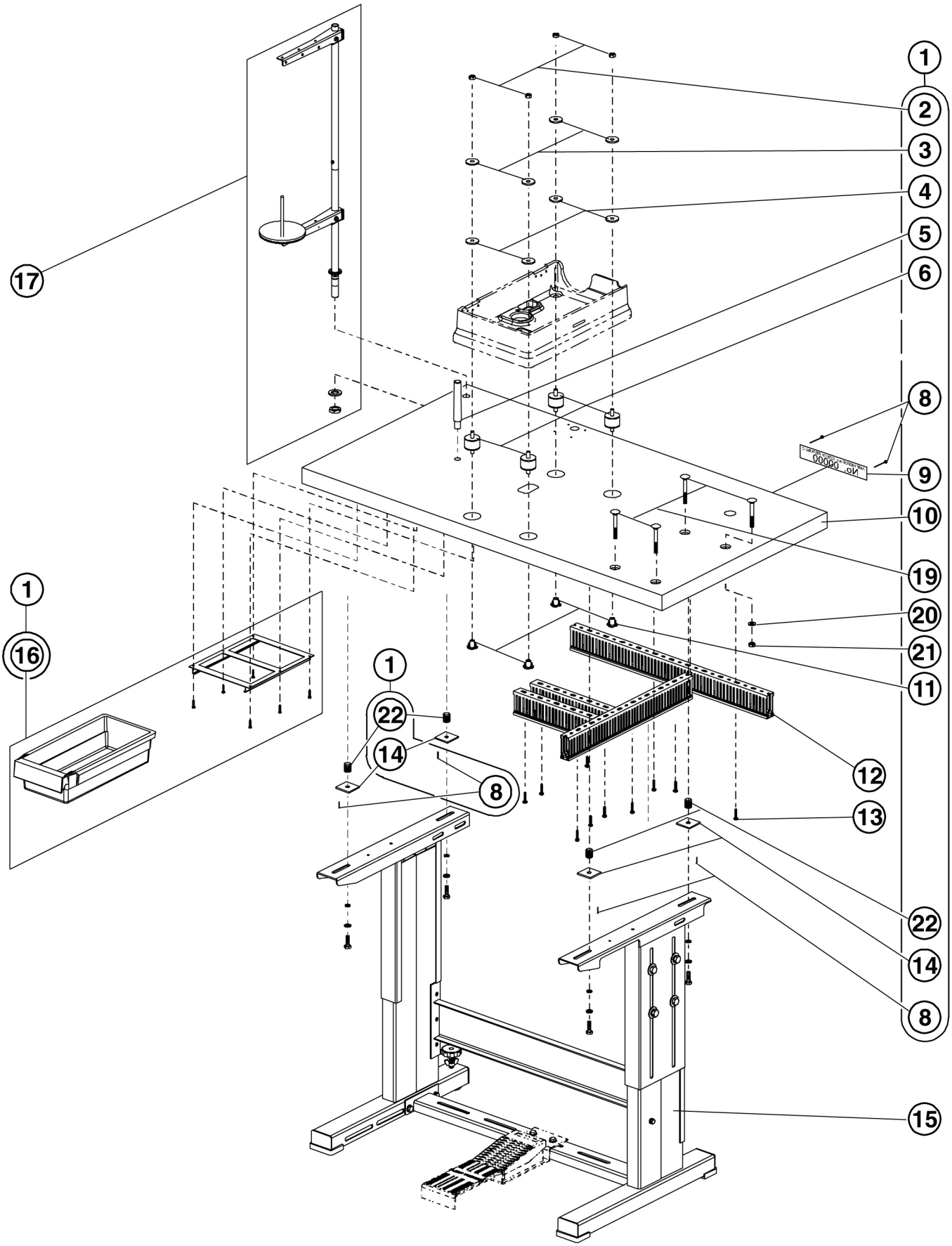

Revised: 12/2024
E-mail: info@amfreece-cars.cz

TABLE CROSSWISE

DET	PART NUMBER	DESCRIPTION	QTY.
01	24.0142.0.050	Table Crosswise Assembly	1
02	08.6700.8.000	M8 Nut	(4)
03	17.0019.0.441	Washer	(4)
04	17.0095.1.272	Washer ●●●	(4)
05	12.0008.6.900	Machine Rest Table Pin	(1)
06	12.0008.6.801	Rubber Spring ●●●	(4)
08	12.1016.1.000	Nail ●●●	(6)
09	04.1416.0.003	Label “No. xxxx”	(1)
10	24.0142.0.000	Table Crosswise ●●●	(1)
11	08.6742.8.000	M8 Nut	(4)
12	24.0059.9.065	Wire Raceway Kit ●●●	1
13	08.6663.5.025	Screw 4,8 - 25	10
14	17.0094.0.200	Washer ●●●	(4)
15	04.9000.2.123	Frame Kit	1
16	12.0008.6.901	Drawer Kit ●●●	(1)
17	22.0219.0.000	Thread Stand	1
19	08.6532.8.055	Screw M8x55	(4)
20	08.6852.8.000	Washer	(4)
21	08.6702.8.000	Nut	(4)
22	08.6752.8.000	Nut	(4)

TABLE PARALLEL

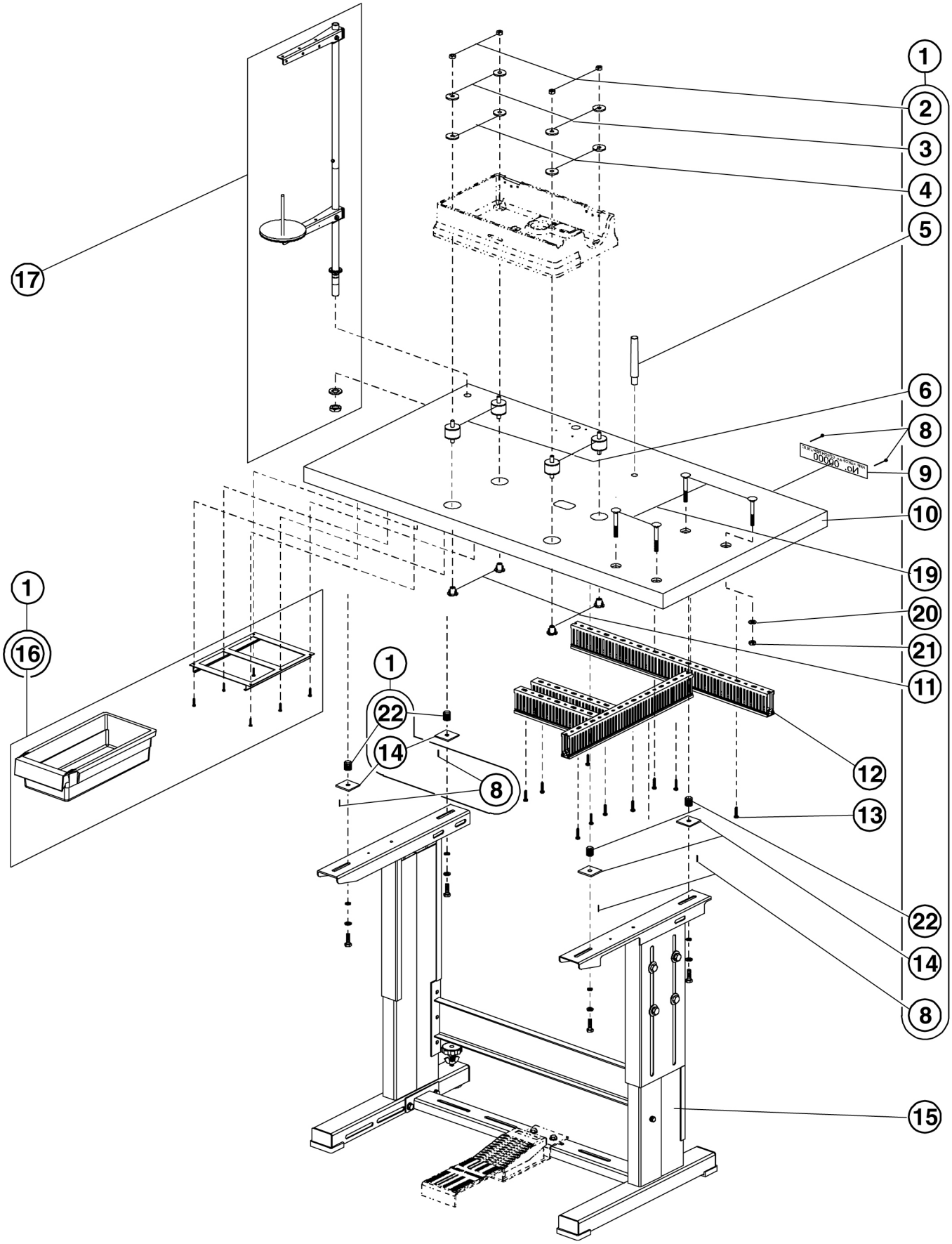

Revised: 12/2024
E-mail: info@amfreece-cars.cz

TABLE PARALLEL

DET	PART NUMBER	DESCRIPTION	QTY.
01	24.0149.0.050	Table Crosswise Assembly	1
02	08.6700.8.000	M8 Nut	(4)
03	17.0019.0.441	Washer	(4)
04	17.0095.1.272	Washer •••	(4)
05	12.0008.6.900	Machine Rest Table Pin	(1)
06	12.0008.6.801	Rubber Spring •••	(4)
08	12.1016.1.000	Nail •••	(6)
09	04.1416.0.003	Label “No. xxxx”	(1)
10	24.0149.0.000	Table Crosswise •••	(1)
11	08.6742.8.000	M8 Nut	(4)
12	24.0059.9.065	Wire Raceway Kit •••	1
13	08.6663.5.025	Screw 4,8 - 25	10
14	17.0094.0.200	Washer •••	(4)
15	04.9000.2.123	Frame Kit	1
16	12.0008.6.901	Drawer Kit •••	(1)
17	22.0219.0.000	Thread Stand	1
19	08.6532.8.055	Screw M8x55	(4)
20	08.6852.8.000	Washer	(4)
21	08.6702.8.000	Nut	(4)
22	08.6752.8.000	Nut	(4)

TABLE EMBEDDED — TKF

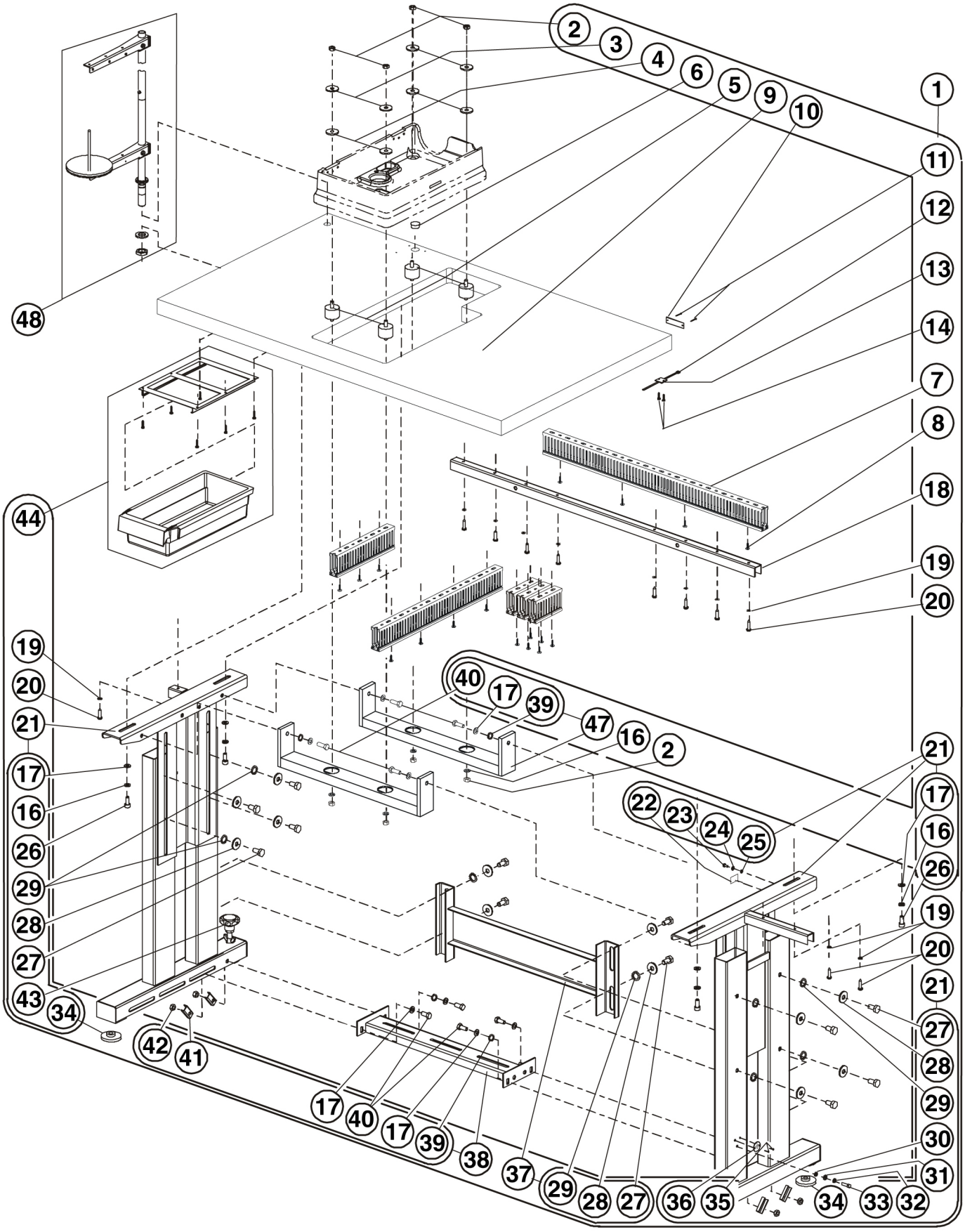

Revised: 12/2024
E-mail: info@amfreece-cars.cz

TABLE EMBEDDED — TKF

DET	PART NUMBER	DESCRIPTION	QTY.
01	04.9024.0.001	Frame Assembly	1
02	08.6700.8.000	Nut M8	(8)
03	17.0019.0.441	Washer	(4)
04	17.0095.1.272	Rubber Washer ●●●	(4)
05	12.0008.6.801	Rubber Spring	(4)
06	12.0008.4.777	Plug	(1)
07	24.0069.9.040	Latch For Kit ●●●	(1)
08	08.6676.3.020	Screw 3,5 x 20	(17)
09	04.9024.0.900	Table ●●●	(1)
10	04.1416.0.003	Label “No. xxxx”	(1)
11	12.1016.1.000	Nail	(2)
12	12.0008.3.023	Ty-wrap ●●●	(1)
13	12.0008.4.058	Clip	(1)
14	08.6652.3.016	Screw 3 x 16	(2)
16	08.6802.8.000	Spring Washer	(4)+((4))
17	08.6852.8.000	Washer	(4)+(4)+((4))
18	04.9024.0.361	Reinfrcement Crossbar	(1)
19	08.6852.5.000	Washer M5	(11)
20	08.6663.5.025	Screw 4,8 x 25	(11)
21	04.9024.0.002	Frame Assembly	(1)
22	12.0008.4.052	Label	((1))
23	08.6012.4.010	Screw M4 x 10	((1))
24	08.6852.4.000	Washer 4,3	((1))
25	08.6832.4.000	Lock Washer M4	((1))
26	08.6312.8.025	Screw M8 x 25	((4))
27	08.6312.0.020	Screw M10 x 20	((12))
28	08.6882.0.000	Washer M10	((12))
29	08.6832.0.000	Washer 10,5	((8+2+2))
30	08.6832.6.000	Lock Washer M6	((1))
31	08.6852.6.000	Washer 6,4	((1))
32	08.6802.6.000	Spring Washer	((1))
33	08.6312.6.020	Screw M6 x 20	((1))
34	12.0008.6.813	Rubber Washer ●●●	((3))
35	12.1016.0.000	Drive Screw	((2))
36	17.0081.6.225	Label	((1))
37	04.9000.0.225	Crossbar Rear	(1)
38	04.9000.0.125	Crossbar Down	(1)
39	08.6832.8.000	Lock Washer M8	((2)+(2))
40	08.6312.8.020	Screw	((4)+(4)+4))
41	12.0008.6.964	Washer - U	((4))
42	08.6702.8.000	Nut M8	(4)
43	12.0008.6.965	Yielding Support	(1)
44	12.0008.6.901	Drawer Kit ●●●	(1)
45	08.6700.6.000	Nut M6	(3)
46	08.6700.6.000	Screw M6 x 40	(1)
47	04.9000.0.345	Crossbar Up Assembly	((1))
48	22.0219.0.000	Thread Stand	1

TABLE UNIVERSAL

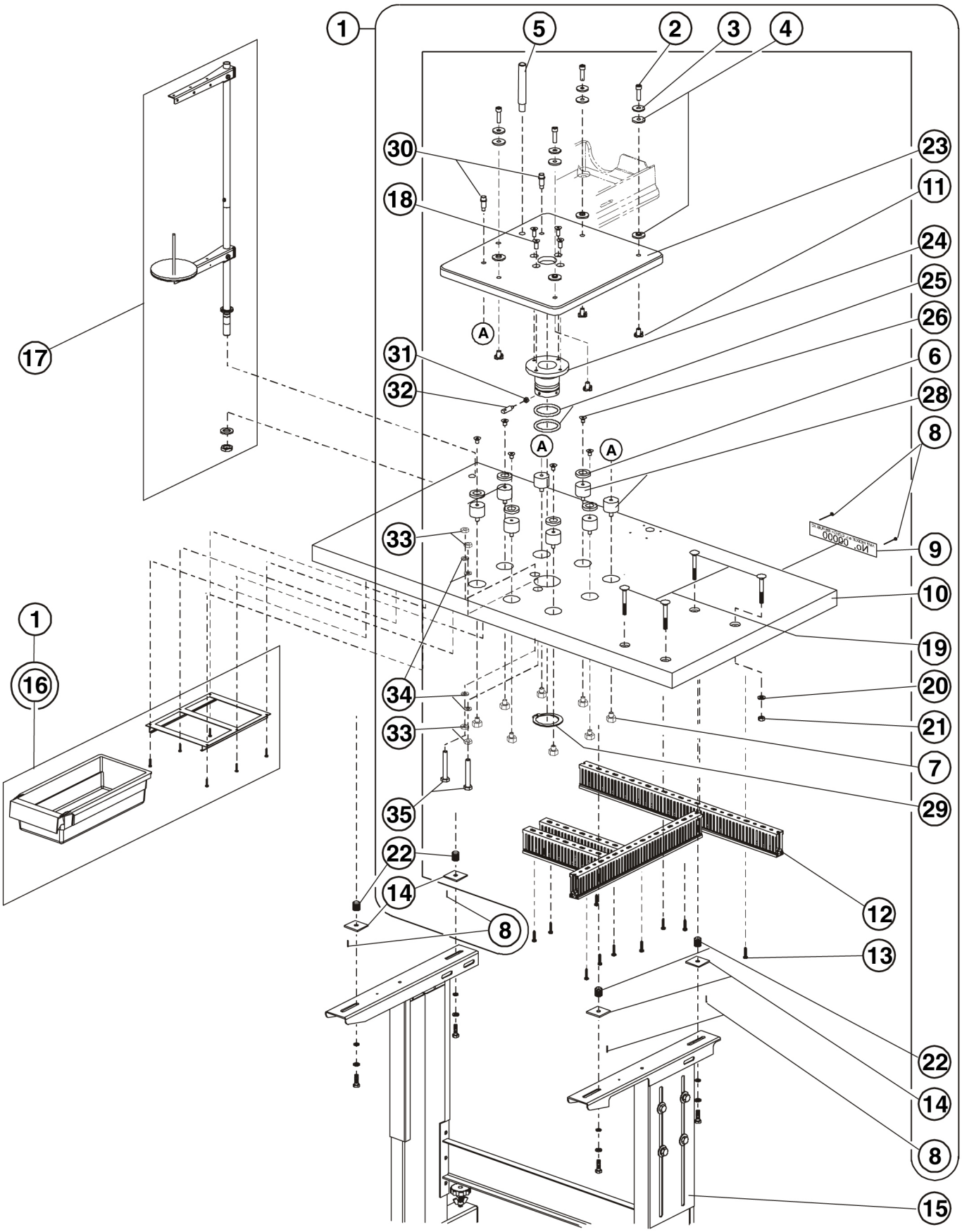

Revised: 12/2024
E-mail: info@amfreece-cars.cz

TABLE UNIVERSAL

DET	PART NUMBER	DESCRIPTION	QTY.
01	24.0150.0.050	Table Assembly	1
02	08.6000.8.030	Screw M8x30	(4)
03	17.0019.0.441	Washer	(4)
04	17.0095.1.272	Washer ●●●	(8)
05	12.0008.6.900	Machine Rest Table Pin	(1)
06	24.0081.0.000	Bearing Disk ●●●	(6)
07	24.0082.0.000	Retaining Nut	
08	12.1016.1.000	Nail ●●●	(6)
09	04.1416.0.003	Label “No. xxxx”	(1)
10	24.0150.0.000	Table ●●●	(1)
11	08.6742.8.000	M8 Nut	(4)
12	24.0059.9.065	Wire Raceway Kit ●●●	1
13	08.6663.5.025	Screw 4,8 - 25	10
14	17.0094.0.200	Washer ●●●	(4)
15	04.9000.2.123	Frame Kit	1
16	12.0008.6.901	Drawer Kit ●●●	(1)
17	22.0219.0.000	Thread Stand	1
18	08.6100.8.020	Screw M8x20	(4)
19	08.6532.8.055	Screw M8x55	(4)
20	08.6852.8.000	Washer	(4)
21	08.6702.8.000	Nut	(4)
22	08.6752.8.000	Nut	(4)
23	24.0079.0.000	Base Plate	(1)
24	24.0086.0.000	Pivot, Base Subplate	(1)
25	12.0008.6.807	O Ring 50x6	(2)
26	08.6100.8.012	Screw M8x12	(6)
28	24.0084.0.000	Cylindrical Vibrator Isolator	(8)
29	12.1040.1.009	Ring 58	(1)
30	24.0087.0.000	Shoulder Screw	(2)
31	08.6700.6.000	Nut M6	(1)
32	24.0089.0.000	Stop Pin	(1)
33	08.6710.0.300	Nut M10	(4)
34	08.6850.0.000	Washer M10	(4)
35	08.6300.0.070	Screw M10x70	(2)

ELECTRICAL — I

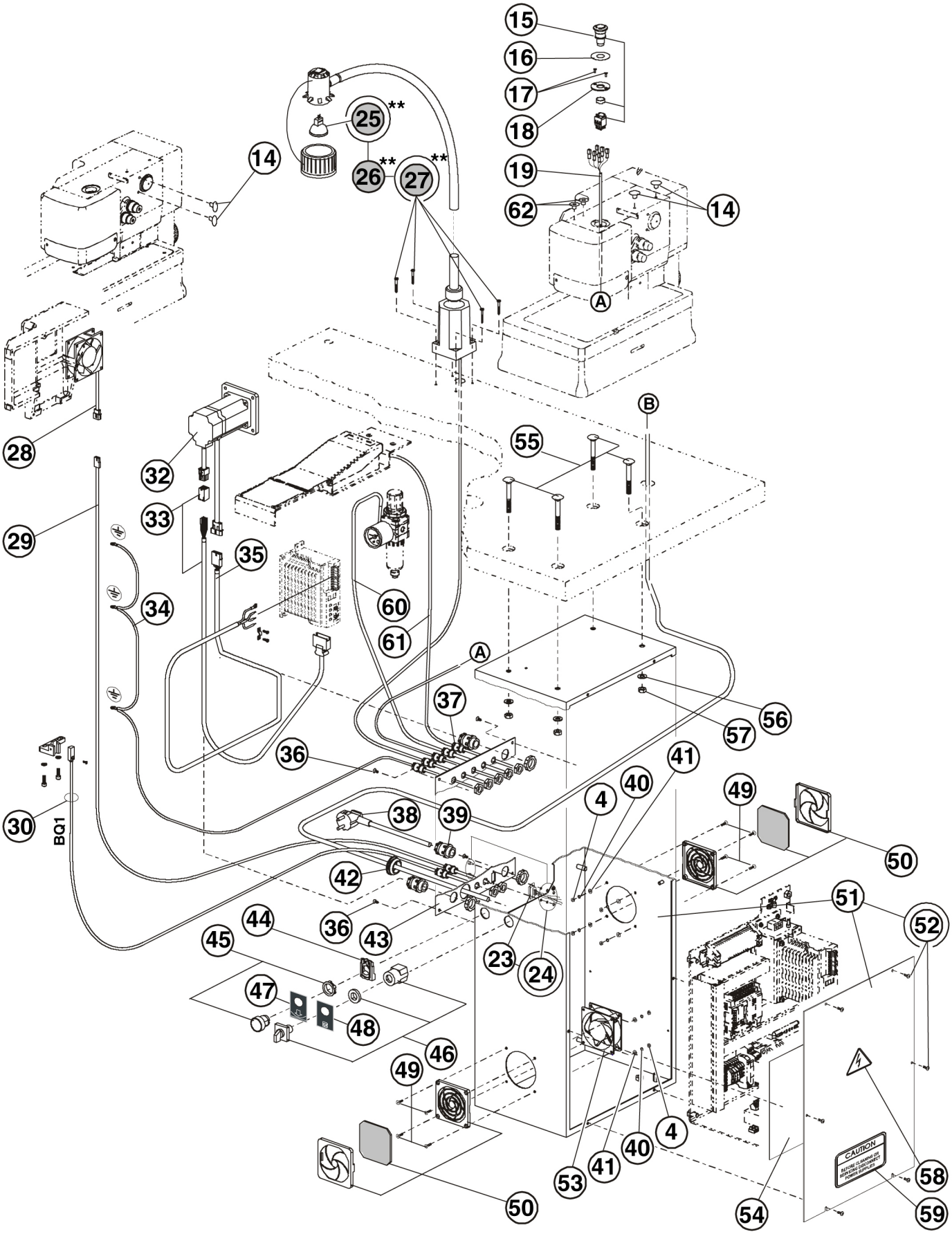

ELECTRICAL — I

DET	PART NUMBER	DESCRIPTION	QTY.
04	08.6702.4.000	Nut M4	8
14	12.0008.4.570	Plug	2
15	12.0008.4.563	Emergency Stop Button	1
16	12.8000.0.047	Label	1
17	08.6102.3.008	Screw	2
18	24.0148.0.000	Emergency Stop Cover	1
19	24.0069.9.023	Emergency Stop Cable	1
23	24.0069.9.004	Cable	1
24	12.0008.4.710	Screw Kit	1
25**	12.0008.4.679	Bulb 12V/12W	(1)**
26**	12.0008.4.403	Halogen Lamp Kit 12 V Assembly	1**
27**	—	Screw	(4)**
28	24.0059.9.069	Fan	1
29	24.0069.9.027	Fan Cable	1
30	24.0069.9.006	End of Cycle Sensor with Cable (BQ1)	1
32	24.0059.9.064	Servomotor Assembly	1
33	24.0069.9.008	Encoder Cable	1
34	—	Cable	1
35	24.0069.9.002	Motor Power Cable	1
36	08.6100.4.010	Screw	4
37	12.0008.4.207	Bushing ●●●	7
38	12.0008.4.713	Cable	1
39	12.0008.4.231	Bushing	3
40	08.6802.4.000	Washer	4
41	08.6852.4.000	Washer	4
42	12.0008.4.366	Plug PG 29	1
43	24.0138.0.000	Connectors Plate ISBH	1
44	12.0008.4.863	Block	1
45	12.0008.4.861	Switch (Black)	1
46	12.0008.4.835	Switch ON — OFF	1
47	12.8000.0.041	Label (Clamp Up/Down)	1
48	12.8000.0.040	Label	1
49	08.6100.4.014	Screw	1
50	12.0008.4.762	Fan Cover With Filter ●●●	2
51	70.4165.1.125	Electrical Box	1
52	08.6032.4.010	Screw M4x10	(6)
53	24.0059.9.017	Fan	1
54	12.8000.0.044	Electrical Diagram Label	1

** — Extra Parts

ELECTRICAL — I

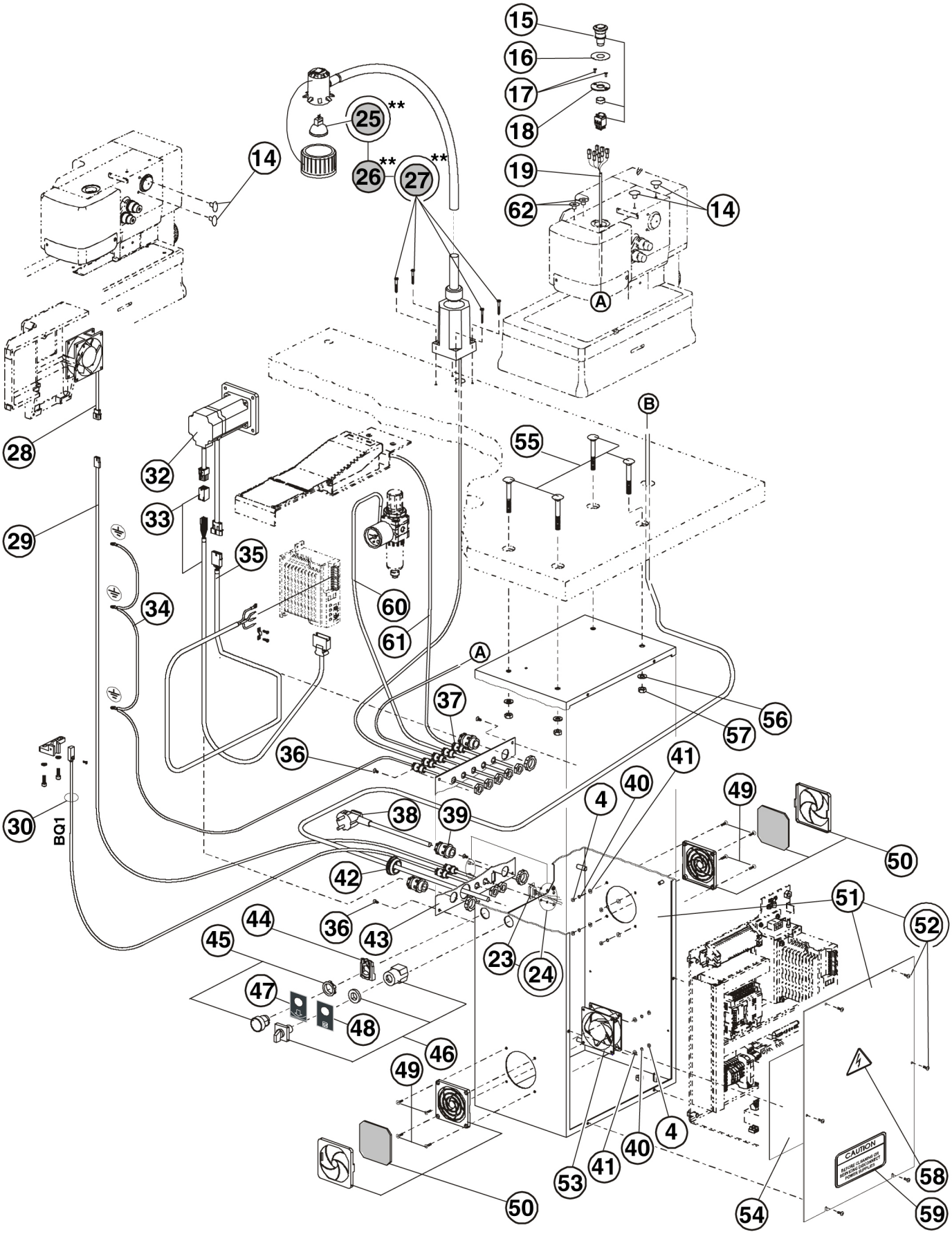

Revised: 12/2024
E-mail: info@amfreece-cars.cz

ELECTRICAL — I

DET	PART NUMBER	DESCRIPTION	QTY.
55	See Page 3-32	Screw M8x55	—
56	See Page 3-32	Washer	—
57	See Page 3-32	Nut	—
58	12.0008.4.155	Label	1
59	00.2751.3.602	Label “CAUTION”	1
60	See Page 3-51	Pressure Gauge	—
61	See Page 3-47	Cable	—
62	08.6215.4.006	Screw	2

** — Extra Parts

ELECTRICAL — I TABLE EMBEDDED

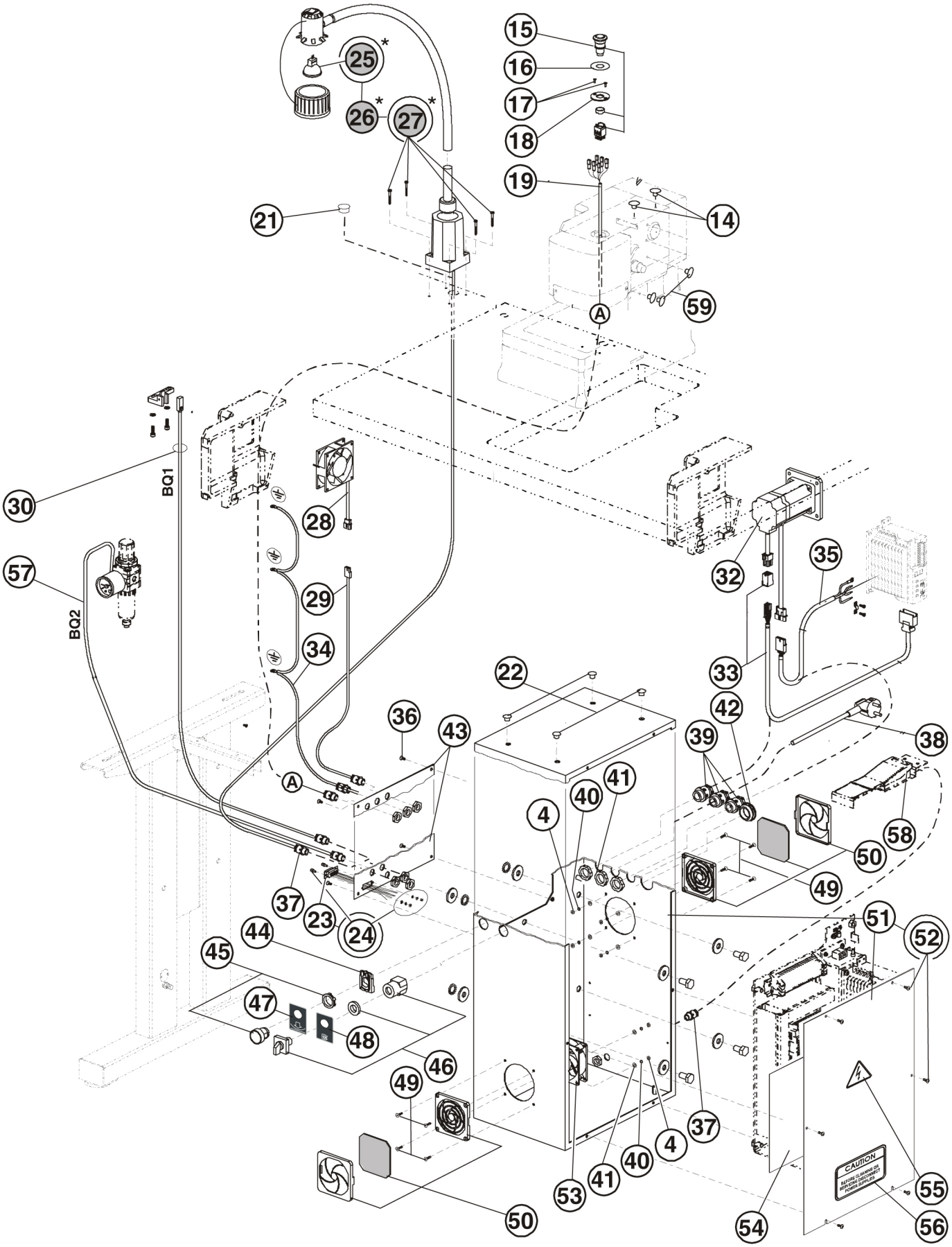

ELECTRICAL — I TABLE EMBEDDED

DET	PART NUMBER	DESCRIPTION	QTY.
04	08.6702.4.000	Nut M4	8
14	12.0008.4.570	Plug	2
15	12.0008.4.563	Emergency Stop Button	1
16	12.8000.0.047	Label	1
17	08.6102.3.008	Screw	2
18	24.0148.0.000	Emergency Stop Cover	1
19	24.0069.9.023	Emergency Stop Cable	1
21	12.0008.4.777	Plug	1
22	12.0008.4.215	Plug	4
23	24.0069.9.004	Cable	1
24	12.0008.4.710	Screw Kit	1
25*	12.0008.4.679	Bulb 12V/12W	(1)
26*	12.0008.4.403	Halogen Lamp Kit 12 V Assembly	1
27*	—	Screw	(4)
28	24.0059.9.069	Fan	1
29	24.0069.9.027	Fan Cable	1
30	24.0069.9.006	End of Cycle Sensor with Cable	1
32	24.0059.9.064	Servomotor Assembly	1
33	24.0069.9.042	Encoder Cable	1
34	—	Cable	1
35	24.0069.9.043	Motor Power Cable	1
36	08.6100.4.010	Screw	4
37	12.0008.4.207	Bushing ●●●	7
38	12.0008.4.713	Cable	1
39	12.0008.4.231	Bushing	3
40	08.6802.4.000	Washer	4
41	08.6852.4.000	Washer	4
42	12.0008.4.366	Plug PG 29	1
43	04.9024.0.650	Connectors Plate ISBH	1
44	12.0008.4.863	Block	1
45	12.0008.4.861	Switch (Black)	1
46	12.0008.4.835	Switch ON — OFF	1
47	12.8000.0.041	Label (Clamp Up/Down)	1
48	12.8000.0.040	Label (Main Switch)	1
49	08.6100.4.014	Screw	1
50	12.0008.4.472	Fan Cover With Filter ●●●	2
51	04.9024.0.500	Electrical Box	1
52	08.6032.4.010	Screw M4x10	(6)
53	24.0059.9.017	Fan	1
54	12.8000.0.065	Electrical Diagram Label	1

* — Extra Parts

ELECTRICAL — I TABLE EMBEDDED

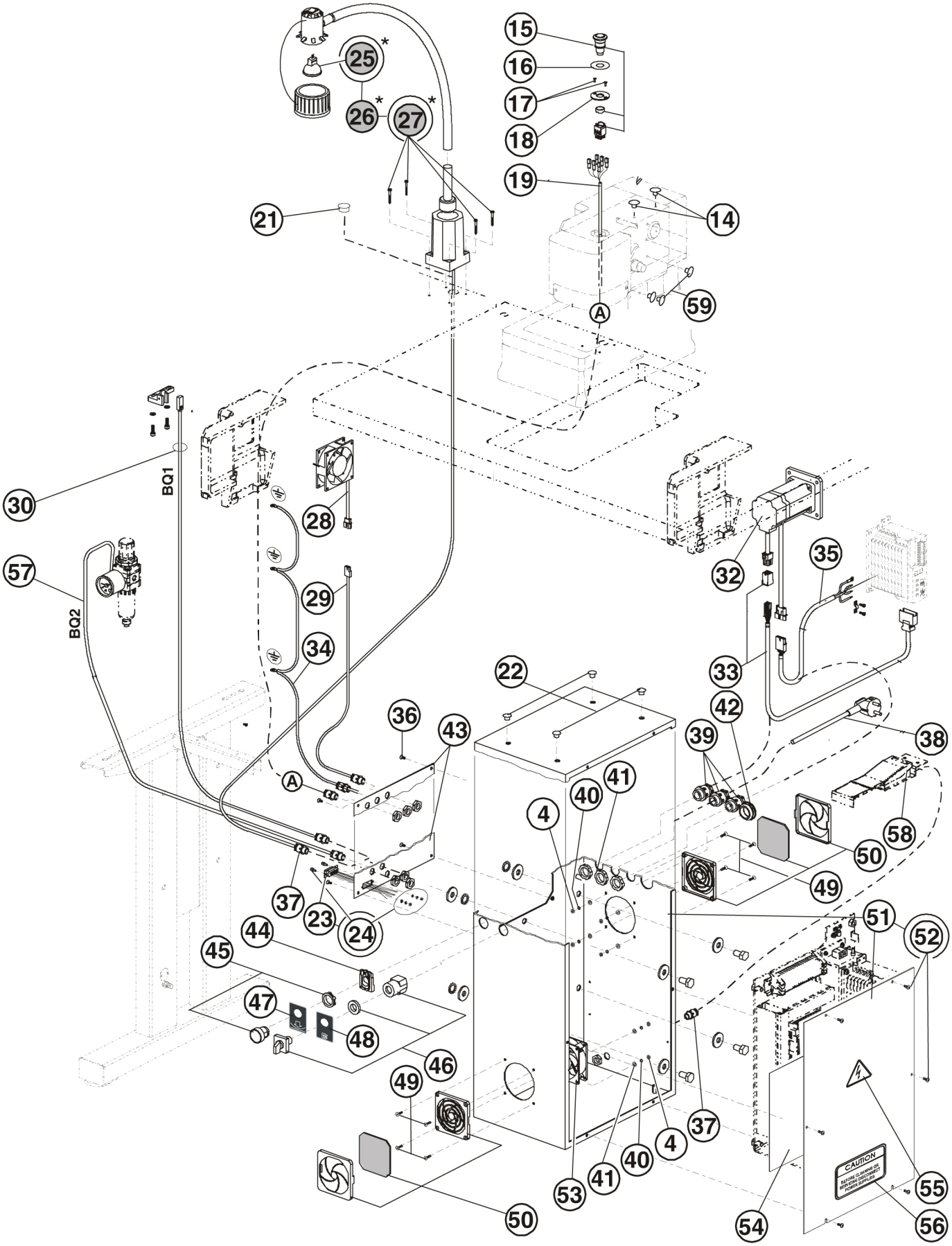

ELECTRICAL — I TABLE EMBEDDED

DET	PART NUMBER	DESCRIPTION	QTY.
55	12.0008.4.155	Label	1
56	00.2751.3.602	Label “CAUTION”	1
57	See Page 3-51	Pressure Gauge	—
58	See Page 3-47	Cable	—
59	12.0010.4.094	Plug	3

* — Extra Parts

ELECTRICAL — II

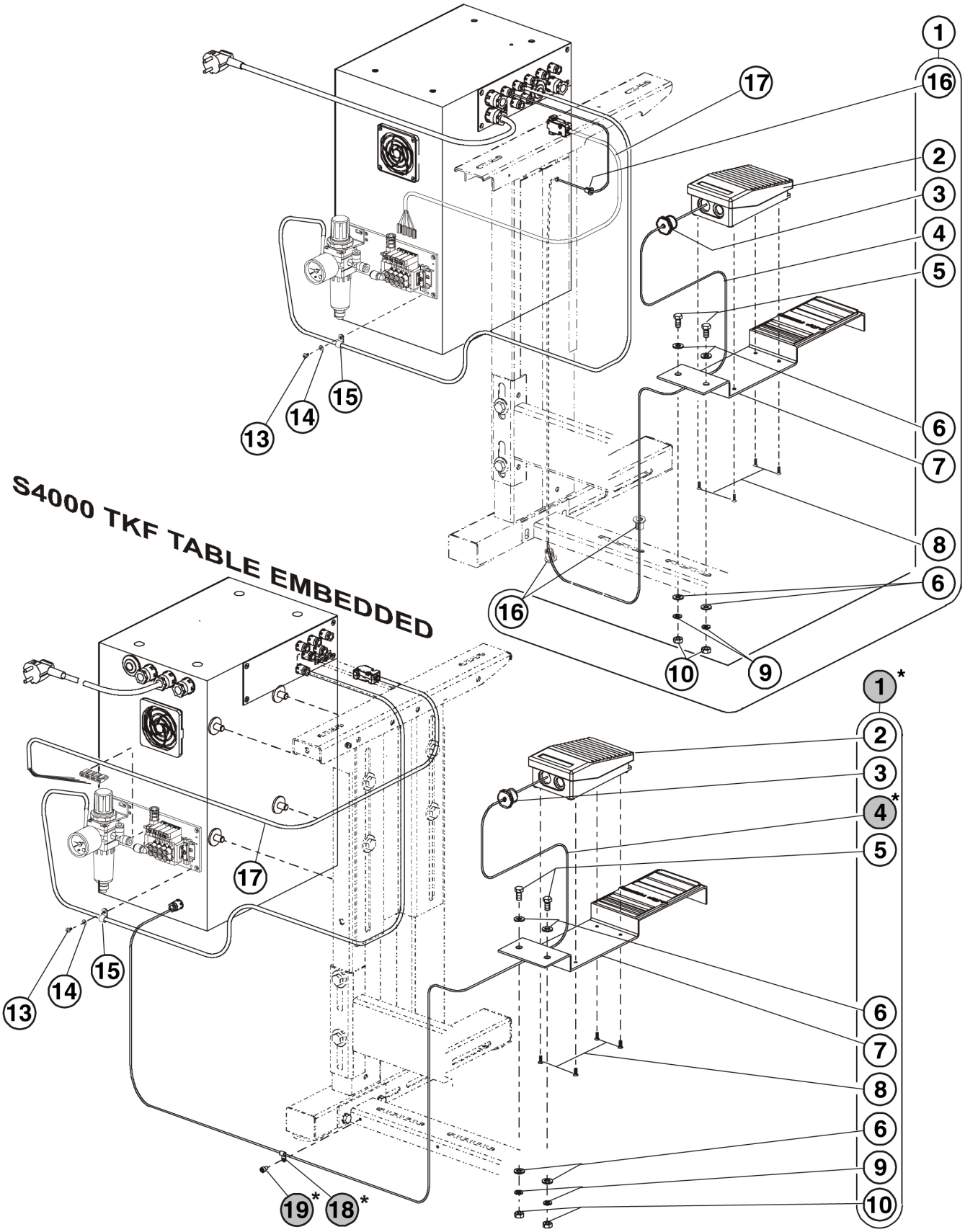

ELECTRICAL — II

DET	PART NUMBER	DESCRIPTION	QTY.
01	24.0069.9.009	Pedal Assembly	1
01*	24.0069.9.038	Pedal Assembly	1*
02	06.8800.0.001	Pedal	(1)
03	12.0008.4.296	Bushing	(1)
04	24.0069.9.003	Cable	(1)
04*	12.0008.4.306	Cable	(1)*
05	08.6312.8.020	Screw M8x20	(2)
06	08.6852.8.000	Washer M8	(4)
07	24.0097.0.000	Holder Pedal	(1)
08	08.6100.4.012	Screw M4x12	(4)
09	08.6802.8.000	Spring Washer M8	(2)
10	08.6702.8.000	Nut M8	(2)
13	12.0008.4.280	Cord Clamp	1
14	08.6852.4.000	Washer M4	1
15	08.6683.4.007	Screw M4x7	1
16	12.0008.4.214	Bushing	(3)
17	12.0008.3.833	Cable Valve	1
18*	12.0008.4.279	Cord Clamp	(1)*
19*	08.6000.5.008	Screw M5 x 8	(1)*

* — S4000 TKF Table Embedded

ELECTRICAL — III

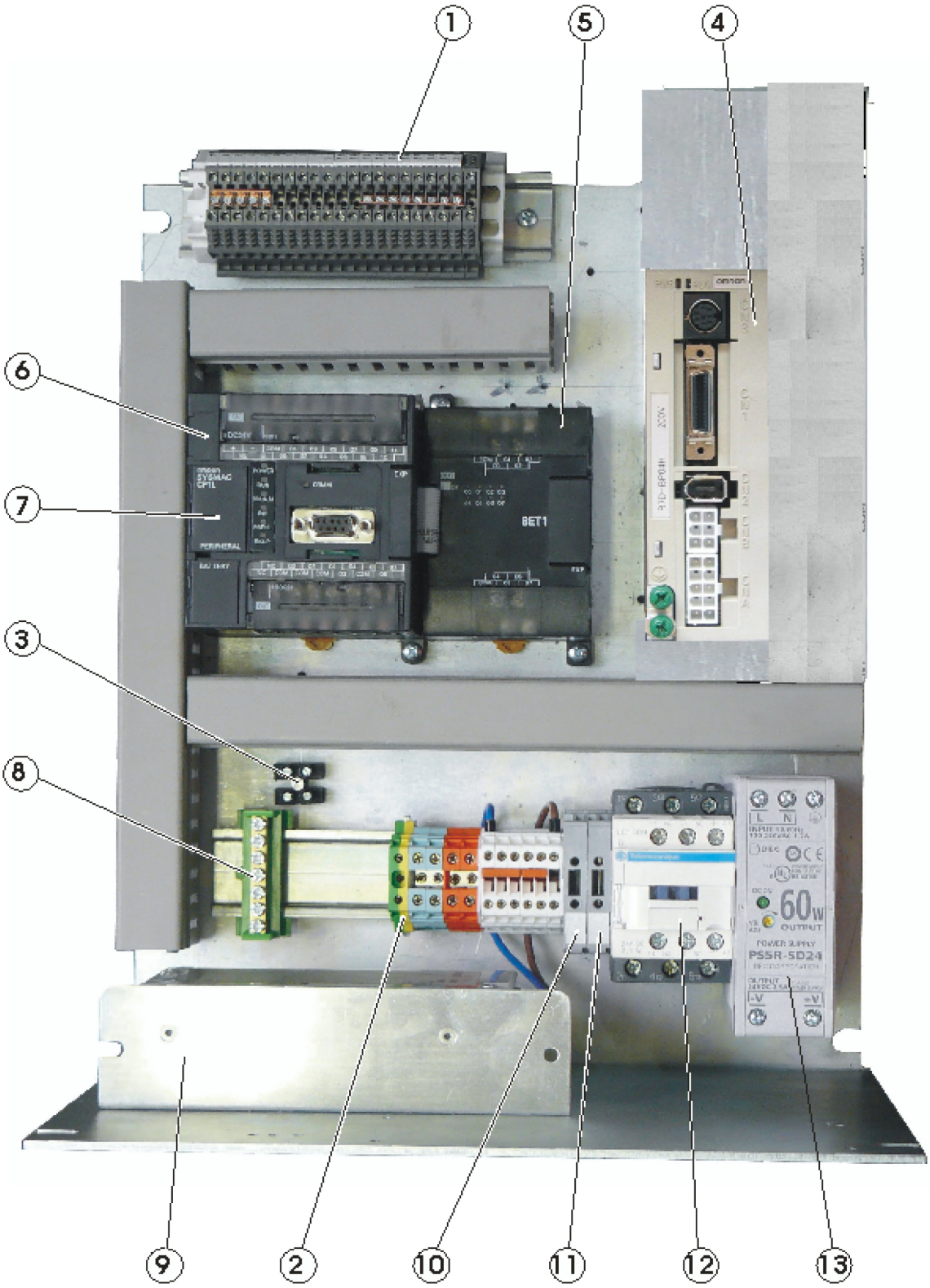

ELECTRICAL — III

DET	PART NUMBER	DESCRIPTION		QTY.
01		Terminal X1		1
02		Terminal XO		1
03		Terminal X12		1
04	24.8001.2.005	Servo	(U1)	1
05	12.0010.4,071	Extension Block	(FXON)	1
06	24.8001.2.001	PCL		1
07	12.0010.4.067	Port RS 232		1
08	12.0008.4.050	GND Bridge		1
09	12.0010.4.078	Filter	(Z2)	1
10	12.0008.4.665	Fuse T2A		1
11	12.0008.4.664	Fuse T10A		1
12	12.0008.4.833	Contactor	(KM1)	1
13	12.0010.4.071	Power	(GS1)	1

PANEL KIT

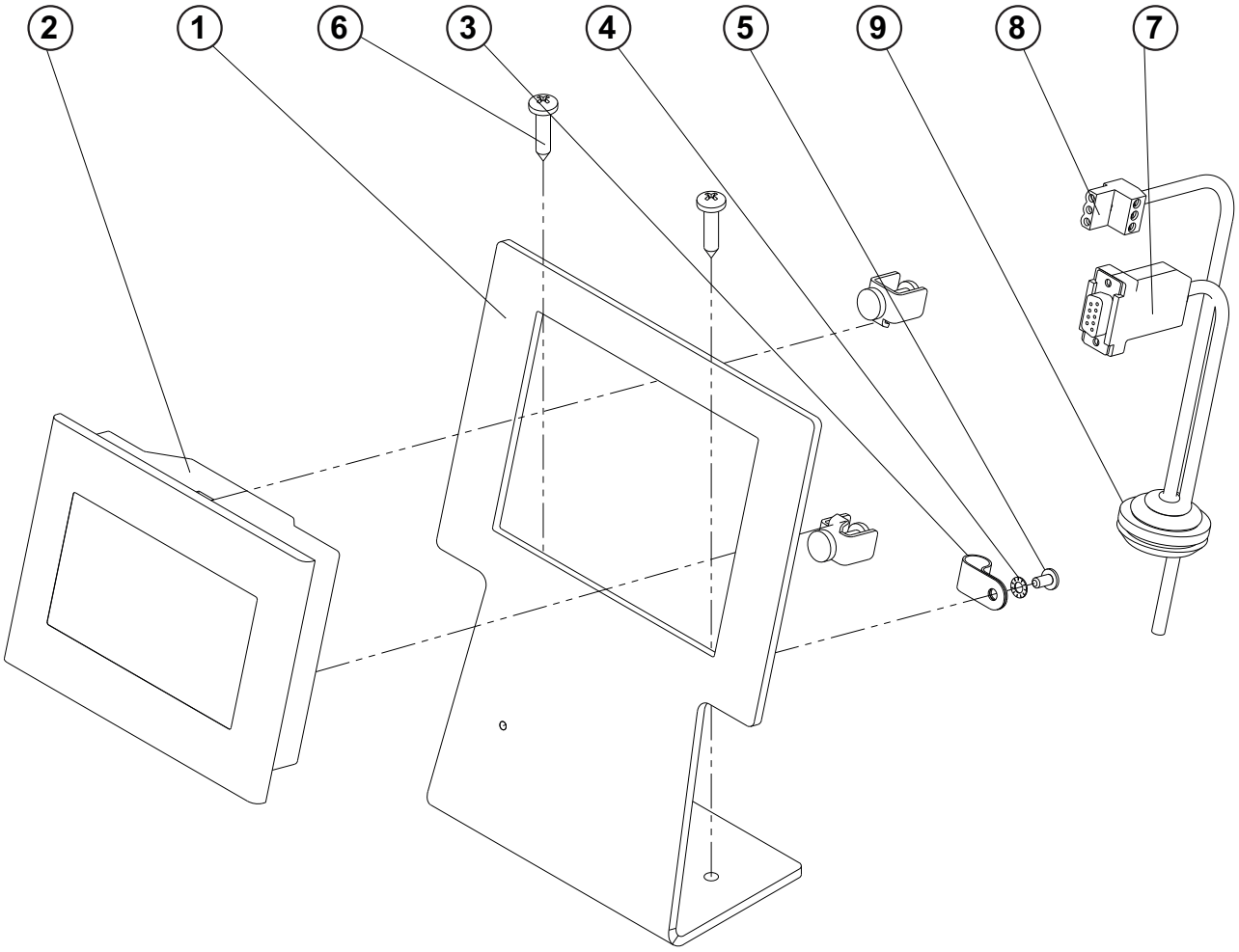

PANEL KIT

DET	PART NUMBER	DESCRIPTION	QTY.
01	24.0198.0.000	PANEL HOLDER-DELTA	1
02	24.8001.2.023	DISPLAY	1
03	07.6600.0.004	CLAMP CABLE	1
04	08.6832.4.000	WASHER M4	1
05	08.6032.4.008	SCREW M4-8	1
06	08.6663.5.025	SCREW 4,8-25	2
07	06.2400.0.023	CABLE DISPLAY DELTA	1
08	06.2400.0.019	CABLE DISPLAY DELTA POWER	1
09	12.0008.4.366	RUBBER PLUG 29	1

PNEUMATICS

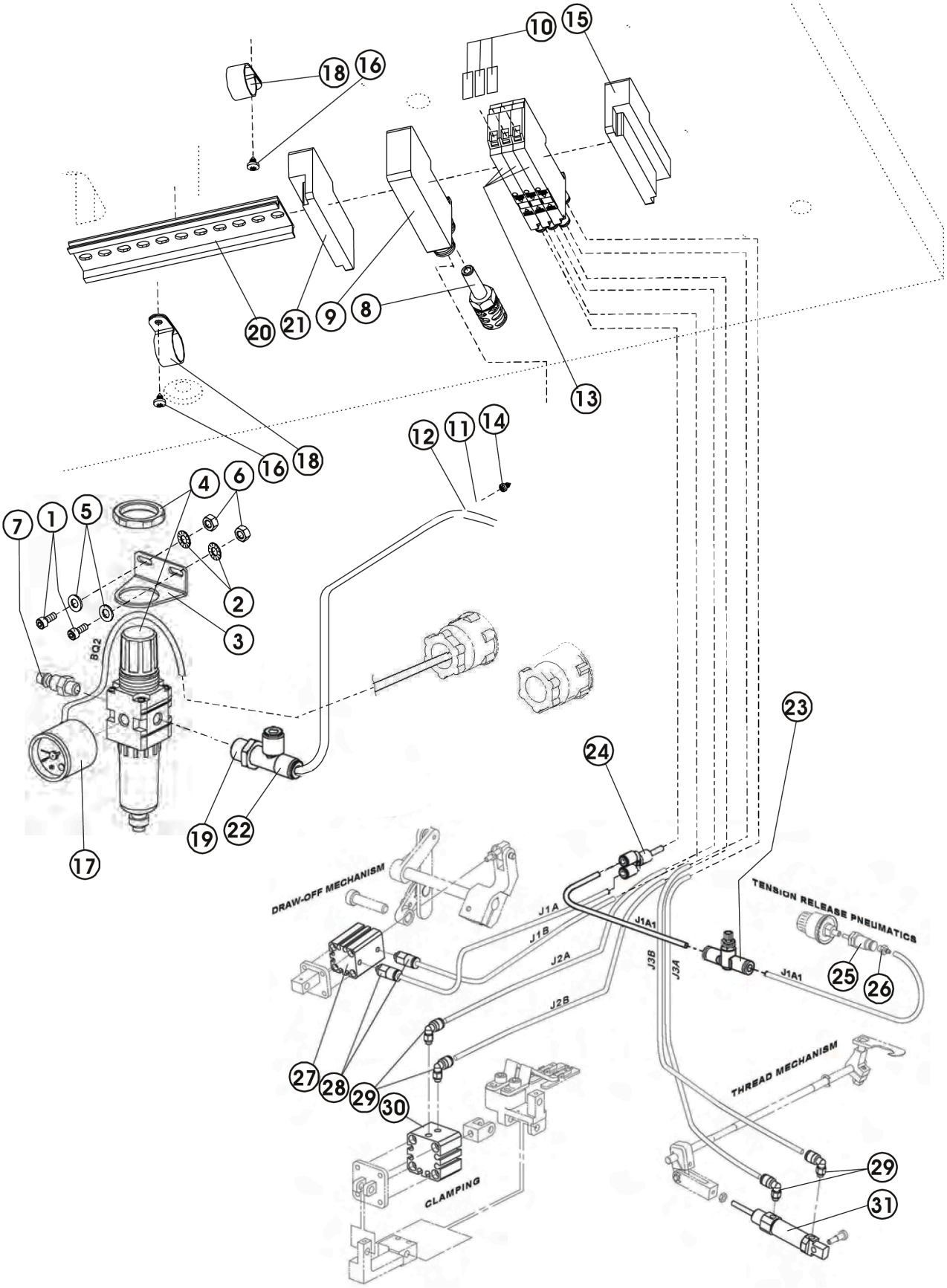

Revised: 12/2024
E-mail: info@amfreece-cars.cz

PNEUMATICS

DET	PART NUMBER	DESCRIPTION		QTY.
01	08.6000.5.012	Screw M5x12		2
02	08.6832.5.000	Washer M5		2
03	12.0008.3.659	Regulator Holder		1
04	12.0008.3.753	Regulator		1
05	08.6850.5.000	Washer M5		2
06	08.6700.5.000	Nut M5		2
07	12.0008.3.420	Connector		1
08	12.0008.3.484	Silencer		1
09	12.0008.3.829	Air Supply Block Assembly		1
10	12.8000.0.016	Label Kit		1
11	12.0008.4.058	Clip	●●●	3
12	12.0008.3.023	Ty-wrap	●●●	3
13	12.0008.3.828	Pneumatic Valve		3
14	08.6662.3.006	Screw		2
15	12.0008.3.830	Rail Stopper		1
16	08.6683.4.007	Screw		2
17	12.0008.3.418	Pressure Gauge		1
18	12.0008.4.280	Clamp		2
19	12.0008.3.605	Connector		1
20	12.0008.3.832	DIN Rail		1
21	12.0008.3.831	Rail Stopper		1
22	12.0008.3.606	Connector	●●●	1
23	12.0008.3.430	Speed Controller	●●●	1
24	12.0008.3.623	Connector		1
25	12.0008.3.413	Cylinder		1
26	12.0008.3.409	Connector		1
27	12.0008.3.433	Knife Cylinder		1
28	12.0008.3.409	Connector		2
29	12.0008.3.411	Connector	●●●	4
30	12.0008.3.412	Clamp Cylinder	●	1
31	24.0050.0.000	Trimmer Cylinder		1
32	24.0145.1.000	Air Tubing 6x1 BL J0I1 = 1500 mm Air Tubing 4x0,75 BL J1A = J1B = J1A1= J2A = J2B = J3A = J3B = 600 mm	●●●	1

ACCESSORIES — EXTRA PARTS

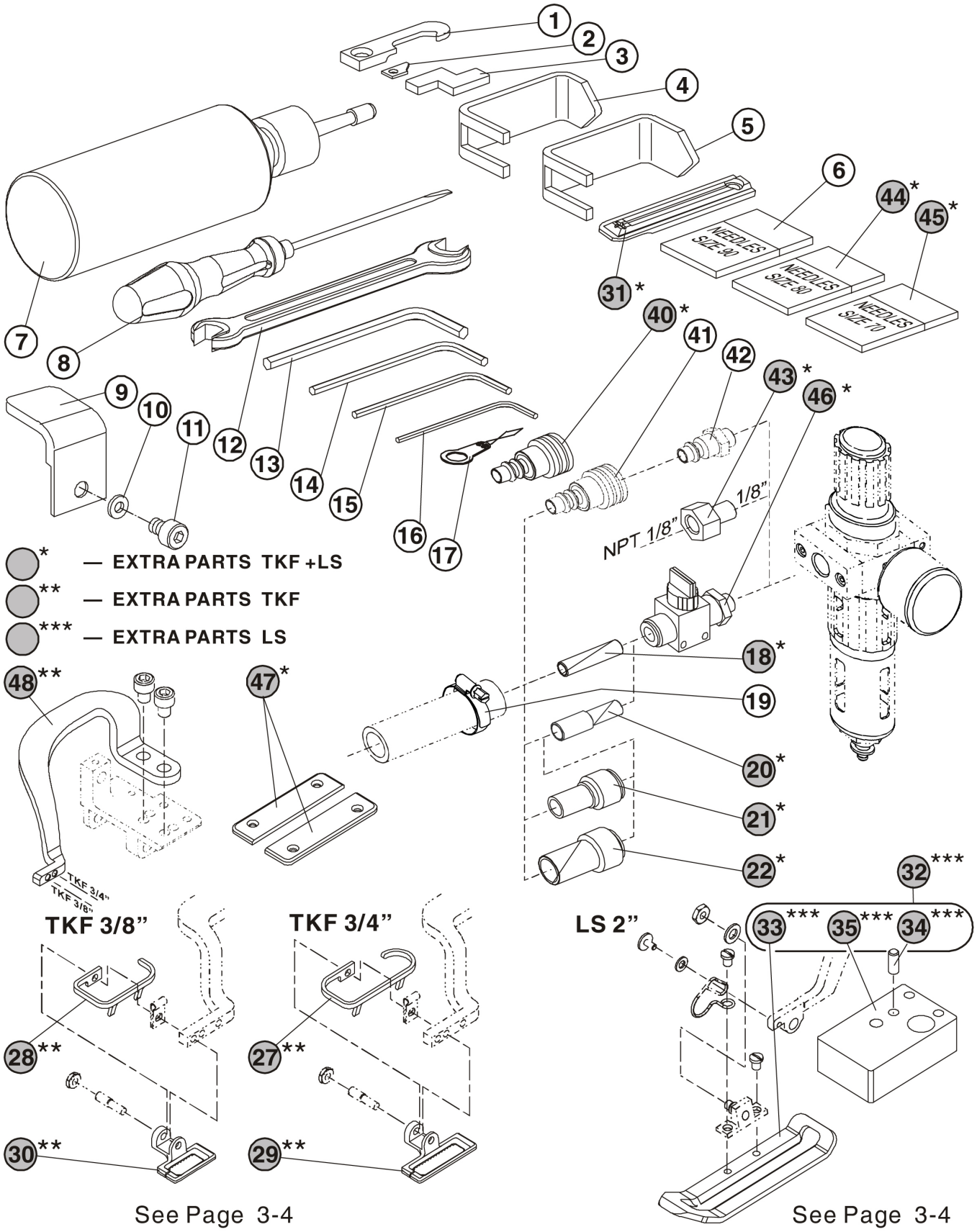

See Page 3-4

See Page 3-4

Revised: 12/2024
E-mail: info@amfreece-cars.cz

ACCESSORIES — EXTRA PARTS

DET	PART NUMBER	DESCRIPTION	QTY.
01	20.0093.2.004	Trimmer Hook	1
02	20.0094.0.000	Trimmer Knife	1
03	22.0209.0.000	Looper Gauge	1
04	24.0030.0.000	Main Shaft Pulley Bracket	1
05	24.0024.0.000	Needle Bar Shaft Pulley Bracket	1
06	02.0750.2.110	Needles, Size 90	10
07	05.1322.0.000	Oiler ●●●	1
08	12.0008.6.001	Screwdriver	1
09	22.0213.0.000	Bracket	1
10	08.6850.4.000	Washer M4	1
11	08.6000.4.005	Screw M4x5	1
12	12.0008.6.109	Wrench	1
13	12.0008.6.102	Allen Key Wrench 4	1
14	12.0008.6.101	Allen Key Wrench 3	1
15	12.0008.6.112	Allen Key Wrench 2-1/2	1
16	12.0008.6.100	Allen Key Wrench 2	1
17	12.0008.6.105	Needle Threader	1
18	12.0008.3.464	Connector	—
19	12.0008.3.251	Air Tubing Clamp	1
20	12.0008.3.466	Connector	—
21	12.0008.3.467	Connector	—
22	12.0008.3.465	Connector	—
27**	20.0767.1.003	Needle Guard *3/4”	—
28**	20.0767.1.002	Needle Guard *3/8”	—
29**	20.0650.0.340	Clamp Foot *3/4”	—
30**	20.0650.0.240	Clamp Foot *3/8”	—
31*	24.3206.0.000	Throat Plate, 3mm (.118”) bite	—
32***	24.9920.9.989	Clamp Foot 2” - Assembly	—
33***	20.0650.1.706	Clamp Foot 2”	(1)
34***	07.6045.0.046	Pin	(1)
35***	22.3250.0.000	Clamp Arm Spacer 2”	(1)
40*	12.0008.3.607	Connector Dia 8	—
41	12.0008.3.608	Connector Dia 10	1
42	See page 3-51	Connector	1
43*	12.0008.3.081	Pneumatic Adapter (1/8” / NPT 1/8”)	—
44*	02.0750.2.100	Needle, Size 80	—
45*	02.0750.2.109	Needle, Size 70	—
46*	12.0008.3.463	Handvalve	—
47*	20.0649.1.042	Clamping Mat - Flat	2
48**	24.3208.0.000	Clamping Arm	1

* ** *** - EXTRA PARTS

ACCESSORIES — CLAMPING

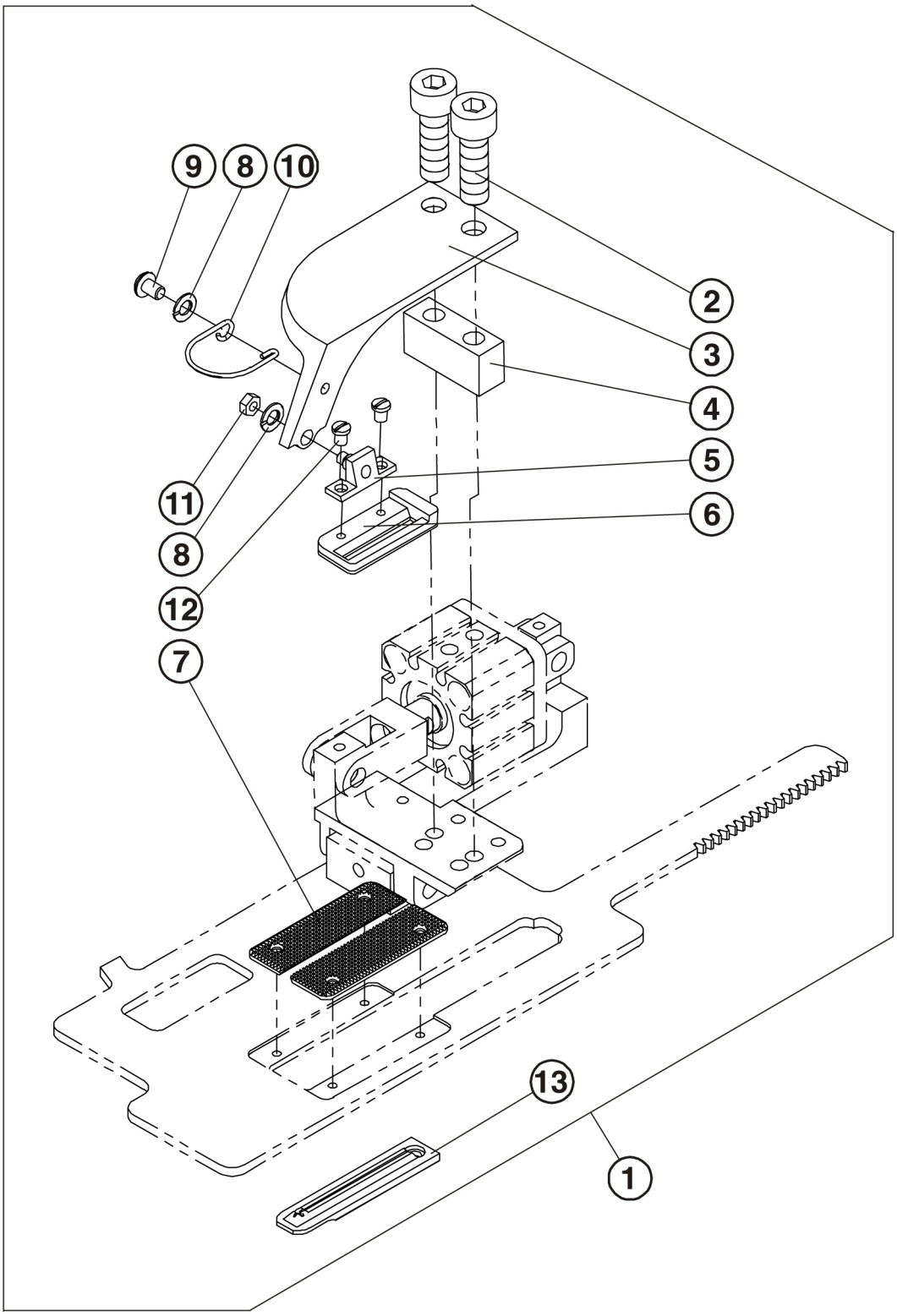

Revised: 12/2024
E-mail: info@amfreece-cars.cz

ACCESSORIES — CLAMPING

DET	PART NUMBER	DESCRIPTION	QTY.
01	03.5524.0.032	Clamping Bite 1,5-2 mm	1
02	08.6000.6.025	Screw M6-25	(2)
03	24.3218.0.000	Clamp Arm	(1)
04	24.3219.0.000	Distance	(1)
05	22.3251.0.000	Bracekt Assembly	(1)
06	24.3217.0.000	Clamp Foot-Narow Bite	(1)
07	24.3215.0.000	Clamping Mat - Narow Bite	(2)
08	08.6800.4.000	Washer 4,1	(2)
09	08.6200.4.006	Screw M4-6	(1)
10	24.3306.0.000	Needle Guards	(1)
11	22.0179.0.000	Nut	(1)
12	01.2563.0.000	0,52x0,17L Screw	(2)
13	24.3216.0.000	Throat Plate - Narow Bite	(1)

EXTRA PARTS - ROLLER KIT

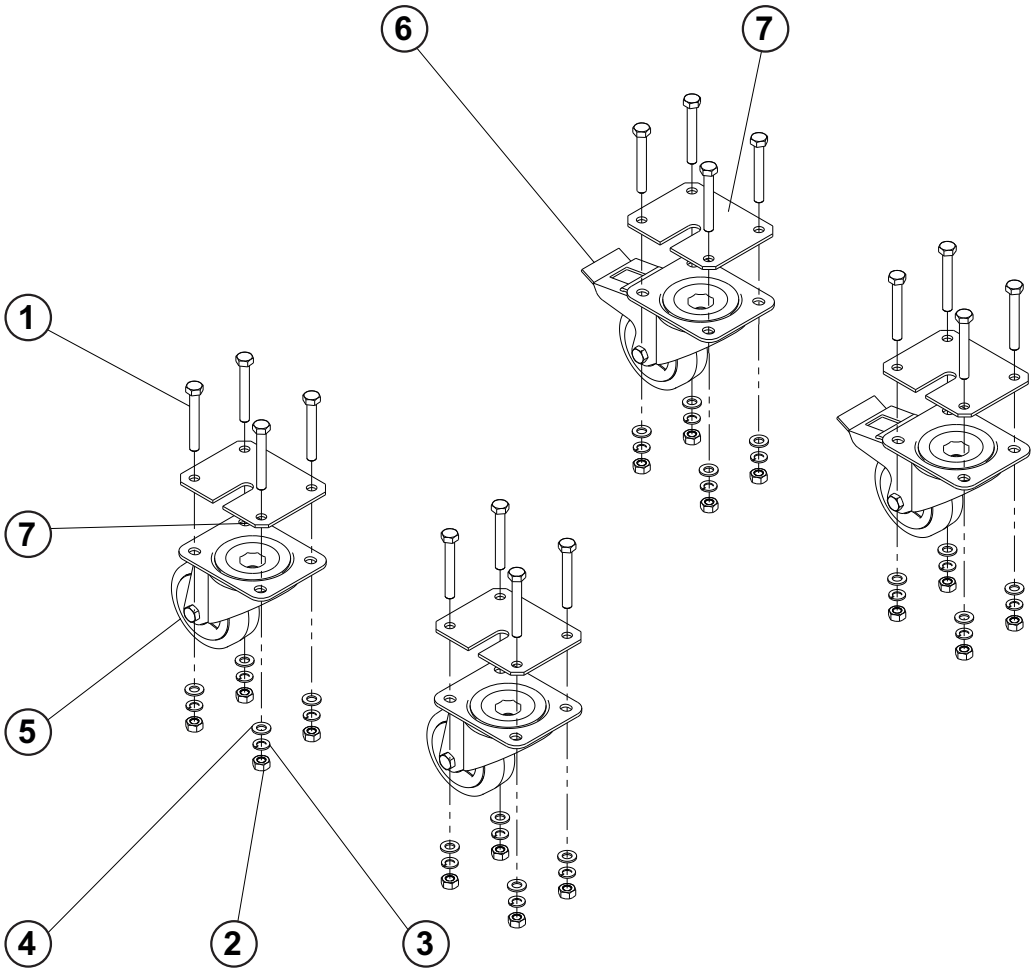

EXTRA PARTS - ROLLER KIT

DET	PART NUMBER	DESCRIPTION	QTY.
01	08.6312.8.060	SCREW M8-60	16
02	08.6702.8.000	NUT M8	16
03	08.6802.8.000	SPRING WASHER M8	16
04	08.6852.8.000	WASHER M8	16
05	12.0008.6.527	ROLLER	2
06	12.0008.6.528	ROLLER WITH BRAKE	2
07	24.0171.0.000	PLATE	4

INDEX

PART NUMBER	PAGE	DET	QTY	PART NUMBER	PAGE	DET	QTY	PART NUMBER	PAGE	DET	QTY
00.2751.3.602	3-45	59	1	04.9024.0.361	3-39	18	(1)	08.6000.4.005	3-9	5	4
00.2751.3.602	3-49	56	1	04.9024.0.500	3-47	51	1	08.6000.4.005	3-13	58	2
01.1125.0.000	3-5	25*	1*	04.9024.0.650	3-47	43	1	08.6000.4.005	3-25	20**	1
01.1382.0.000	3-15	6	1	04.9024.0.900	3-39	9	(1)	08.6000.4.005	3-59	11	1
01.1397.0.000	3-15	11	4	05.1322.0.000	3-59	7	1	08.6000.4.006	3-29	20	1
01.2084.0.000	3-5	10	1	06.2400.0.019	3-55	8	1	08.6000.4.006	3-31	15	2
01.2136.0.000	3-5	36**	1**	06.2400.0.023	3-55	7	1	08.6000.4.006	3-33	4	2
01.2193.0.000	3-3	2	1	06.8800.0.001	3-51	2	(1)	08.6000.4.010	3-9	1	2
01.2376.0.000	3-5	17	4	07.6045.0.009	3-11	19	2	08.6000.4.010	3-21	7	1
01.2386.0.000	3-7	3	1	07.6045.0.034	3-11	30	1	08.6000.4.012	3-7	7	1
01.2527.0.000	3-27	40**	1	07.6045.0.037	3-11	16	2	08.6000.4.012	3-23	18	2
01.2563.0.000	3-5	33**	2**	07.6045.0.037	3-25	9	1	08.6000.4.014	3-11	45	2
01.2563.0.000	3-61	12	(2)	07.6045.0.042	3-7	9	1	08.6000.4.014	3-15	25	2
01.3005.0.000	3-27	45**	1	07.6045.0.042	3-21	4	1	08.6000.4.014	3-19	8	2
01.3065.0.000	3-5	24*	1*	07.6045.0.046	3-5	29**	3**	08.6000.4.016	3-9	3	4
01.4474.0.000	3-5	37**	1**	07.6045.0.046	3-59	34***	(1)	08.6000.4.016	3-21	10	6
01.5174.0.000	3-5	16*	1*	07.6045.0.053	3-25	21	1	08.6000.4.025	3-11	32	2
01.5445.0.000	3-5	38**	1*	07.6045.0.054	3-29	11	1	08.6000.4.070	3-31	7	4
01.6038.0.000	3-27	43**	1	07.6321.0.001	3-23	10	1	08.6000.5.008	3-51	19*	(1)*
01.6551.0.000	3-3	7	1	07.6321.0.025	3-13	50	2	08.6000.5.010	3-27	48**	2
01.6551.0.000	3-21	17	1	07.6321.0.025	3-19	16	2	08.6000.5.012	3-5	7	1
01.7447.1.000	3-3	5	1	07.6321.0.029	3-19	13	(2)	08.6000.5.012	3-57	1	2
01.7447.1.000	3-21	15	1	07.6321.0.030	3-13	61	(1)	08.6000.5.016	3-3	37	1
01.7804.0.000	3-3	18	1	07.6440.0.018	3-11	41	2	08.6000.5.016	3-21	3	1
01.7805.0.000	3-3	23	1	07.6440.0.028	3-11	23	2	08.6000.5.016	3-25	3	8
01.7805.0.000	3-29	37	2	07.6440.0.028	3-19	18	2	08.6000.5.016	3-29	26	3
01.7806.0.000	3-25	18	2	07.6440.0.033	3-11	8	2	08.6000.5.020	3-11	15	2
01.7809.0.000	3-3	17	1	07.6440.0.036	3-15	21	3	08.6000.5.022	3-5	5	4
02.0750.2.100	3-59	44*	—	07.6440.0.037	3-23	4	2	08.6000.6.008	3-5	27*	2**
02.0750.2.109	3-59	45*	—	07.6440.0.040	3-9	10	1	08.6000.6.008	3-5	27**	1**
02.0750.2.110	3-3	32	1	07.6440.0.041	3-11	11	1	08.6000.6.012	3-5	28**	1**
02.0750.2.110	3-59	6	10	07.6440.0.045	3-23	23	1	08.6000.6.016	3-3	22	2
03.5524.0.032	3-61	1	1	07.6440.0.046	3-27	47**	1	08.6000.6.016	3-29	31	2
04.1416.0.003	3-35	9	(1)	07.6440.0.050	3-11	18	1	08.6000.6.025	3-3	31	1
04.1416.0.003	3-37	9	(1)	07.6440.0.051	3-25	10	1	08.6000.6.025	3-19	1	1
04.1416.0.003	3-39	10	(1)	07.6600.0.004	3-55	3	1	08.6000.6.025	3-25	29	2
04.1416.0.003	3-41	9	(1)	08.6000.3.006	3-21	29	1	08.6000.6.025	3-61	2	(2)
04.9000.0.125	3-39	38	(1)	08.6000.3.006	3-29	15	1	08.6000.6.030	3-3	15	(1)
04.9000.0.225	3-39	37	(1)	08.6000.3.006	3-33	11	1	08.6000.8.025	3-25	7	2
04.9000.0.345	3-39	47	((1))	08.6000.3.010	3-11	38	1	08.6000.8.030	3-41	2	(4)
04.9000.2.123	3-35	15	1	08.6000.3.010	3-15	17	1	08.6000.8.040	3-25	12	2
04.9000.2.123	3-37	15	1	08.6000.3.010	3-19	6	1	08.6012.4.010	3-17	11	1
04.9000.2.123	3-41	15	1	08.6000.3.010	3-27	41**	2	08.6012.4.010	3-39	23	((1))
04.9024.0.001	3-39	1	1	08.6000.3.016	3-31	9	4	08.6032.4.008	3-55	5	1
04.9024.0.002	3-39	21	(1)	08.6000.3.040	3-31	8	1	08.6032.4.010	3-43	52	(6)

INDEX

PART NUMBER	PAGE	DET	QTY	PART NUMBER	PAGE	DET	QTY	PART NUMBER	PAGE	DET	QTY
08.6032.4.010	3-47	52	(6)	08.6400.4.004	3-15	1	2	08.6702.4.000	3-47	4	8
08.6100.3.008	3-19	5	2	08.6400.4.004	3-19	27	1	08.6702.8.000	3-35	21	(4)
08.6100.3.008	3-29	21	1	08.6400.4.004	3-21	26	1	08.6702.8.000	3-37	21	(4)
08.6100.3.016	3-25	37	1	08.6400.4.005	3-9	15	1	08.6702.8.000	3-39	42	(4)
08.6100.3.030	3-11	1	2	08.6400.4.005	3-11	28	6	08.6702.8.000	3-41	21	(4)
08.6100.4.006	3-9	14	1	08.6400.4.005	3-19	20	1	08.6702.8.000	3-51	10	(2)
08.6100.4.006	3-29	8	2	08.6400.4.012	3-5	21	1	08.6702.8.000	3-63	2	16
08.6100.4.010	3-43	36	4	08.6400.5.005	3-3	4	1	08.6710.0.300	3-41	33	(4)
08.6100.4.010	3-47	36	4	08.6400.5.005	3-5	18	1	08.6710.5.000	3-13	52	2
08.6100.4.012	3-51	8	(4)	08.6400.5.005	3-11	33	1	08.6710.5.000	3-15	23	2
08.6100.4.014	3-43	49	1	08.6400.5.005	3-25	27	2	08.6710.6.000	3-21	1	1
08.6100.4.014	3-47	49	1	08.6400.5.005	3-29	12	2	08.6733.3.000	3-11	24	2
08.6100.5.010	3-23	8	1	08.6400.5.008	3-25	28	2	08.6742.8.000	3-35	11	(4)
08.6100.5.012	3-5	14	2	08.6400.5.010	3-25	17	1	08.6742.8.000	3-37	11	(4)
08.6100.5.012	3-17	2	5	08.6400.5.010	3-29	13	2	08.6742.8.000	3-41	11	(4)
08.6100.5.012	3-17	02*	2*	08.6532.8.055	3-35	19	(4)	08.6752.8.000	3-35	22	(4)
08.6100.5.016	3-31	1	7	08.6532.8.055	3-37	19	(4)	08.6752.8.000	3-37	22	(4)
08.6100.5.020	3-15	4	2	08.6532.8.055	3-41	19	(4)	08.6752.8.000	3-41	22	(4)
08.6100.5.020	3-17	7	1	08.6652.3.016	3-39	14	(2)	08.6800.4.000	3-11	43	2
08.6100.5.020	3-25	26	3	08.6662.3.006	3-57	14	2	08.6800.4.000	3-15	26	2
08.6100.6.035	3-29	17	1	08.6663.5.025	3-35	13	10	08.6800.4.000	3-21	19	2
08.6100.8.012	3-41	26	(6)	08.6663.5.025	3-37	13	10	08.6800.4.000	3-61	8	(2)
08.6100.8.020	3-41	18	(4)	08.6663.5.025	3-39	20	(11)	08.6802.4.000	3-43	40	4
08.6102.3.008	3-43	17	2	08.6663.5.025	3-41	13	10	08.6802.4.000	3-47	40	4
08.6102.3.008	3-47	17	2	08.6663.5.025	3-55	6	2	08.6802.6.000	3-39	32	((1))
08.6120.3.008	3-29	3	7	08.6676.3.020	3-39	8	(17)	08.6802.8.000	3-39	16	(4)+((4))
08.6200.4.006	3-61	9	(1)	08.6683.4.007	3-51	15	1	08.6802.8.000	3-51	9	(2)
08.6200.4.008	3-31	17	2	08.6683.4.007	3-57	16	2	08.6802.8.000	3-63	3	16
08.6200.4.016	3-21	22	2	08.6700.3.000	3-25	38	1	08.6832.0.000	3-39	29	((8+2+2))
08.6200.5.008	3-25	5	1	08.6700.4.000	3-5	22	1	08.6832.4.000	3-17	12	1
08.6200.5.012	3-17	3	6	08.6700.4.000	3-7	11	1	08.6832.4.000	3-39	25	((1))
08.6200.5.014	3-17	07*	1*	08.6700.5.000	3-17	9	1	08.6832.4.000	3-55	4	1
08.6200.5.020	3-17	16	1	08.6700.5.000	3-19	24	2	08.6832.5.000	3-57	2	2
08.6215.4.006	3-45	62	2	08.6700.5.000	3-23	15	1	08.6832.6.000	3-39	30	((1))
08.6300.0.070	3-41	35	(2)	08.6700.5.000	3-25	34	3	08.6832.8.000	3-39	39	((2)+(2))
08.6312.0.020	3-39	27	((12))	08.6700.5.000	3-57	6	2	08.6850.0.000	3-41	34	(4)
08.6312.6.020	3-39	33	((1))	08.6700.6.000	3-39	45	(3)	08.6850.3.000	3-21	27	1
08.6312.8.020	3-39	40	((4)+(4)+4))	08.6700.6.000	3-39	46	(1)	08.6850.4.000	3-5	34**	1**
08.6312.8.020	3-51	5	(2)	08.6700.6.000	3-41	31	(1)	08.6850.4.000	3-7	13	1
08.6312.8.025	3-39	26	((4))	08.6700.8.000	3-13	57	1	08.6850.4.000	3-21	18	2
08.6312.8.060	3-63	1	16	08.6700.8.000	3-15	33	1	08.6850.4.000	3-29	19	1
08.6400.3.004	3-29	23	1	08.6700.8.000	3-35	2	(4)	08.6850.4.000	3-59	10	1
08.6400.3.005	3-3	12	4	08.6700.8.000	3-37	2	(4)	08.6850.5.000	3-23	16	1
08.6400.4.004	3-3	21	2 (2	08.6700.8.000	3-39	2	(8)	08.6850.5.000	3-25	2	7
08.6400.4.004	3-5	8	2	08.6702.4.000	3-43	4	8	08.6850.5.000	3-25	02**	2

Revised: 1/2025
E-mail: info@amfreece-cars.cz

INDEX

PART NUMBER	PAGE	DET	QTY	PART NUMBER	PAGE	DET	QTY	PART NUMBER	PAGE	DET	QTY
08.6850.5.000	3-29	25	2	12.0008.3.608	3-59	41	1	12.0008.4.679	3-47	25*	(1)
08.6850.5.000	3-31	4	4	12.0008.3.623	3-57	24	1	12.0008.4.710	3-43	24	1
08.6850.5.000	3-57	5	2	12.0008.3.659	3-57	3	1	12.0008.4.710	3-47	24	1
08.6850.6.000	3-25	30	2	12.0008.3.753	3-57	4	1	12.0008.4.713	3-43	38	1
08.6850.8.000	3-13	56	1	12.0008.3.828	3-57	13	3	12.0008.4.713	3-47	38	1
08.6850.8.000	3-15	32	1	12.0008.3.829	3-57	9	1	12.0008.4.762	3-43	50	2
08.6852.3.000	3-27	42**	2	12.0008.3.830	3-57	15	1	12.0008.4.777	3-39	6	(1)
08.6852.4.000	3-39	24	((1))	12.0008.3.831	3-57	21	1	12.0008.4.777	3-47	21	1
08.6852.4.000	3-43	41	4	12.0008.3.832	3-57	20	1	12.0008.4.833	3-53	12	1
08.6852.4.000	3-51	14	1	12.0008.3.833	3-51	17	1	12.0008.4.835	3-43	46	1
08.6852.4.000	3-47	41	4	12.0008.4.050	3-53	8	1	12.0008.4.835	3-47	46	1
08.6852.5.000	3-39	19	(11)	12.0008.4.052	3-17	10	1	12.0008.4.861	3-43	45	1
08.6852.6.000	3-39	31	((1))	12.0008.4.052	3-39	22	((1))	12.0008.4.861	3-47	45	1
08.6852.8.000	3-35	20	(4)	12.0008.4.058	3-39	13	(1)	12.0008.4.863	3-43	44	1
08.6852.8.000	3-37	20	(4)	12.0008.4.058	3-57	11	3	12.0008.4.863	3-47	44	1
08.6852.8.000	3-39	17	(4)+(4)+((4))	12.0008.4.100	3-17	17	1	12.0008.6.001	3-59	8	1
08.6852.8.000	3-41	20	(4)	12.0008.4.155	3-45	58	1	12.0008.6.100	3-59	16	1
08.6852.8.000	3-51	6	(4)	12.0008.4.155	3-49	55	1	12.0008.6.101	3-59	14	1
08.6852.8.000	3-63	4	16	12.0008.4.197	3-17	8	1	12.0008.6.102	3-59	13	1
08.6882.0.000	3-39	28	((12))	12.0008.4.207	3-43	37	7	12.0008.6.105	3-59	17	1
08.6887.5.000	3-9	11	1	12.0008.4.207	3-47	37	7	12.0008.6.109	3-59	12	1
12.0008.3.023	3-25	13	1	12.0008.4.214	3-51	16	(3)	12.0008.6.112	3-59	15	1
12.0008.3.023	3-33	14	1	12.0008.4.215	3-47	22	4	12.0008.6.527	3-63	5	2
12.0008.3.023	3-39	12	(1)	12.0008.4.231	3-43	39	3	12.0008.6.528	3-63	6	2
12.0008.3.023	3-57	12	3	12.0008.4.231	3-47	39	3	12.0008.6.800	3-19	23	1
12.0008.3.081	3-59	43*	—	12.0008.4.279	3-51	18*	(1)*	12.0008.6.801	3-35	6	(4)
12.0008.3.251	3-59	19	1	12.0008.4.280	3-51	13	1	12.0008.6.801	3-37	6	(4)
12.0008.3.409	3-57	26	1	12.0008.4.280	3-57	18	2	12.0008.6.801	3-39	5	(4)
12.0008.3.409	3-57	28	2	12.0008.4.296	3-51	3	(1)	12.0008.6.807	3-41	25	(2)
12.0008.3.411	3-57	29	4	12.0008.4.306	3-51	04*	(1)*	12.0008.6.813	3-39	34	((3))
12.0008.3.412	3-57	30	1	12.0008.4.366	3-43	42	1	12.0008.6.900	3-35	5	(1)
12.0008.3.413	3-57	25	1	12.0008.4.366	3-55	9	1	12.0008.6.900	3-37	5	(1)
12.0008.3.418	3-57	17	1	12.0008.4.366	3-47	42	1	12.0008.6.900	3-41	5	(1)
12.0008.3.420	3-57	7	1	12.0008.4.403	3-43	26**	1**	12.0008.6.901	3-35	16	(1)
12.0008.3.430	3-57	23	1	12.0008.4.403	3-47	26*	1	12.0008.6.901	3-37	16	(1)
12.0008.3.433	3-57	27	1	12.0008.4.472	3-47	50	2	12.0008.6.901	3-39	44	(1)
12.0008.3.463	3-59	46*	—	12.0008.4.563	3-43	15	1	12.0008.6.901	3-41	16	(1)
12.0008.3.464	3-59	18	—	12.0008.4.563	3-47	15	1	12.0008.6.964	3-39	41	((4))
12.0008.3.465	3-59	22	—	12.0008.4.570	3-43	14	2	12.0008.6.965	3-39	43	(1)
12.0008.3.466	3-59	20	—	12.0008.4.570	3-47	14	2	12.0010.4,071	3-53	5	1
12.0008.3.467	3-59	21	—	12.0008.4.598	3-25	35	1	12.0010.4.013	3-3	38	1
12.0008.3.484	3-57	8	1	12.0008.4.632	3-17	18*	1*	12.0010.4.067	3-53	7	1
12.0008.3.605	3-57	19	1	12.0008.4.664	3-53	11	1	12.0010.4.071	3-53	13	1
12.0008.3.606	3-57	22	1	12.0008.4.665	3-53	10	1	12.0010.4.078	3-53	9	1
12.0008.3.607	3-59	40*	—	12.0008.4.679	3-43	25**	1)**	12.0010.4.094	3-49	59	3

INDEX

PART NUMBER	PAGE	DET	QTY	PART NUMBER	PAGE	DET	QTY	PART NUMBER	PAGE	DET	QTY
12.1010.2.003	3-25	33	1	17.0095.1.272	3-41	4	(8)	22.0063.0.000	3-19	4	1
12.1011.0.001	3-25	36	1	17.0095.1.329	3-33	7	1	22.0064.0.000	3-15	16	1
12.1016.0.000	3-39	35	((2))	20.0092.0.004	3-7	2	1	22.0064.0.000	3-19	14	2
12.1016.1.000	3-35	8	(6)	20.0093.2.004	3-7	1	1	22.0069.0.000	3-19	21	1
12.1016.1.000	3-37	8	(6)	20.0093.2.004	3-59	1	1	22.0091.0.000	3-21	24	1
12.1016.1.000	3-39	11	(2)	20.0094.0.000	3-15	7	1	22.0096.0.000	3-29	7	1
12.1016.1.000	3-41	8	(6)	20.0094.0.000	3-59	2	1	22.0097.0.000	3-23	12	1
12.1040.1.009	3-41	29	(1)	20.0111.0.000	3-15	8	1	22.0100.0.000	3-11	34	4
12.1045.2.001	3-3	29	1	20.0112.0.000	3-15	10	1	22.0100.0.000	3-15	20	3
12.1045.2.001	3-29	36	1	20.0649.1.042	3-59	47*	2	22.0100.0.000	3-19	11	4
12.1045.3.001	3-7	4	1	20.0650.0.240	3-59	30**	—	22.0104.0.000	3-33	6	1
12.2010.1.002	3-15	14	2	20.0650.0.340	3-59	29**	—	22.0105.0.000	3-15	29	1
12.2050.0.003	3-3	20	1	20.0650.0.606	3-5	31**	1**	22.0106.0.000	3-23	21	2
12.2050.0.005	3-29	30	1	20.0650.0.640	3-5	13*	1*	22.0107.0.000	3-33	13	1
12.4030.0.002	3-29	27	1	20.0650.1.706	3-59	33***	(1)	22.0108.0.000	3-33	8	1
12.5050.2.009	3-25	15	1	20.0681.0.000	3-27	44**	1	22.0110.0.000	3-13	54	1
12.8000.0.016	3-17	6	1	20.0767.1.002	3-59	28**	—	22.0110.0.000	3-19	9	1
12.8000.0.016	3-57	10	1	20.0767.1.003	3-59	27**	—	22.0114.0.000	3-11	2	1
12.8000.0.040	3-43	48	1	20.0767.1.022	3-5	23*	1*	22.0120.0.000	3-33	5	1
12.8000.0.040	3-47	48	1	22.0006.0.000	3-29	34	1	22.0121.0.000	3-11	3	1
12.8000.0.041	3-43	47	1	22.0008.0.000	3-19	2	1	22.0137.0.000	3-23	9	2
12.8000.0.041	3-47	47	1	22.0009.0.000	3-19	12	(1)	22.0153.0.000	3-29	38	2
12.8000.0.044	3-43	54	1	22.0009.0.050	3-19	28	1	22.0159.0.000	3-5	20	1
12.8000.0.047	3-43	16	1	22.0020.0.000	3-19	22	1	22.0161.0.000	3-21	23	1
12.8000.0.047	3-47	16	1	22.0021.0.000	3-13	47	1	22.0173.0.000	3-5	2	2
12.8000.0.065	3-47	54	1	22.0021.0.000	3-15	27	1	22.0175.0.000	3-3	27	1
17.0011.1.149	3-11	13	4	22.0022.0.000	3-13	55	1	22.0177.0.000	3-3	35	2
17.0011.1.149	3-29	33	6	22.0022.0.000	3-15	31	1	22.0178.0.000	3-3	34	1
17.0019.0.441	3-35	3	(4)	22.0023.0.000	3-15	28	1	22.0179.0.000	3-5	35**	1**
17.0019.0.441	3-37	3	(4)	22.0024.0.000	3-15	22	1	22.0179.0.000	3-61	11	(1)
17.0019.0.441	3-39	3	(4)	22.0026.0.000	3-11	40	1	22.0182.0.000	3-23	11	2
17.0019.0.441	3-41	3	(4)	22.0027.0.000	3-19	19	1	22.0183.0.000	3-11	39	1
17.0019.0.517	3-11	37	1	22.0028.0.000	3-19	17	2	22.0183.0.000	3-15	18	1
17.0019.2.057	3-11	25	1	22.0029.0.000	3-19	15	2	22.0183.0.000	3-19	7	1
17.0027.1.799	3-33	9	1	22.0030.0.000	3-19	26	1	22.0184.0.000	3-11	21	3
17.0081.6.225	3-39	36	((1))	22.0031.0.000	3-13	51	2	22.0186.0.000	3-11	27	1
17.0082.6.000	3-33	10	1	22.0031.0.000	3-15	15	2	22.0195.0.000	3-3	1	1
17.0082.8.082	3-25	23	1	22.0032.0.000	3-13	49	2	22.0208.0.000	3-11	26	1
17.0094.0.200	3-35	14	(4)	22.0046.0.000	3-21	16	1	22.0209.0.000	3-59	3	1
17.0094.0.200	3-37	14	(4)	22.0049.0.000	3-11	31	1	22.0213.0.000	3-59	9	1
17.0094.0.200	3-41	14	(4)	22.0054.0.000	3-25	6	1	22.0214.0.000	3-19	10	1
17.0094.5.310	3-33	12	1	22.0057.0.000	3-31	14	1	22.0219.0.000	3-35	17	1
17.0095.1.272	3-35	4	(4)	22.0058.0.000	3-25	8	1	22.0219.0.000	3-37	17	1
17.0095.1.272	3-37	4	(4)	22.0061.0.000	3-11	7	1	22.0219.0.000	3-39	48	1
17.0095.1.272	3-39	4	(4)	22.0062.0.000	3-25	11	1	22.0219.0.000	3-41	17	1

Revised: 1/2025
E-mail: info@amfreece-cars.cz

INDEX

PART NUMBER	PAGE	DET	QTY	PART NUMBER	PAGE	DET	QTY	PART NUMBER	PAGE	DET	QTY
22.0228.0.000	3-11	12	1	22.2633.0.000	3-23	19	1	24.0036.0.000	3-5	3	1
22.0229.0.000	3-33	3	2	22.2651.0.000	3-9	9	1	24.0037.0.000	3-21	2	1
22.0230.0.000	3-3	8	2	22.2652.0.000	3-9	4	1	24.0038.0.000	3-17	5	1
22.0232.0.000	3-13	53	1	22.2653.0.000	3-9	2	1	24.0039.1.000	3-21	13	1
22.0232.0.000	3-15	24	1	22.2655.0.000	3-9	12	1	24.0044.0.000	3-25	19**	1
22.0233.0.000	3-15	30	1	22.2656.0.000	3-9	7	1	24.0048.0.000	3-3	26	1
22.0239.0.000	3-3	9	2	22.2657.0.000	3-9	6	1	24.0049.0.000	3-11	14	2
22.0300.0.000	3-29	40	1	22.2664.0.000	3-9	17	1	24.0050.0.000	3-57	31	1
22.0305.0.000	3-11	35	1	22.3003.0.000	3-23	24	1	24.0051.0.066	3-29	16	1
22.0309.0.000	3-11	20	1)	22.3034.0.000	3-5	15	1	24.0055.0.000	3-19	3	1
22.0309.0.050	3-13	59	1	22.3206.0.000	3-23	14	1	24.0059.9.017	3-43	53	1
22.0312.0.000	3-11	6	1	22.3216.0.000	3-23	17	1	24.0059.9.017	3-47	53	1
22.0313.0.000	3-11	17	1)	22.3217.0.000	3-5	26*	1*	24.0059.9.064	3-43	32	1
22.0315.0.000	3-11	22	1	22.3219.0.000	3-29	18	1	24.0059.9.064	3-47	32	1
22.0320.0.000	3-11	36	1	22.3250.0.000	3-59	35***	(1)	24.0059.9.065	3-35	12	1
22.0325.0.000	3-11	10	1	22.3251.0.000	3-5	32**	1**	24.0059.9.065	3-37	12	1
22.0336.0.000	3-11	44	1	22.3251.0.000	3-61	5	(1)	24.0059.9.065	3-41	12	1
22.0353.0.000	3-13	48	3	22.3252.0.000	3-27	46**	1	24.0059.9.069	3-43	28	1
22.0354.0.000	3-11	4	1	22.3255.0.000	3-27	39**	1	24.0059.9.069	3-47	28	1
22.0370.0.000	3-11	46	1	22.3256.0.000	3-5	26**	1**	24.0061.0.000	3-21	28	1
22.0400.0.000	3-9	16	1	22.6002.0.000	3-25	25	1	24.0062.0.000	3-21	21	1
22.0405.2.000	3-9	8	1	22.6101.2.000	3-29	4	1	24.0063.0.000	3-21	25	1
22.0408.0.000	3-29	9	1	22.8400.0.000	3-29	39	1	24.0066.0.000	3-15	13	2
22.0520.0.000	3-3	6	1	23.2106.0.000	3-15	9	1	24.0067.0.000	3-31	3	1
22.0525.0.000	3-3	16	(1)	23.2107.0.000	3-15	12	1	24.0068.0.000	3-31	2	1
22.0525.0.050	3-3	24	1	24.0001.0.000	3-3	33	1	24.0069.9.002	3-43	35	1
22.0530.0.000	3-3	10	1	24.0002.0.000	3-3	28	1	24.0069.9.003	3-51	4	(1)
22.0535.0.100	3-3	30	1	24.0002.0.000	3-29	32	1	24.0069.9.004	3-43	23	1
22.0540.0.000	3-3	14	1	24.0003.0.000	3-7	6	1	24.0069.9.004	3-47	23	1
22.0541.0.000	3-3	13	1	24.0004.0.000	3-7	8	1	24.0069.9.006	3-43	30	1
22.0542.0.000	3-3	11	1	24.0005.0.000	3-7	10	1	24.0069.9.006	3-47	30	1
22.0545.0.000	3-3	25	1	24.0006.0.000	3-7	14	1	24.0069.9.008	3-43	33	1
22.0545.0.000	3-29	41	1	24.0009.0.000	3-21	9	1	24.0069.9.009	3-51	1	1
22.1010.0.000	3-17	4	2	24.0010.0.000	3-21	8	1	24.0069.9.023	3-43	19	1
22.1415.0.050	3-21	11	1	24.0011.0.000	3-21	5	1	24.0069.9.023	3-47	19	1
22.1422.0.000	3-25	22	1	24.0014.0.000	3-21	6	1	24.0069.9.027	3-43	29	1
22.1436.0.000	3-21	14	2	24.0016.0.000	3-25	32	1	24.0069.9.027	3-47	29	1
22.2410.0.000	3-15	3	1	24.0018.0.000	3-29	14	1	24.0069.9.038	3-51	01*	1*
22.2425.0.050	3-15	19	1	24.0019.0.000	3-29	29	1	24.0069.9.040	3-39	7	(1)
22.2440.0.000	3-15	5	2	24.0020.0.000	3-29	24	1	24.0069.9.042	3-47	33	1
22.2442.0.000	3-15	2	2	24.0024.0.000	3-59	5	1	24.0069.9.043	3-47	35	1
22.2607.0.000	3-23	1	1	24.0027.0.000	3-29	42	1	24.0079.0.000	3-41	23	(1)
22.2610.0.000	3-23	13	1	24.0030.0.000	3-59	4	1	24.0080.0.000	3-7	5	1
22.2627.0.000	3-23	2	2	24.0033.0.000	3-19	25	1	24.0081.0.000	3-41	6	(6)
22.2631.0.000	3-23	20	1	24.0035.0.000	3-5	6	1	24.0082.0.000	3-41	7	0

INDEX

PART NUMBER	PAGE	DET	QTY	PART NUMBER	PAGE	DET	QTY	PART NUMBER	PAGE	DET	QTY
24.0084.0.000	3-41	28	(8)	24.3205.0.001	3-5	11	1				
24.0086.0.000	3-41	24	(1)	24.3205.0.002	3-5	1	1				
24.0087.0.000	3-41	30	(2)	24.3206.0.000	3-59	31*	—				
24.0089.0.000	3-41	32	(1)	24.3207.0.000	3-5	30**	1**				
24.0097.0.000	3-51	7	(1)	24.3208.0.000	3-59	48**	1				
24.0100.0.000	3-3	36	1	24.3209.0.000	3-5	19	1				
24.0106.1.000	3-25	31	1	24.3210.0.000	3-5	9	1				
24.0108.0.000	3-25	16	1	24.3215.0.000	3-61	7	(2)				
24.0111.0.000	3-17	1	1	24.3216.0.000	3-61	13	(1)				
24.0112.0.000	3-31	11	1	24.3217.0.000	3-61	6	(1)				
24.0119.0.050	3-25	24	1	24.3218.0.000	3-61	3	(1)				
24.0125.0.000	3-5	12	1	24.3219.0.000	3-61	4	(1)				
24.0126.0.000	3-11	5	1	24.3306.0.000	3-61	10	(1)				
24.0127.0.000	3-11	42	1	24.6000.5.000	3-25	4	1				
24.0138.0.000	3-43	43	1	24.6001.7.000	3-31	10	1				
24.0139.0.000	3-33	2	1	24.6003.1.000	3-31	13	1				
24.0140.0.000	3-13	60	1	24.6004.7.000	3-31	6	1				
24.0141.0.000	3-33	1	1	24.6005.1.002	3-17	13	1				
24.0142.0.000	3-35	10	(1)	24.6100.0.000	3-29	10	1				
24.0142.0.050	3-35	1	1	24.8001.2.001	3-53	6	1				
24.0145.1.000	3-57	32	1	24.8001.2.005	3-53	4	1				
24.0148.0.000	3-43	18	1	24.8001.2.023	3-55	2	1				
24.0148.0.000	3-47	18	1	24.9920.9.989	3-59	32***	—				
24.0149.0.000	3-37	10	(1)	70.4165.1.125	3-43	51	1				
24.0149.0.050	3-37	1	1								
24.0150.0.000	3-41	10	(1)								
24.0150.0.050	3-41	1	1								
24.0154.0.000	3-31	16	1								
24.0155.0.000	3-17	04*	2*								
24.0171.0.000	3-63	7	4								
24.0198.0.000	3-55	1	1								
24.0351.0.000	3-11	9	1								
24.0500.0.000	3-3	19	1								
24.0510.0.000	3-3	3	1								
24.0546.0.000	3-27	49	1								
24.1000.0.000	3-29	28	1								
24.1430.1.000	3-21	20	1								
24.2035.0.000	3-11	29	1								
24.2400.0.000	3-29	35	1								
24.2626.3.000	3-23	3	1								
24.2640.2.000	3-23	22	1								
24.2665.2.000	3-9	13	1								
24.3200.0.000	3-23	5	1								
24.3201.0.000	3-23	6	1								
24.3203.0.000	3-23	7	1								

Revised: 1/2025
E-mail: info@amfreece-cars.cz