AMF® REECE

Better Ideas, Better Made

MODEL DECO 3000 ATT

DECORATIVE STITCHING MACHINE

PARTS AND SERVICE MANUAL

MACHINE SERIAL No:

PART NUMBER 97.7000.3.000

04/2024

LIMITED WARRANTY ON NEW AMF REECE - CARS EQUIPMENT

Warranty provisions:

A ninety (90) day limited service labor warranty to correct defects in installation, workmanship, or material without charge for labor. This portion of the warranty applies to machines sold as “installed” only.

A one (1) year limited material warranty on major component parts to replace materials with defects. Any new part believed defective must be returned freight prepaid to AMF Reece - Cars for inspection. If, upon inspection, the part or material is determined to be defective, AMF Reece - Cars will replace it without charge to the customer for parts or material.

Service labor warranty period shall begin on the completed installation date. Material warranty shall begin on the date the equipment is shipped from AMF Reece - Cars.

Exclusions:

Excluded from both service labor warranty and material warranty are: (1) Consumable parts which would be normally considered replaceable in day-to-day operations. These include parts such as needles, knives, loopers and spreaders. (2) Normal adjustment and routine maintenance. This is the sole responsibility of the customer. (3) Cleaning and lubrication of equipment. (4) Parts found to be altered, broken or damaged due to neglect or improper installation or application. (5) Damage caused by the use of non-Genuine AMF Reece parts. (6) Shipping or delivery charges.

There is no service labor warranty for machines sold as “uninstalled”.

Equipment installed without the assistance of a certified technician (either an AMF Reece - Cars Employee, a Certified Contractor, or that of an Authorized Distributor) will have the limited material warranty only. Only the defective material will be covered. Any charges associated with the use of an AMF Reece - Cars Technician or that of a Distributor to replace the defective part will be the customer’s responsibility.

NO OTHER WARRANTY, EXPRESS OR IMPLIED, AS TO DESCRIPTION, QUALITY, MERCHANTABILITY AND FITNESS FOR A PARTICULAR PURPOSE, OR ANY OTHER MATTER IS GIVEN BY SELLER OR SELLER’S AGENT IN CONNECTION HEREWITH. UNDER NO CIRCUMSTANCES SHALL SELLER OR SELLER’S AGENT BE LIABLE FOR LOSS OF PROFITS OR ANY OTHER DIRECT OR INDIRECT COSTS, EXPENSES, LOSSES OR DAMAGES ARISING OUT OF DEFECTS IN OR FAILURE OF THE EQUIPMENT OR ANY PART THEREOF.

WHAT TO DO IF THERE IS A QUESTION REGARDING WARRANTY

If a machine is purchased through an authorized AMF Reece - Cars distributor, warranty questions should be first directed to that distributor. However, the satisfaction and goodwill of our customers are of primary concern to AMF Reece - Cars. In the event that a warranty matter is not handled to your satisfaction, please contact AMF Reece - Cars office:

Prostejov, Czech Republic
Phone: (+420) 725-088-560
E-mail: info@amfreece-cars.cz

Warranty Registration Card

((Please E-mail immediately after installation)

<u>Note: All Warranty Claims void, unless Registration Card on file at AMF Reece - Cars HQ</u>

Machine model number:
(Deco 3000, S-4000, S-4002, EBS Mark II, etc.)

Manufacturer‘s serial or production number:

Installation Site Information:

Customer‘s Name:

Customer‘s Mailing Address:

Customer‘s Telephone Number:

Supervising Mechanic‘s or Technician‘s Name:

Signature of Supervising Technician:

AMF Reece - Cars Technician‘s Name:

AMF Reece - Cars Technician‘s Signature:

Type of garment produced at this location?

Average Daily Production Expected from this machine?
(number of buttonholes, jackets sewn, pants produced, buttons sewn, etc)

Any special requirements required at this location?

What other AMF Reece Machines are at this location?

How can we serve you better?

TABLE OF CONTENTS

A - INTRODUCTION
1. MACHINE DECO 3000 ATT BASIC FUNCTIONS AND ADVANTAGES 1
2. BASIC INFORMATIONS 2
3. SPECIFICATIONS 3
4. SAFETY LABELS AND DEVICE 4
5. GENERAL MACHINE PARTS DESCRIPTION 5
6. INFORMATION NECESSARY FOR A CLAIM 6
7. INSTRUCTIONS FOR THE SECURITY OF THE OPERATOR AND MAINTENANCE 6
8. SPECIAL ACCESSORIES 8

B - MACHINE INSTALLATION
1. CONTENT OF THE SHIPPING BOX 9
2. TABLE INSTALLATION 9
3. CONNECTION OF THE MACHINE TO THE POWER SUPPLY 9

C - MACHINE CONTROLS
1. POWER UP 10
2. CONTROL PANEL DESCRIPTION 11
3. SEWING SPEED ADJUSTMENT 11
4. TOP STITCH AND BOTTOM STITCH LENGTH ADJUSTMENT 12
5. SETTING THE STITCH STYLE 14
6. THREAD TRIM - LENGTH ADJUSTMENT 16
7. COUNTER 17
8. CONDENSED STITCH - DENSE 18
9. TIE - OFF / BACK TACK 19
10. LONG THREAD SEWING 20
11. STARTING SEWING 21
12. ERROR MESSAGES 22
13. SWITCH OFF THE MACHINE 23

D - CORRECT MACHINE APPLICATION
1. NEEDLE INSTALLATION 24
2. THREADING 25

E - STANDARD MACHINE ADJUSTMENT
1. ADJUSTMENT 26
2. TIMING 27
3. ADJUSTMENT OF NEEDLE BARS 28
3.1. Adjust the upper needle bar 28
3.2. Adjust the needle release 28
4. ADJUSTMENT AND TIMING OF GRIPPER FINGERS 30
4.1. Align to the needle 30
4.2. Adjust finger closing 30
4.3. Timing the gripper fingers 30
5. ADJUSTING LOOP SUPPORT, THREAD GUIDE, AND SEPARATOR GUIDE 32
5.1. Adjust the loop support 32
5.2. Adjust the thread guide 32
5.3. Adjust the separator guide 32
6. ADJUSTMENT AND TIMING OF THE THREAD LIFTER 34
6.1. Adjust lifter hook 34
7. TIMING THE THREAD BRUSH 34
7.1. Thread brush opening 34

Released: 04/2024
E-mail: info@amfreece-cars.cz

TABLE OF CONTENTS

8. ADJUSTMENT AND TIMING OF THREAD TENSION FINGER 36
8.1. Set forward position 36
8.2. Timing the tension finger 36
8.3. Clearance from the needle 36
8.4. Adjust the stitch tension 36
9. ADJUSTMENT AND TIMING OF MATERIAL FEED 38
9.1. Position the timing of material feed 38
9.2. Adjust feed dog angle 38
9.3. Adjust feed dog height 38
9.4. Adjust feed dog timing 38
10. TIMING THE FOLLOWER FOOT 40
10.1. Adjust the follower foot separation 40
11. ADJUSTMENT AND TIMING, LEFT LOOPER AND RIGHT LOOPER 42
11.1. Left looper dwell position 42
11.2. Left looper clearance 42
11.3. Left looper height 42
11.4. Right looper dwell 42
11.5. Looper timing 42
12. ADJUSTMENT AND TIMING OF LOWER LOOPER 44
12.1. Timing the drive gibs 44
12.2. Timing the lower looper 44
12.3. Align the lower hook tip 44
13. SETTING - UP PROCEDURE FOR FEED DOG SENSOR AND FLAG 46
14. BELT TENSION ADJUSTMENTS 46

F - MACHINE MAINTENANCE
1. CLEANING AND MAINTENANCE OF THE MACHINE 48
2. MAINTENANCE LIST 49
3. MACHINE DISPOSAL 51

G - DOCUMENTATION
1. ELECTRICAL DIAGRAM 52

A - INTRODUCTION

1. MACHINE DECO 3000 BASIC FUNCTIONS AND ADVANTAGES

1. Decorative machine Deco 3000 ATT was created at AMF Reece company, so that the machine maximally imitate the hand stitching and allows to select and create the stitch style.
   The secret of this machine is principally at the special transitivity needle system. Double pointed needle with an eye at the mid point passes through the material brings the thread from one needle bar to the other exactly as a seamstress. This machine develops the stitch with a perfect strength, higher quality and higher productivity than is the hand stitching.

2. This machine has the Microprocessor with the graphical display.
   Used operations in the program are easy to understand whereby symbols. It allows to the operator fast and easy setting up all needed parameters with out linguistic barriers.
   The adjustment of the sewing speed and stitch style are operations which can be made by one catch of screen.
   The other possibility of setting the parameters is to reverse of the Top stitch and Button stitch parameters by the Reverse button placed (on the right) on the plate.

3. The quality is assured on all types of fabrics by use the double pointed needle.
   This needle is passing through the material very lightly, does not intercept the fabric and leave far smallest hole after puncture than when the usual needle is used.

4. The Deco 3000 ATT machine sewing speed up to the 500 stitches per minute is ten times more productive than the hand stitching. The all stitch style parameters can be reversed at any sewing speed, which escalate the productivity and minimizes the thread waste.

5. The Motor precisely positioning the needle up to the home position is another advantage of this machine. The operator can with sureness start the sewing cycle from the beginning and also automatically situate the needle up when the threading is needed.

6. Application:

Edge stitching	- of jackets, overcoats, pocket flaps
Saddle stitching	- jackets overcoats ladies jackets, collars and cuffs on shirts and blouses
Decorative stitching	- all outwear garments, including leathewear

A - INTRODUCTION

2. BASIC INFORMATIONS

The sewing machine Deco 3000 ATT is designed and produced to be very reliable. Important design goals have been to provide a safe machine that is simple and inexpensive to maintain.

Special electronic and mechanical safety devices protect the operator and the machine. There is a special power lock out switch that permits the machine to be locked in the off position, so that it cannot be cycled accidentally. The drive cover is equipped with a safety switch that will not allow machine operation while the cover is open. There is an emergency off switch. There are safety - warning labels on the machine in all areas that require special care. These must not be removed. If they are lost replace them immediately.
Never remove safety mechanisms or labels. Said precautions can not include all safety devices, so it is necessary for the operator before the machine is used, to read and understand to this manual. It will eliminate the mistakes during the installation, and during the operation as well. Do not start the machine if you did not read all instructions delivered with the machine and if you do not understand all functions and procedures.
In this manual are incorporated three category of safety instructions:

DANGER! Possible loss of life.

WARNING! Possible serious injury or machine damage.

NOTICE! Possible injury or machine damage.

It is recommend that service workers from AMF Reece oversee the installation and initial training of your mechanics and operators.

The most effective safety precaution is a well-managed safety program. Be sure those who use this machine are properly trained. Never disable safety equipment.

Always wear safety goggles when operating or servicing the machine.

Released: 04/2024
E-mail: info@amfreece-cars.cz

A - INTRODUCTION

3. SPECIFICATIONS

Machine type	Deco 3000 ATT
Description	Electronic decorative machine Deco 3000 ATT or sewing ladies and man jackets
Stitch style	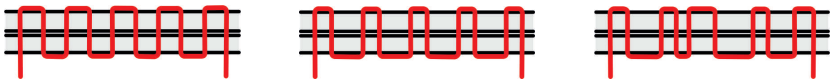
Machine Performance	150 to 500 turns per minute / from 75 to 250 stitches per minute
Sewing Speed	500 s.p.m.
Stitch Length	From 0,1 to 8 mm
Maximum Work Thickness	Maximally 7 mm
Recommended Thread Lenght	Cut thread from 400 — 1500 mm standard
	Cut thread lenght in advance from 400 — 1200 mm (waxed)
Technical Specifications for condensed stitch:	
Range for length of single stitch (Stitch Density)	5 to 30 Units
Maximum length for condensed stitch	300 Units
Note: 10 units displayed on the touch panel constitute approximately 1 mm which may vary practically depending on the type of fabric.	
Automatic Thread Cutting	✂
Recommended Thread Thickness	Synthetic thread
	Silcora waxed silk thread (Rice) Size A Lightweight material Size C medium, heavyweight material
	Other high quality threads may be used, but may result in some loss of quality after threads pressing the garment and sewing quality
Used Needle	AMF Reece 59 - 83 - 1032 BI / Pn. 00103238 /
	Size 36 Normal weight materials fine thread
	Size 38 Normal weight materials normal thread
	Size 49 Heavyweight materials
Lubrication	Manually (every day)
Operating Conditions	According to IEC 364 - 3, IEC 364 - 51 temperature from +5°C to 40°C, relativeair humidity from 30 to 80%
Motor	Asynchronous 3 stage motor 0,37 KW
Electrical Requirements	1 NPE ~ 50 Hz 230 V/TN/S: 1 NPE ~ 60 Hz 230 V/TN/S
Table Dimension	956 (L) x 630 (W) x 850
Machine Head Dimension	1118 mm (L) x 940 mm (W) x 1118 mm
Machine Head Weight	220 kg
Line Circuit Breaker	Maximally 16 A
Dimension Packed Weight	1168 mm (L) x 1041mm (W) x 1118 mm (H) 338 kg

A - INTRODUCTION

4. SAFETY LABELS AND DEVICE

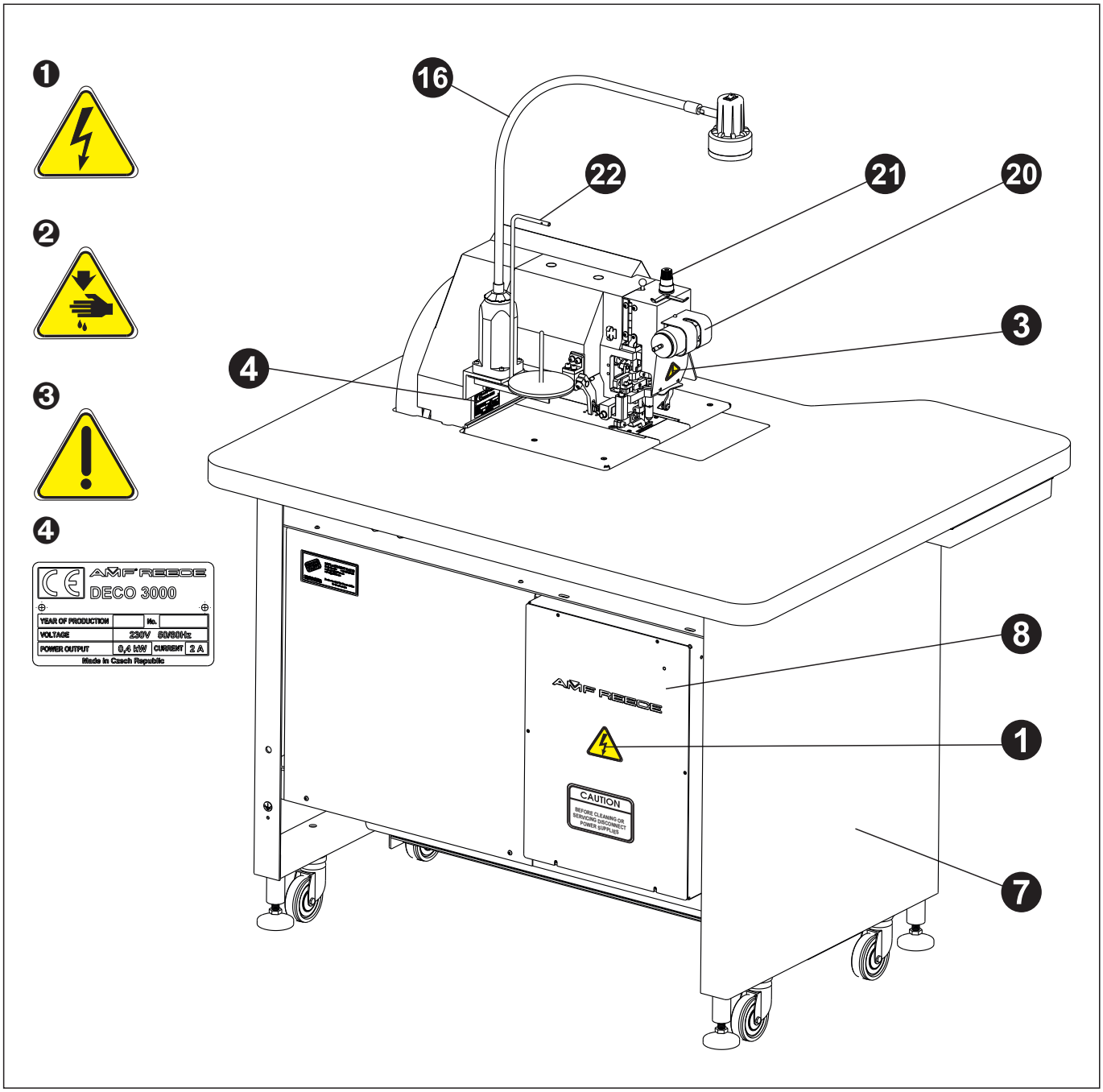

❶ Warning
❷ Danger - possible injury
❸ Covers removed, possible injury
❹ Standard Label
❺ Needle Bar Cover
❻ Display
❼ Table
❽ Control Box
❾ Stop Button
❿ Hand Wheel

Released: 04/2024
E-mail: info@amfreece-cars.cz

A - INTRODUCTION

5. GENERAL MACHINE PARTS DESCRIPTION

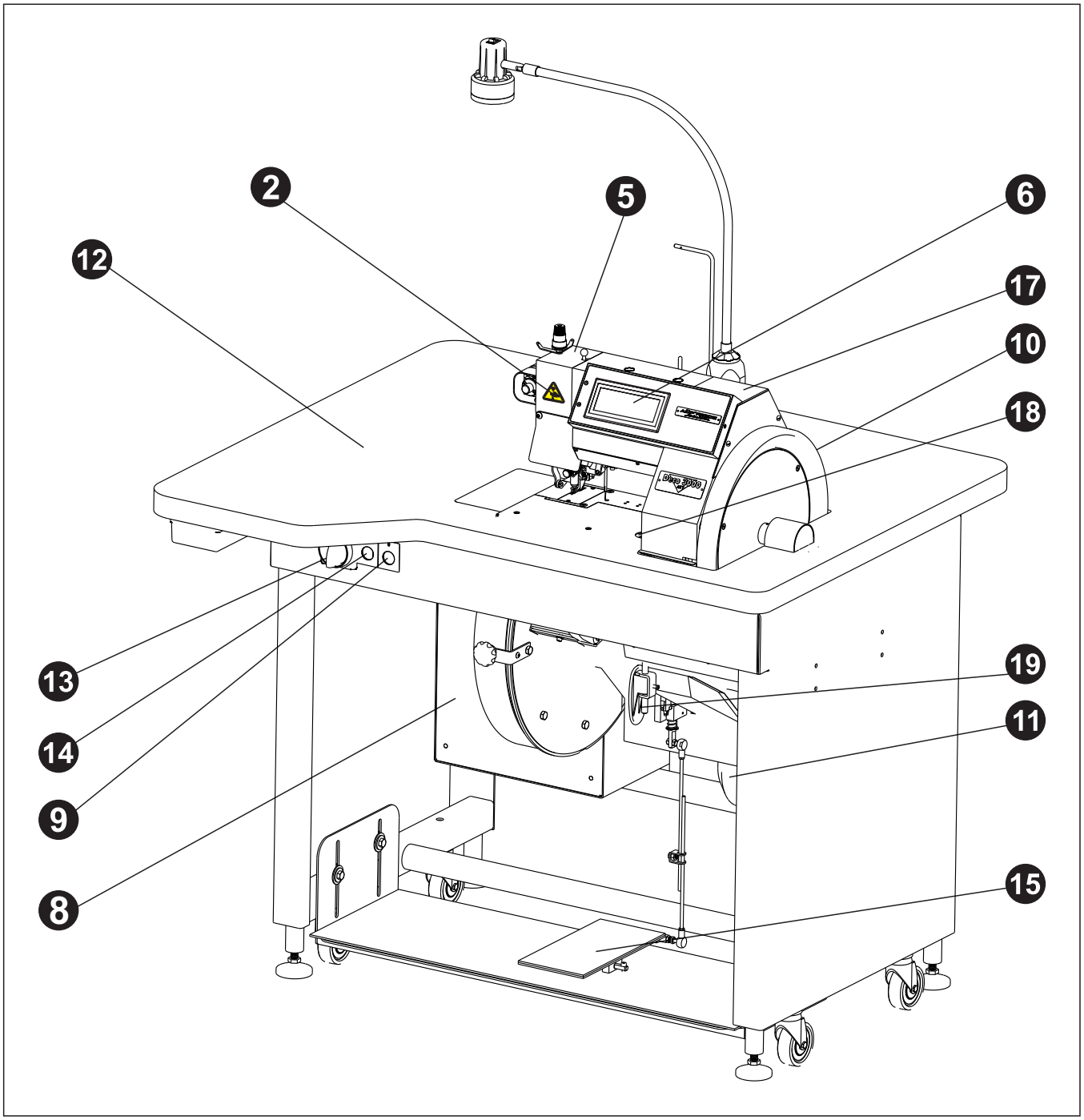

⓫ Motor Sew
⓬ Table Top
⓭ Main Power Switch
⓮ Start Button
⓯ Foot Pedal
⓰ Halogen Lamp
⓱ Machine Head
⓲ Reverse Button
⓳ Knee Lever
⓴ Thread Trim
㉑ Large Tension Assembly
㉒ Thread Stand

A - INTRODUCTION

6. INFORMATION NECESSARY FOR A CLAIM

6.1. In case of a claim communicate the data from the serial number plate – serial number and the year of production.

6.2. Describe the defect, enclose with a photo whenever applicable.

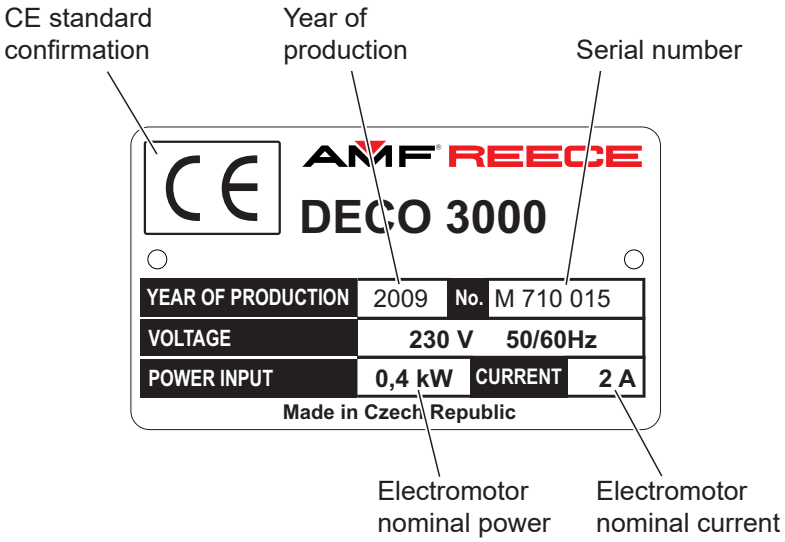

7. INSTRUCTIONS FOR THE SECURITY OF THE OPERATOR AND MAINTENANCE

When the machine is set to the working area, it is recommended to keep the minimal distance said in the drawing.

DANGER! Do not place the machine close to the steam irons because higher temperature than is said in chapter Specifications can cause slight loss the quality of the waxed silk threads. Observe all directions said bellow.

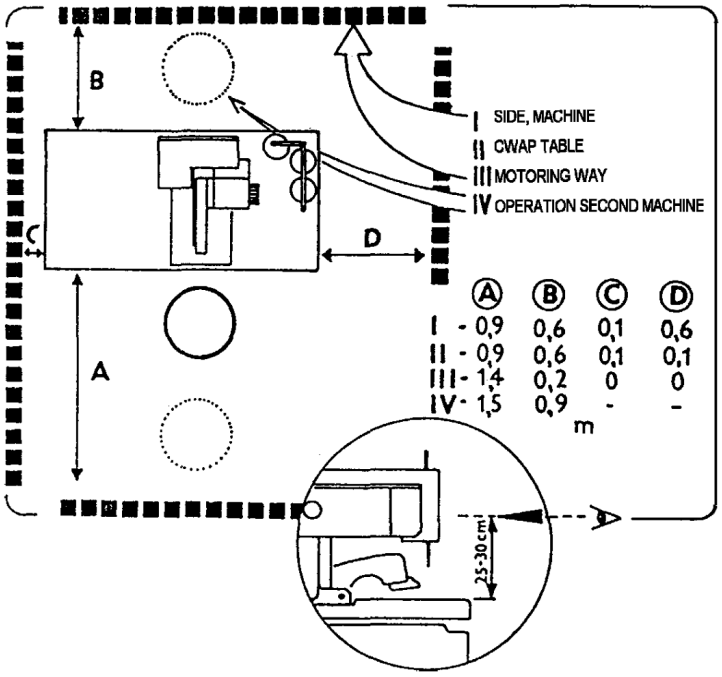

Released: 04/2024
E-mail: info@amfreece-cars.cz

A - INTRODUCTION

WARNING!

- Before machine connection to the power make sure, whether all safety covers are mounted.
- If it is necessary to remove some safety covers, switch off the operating switch (circuit breaker) and disconnect the machine by the fork of supply from the socket.
- Do not connect the machine to the power if some cover is removed.
- Disconnection of connectors, when the machine is under electrical power is prohibited
- ***Possible damage of electrical components and motors***

WARNING!

- Remember the position of the ***Emergency stop button*** so that is possible use it from the arbitrary position.
- Make sure, whether supply of energy and its dimensioning and safeguarding allows permanent supply of energy needed for dependable output of the machine.
- Check if the electrical cables are not damaged, so that be touch with uncovered conductor, can not occur any injury.
- When the covers are damaged, repair or replace them immediately for the new ones.
- Do not touch rotary shafts by hands.
- In any circumstance, do not put hands to the needle space.
- Before changing the needle, switch off the operating switch (circuit breaker).
- Before cleaning or any maintenance work on the machine, disconnect the power supply by removing the plug from the socket.
- In case when the operator will not work on the machine, disconnect the power supply by removing the plug from the socket.
- Do not adjust the machine in any way, which could endanger its safety.
- Every part of the machine can be dangerous, if there is incorrect manipulation or faulty maintenance with the machine. That is why everybody, who will manipulate, maintain or operate with this machine must be acquainted with informations included in this manual.

CAUTION!

- Perform all regular service as described by this manual.
- If there is any problem with power supply, turn off the mine power switch (circuit breaker).
- Do not remove, paint over, damage or any way change safety labels. If a safety labels are lost or cannot be easily read, order the new one in our factory and place them on the original place.
- Long hair and loose clothing may be dangerous near any machinery. Always contain long hair and avoid loose clothing, so that it cannot be caught by machinery and cause injury.
- Never use this machine while under the influence of drugs or alcohol.
- If anything seems to be operating incorrectly in the machine call for maintenance assistance immediately.
- Be sure that there is adequate light for safe operation. A normal minimum light level is 750 Lux.
- Do not operate the machine when changing from cold to heat.

A - INTRODUCTION

8. SPECIAL ACCESSORIES

	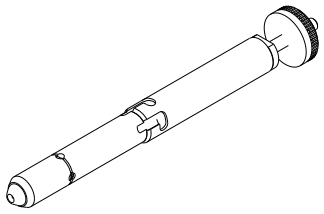	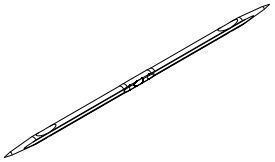	
Size	**Needle bar**	**Needle**	**Recommended for**
# 38	70.9001.0.050	00103238	Medium weight materials
# 49	70.9002.0.050	00103249	Heavy weight materials
# 26	70.9003.0.050	00103226	Light weight materials

There are two needle bars in the machine.

For high quality suits we recommend Rice WAXED THREAD.
It is available in 2 sizes:

- Size A for Light weight materials
- Size C for Medium / Heavy weight materials

Note!
Other high quality threads may be used, with some loss of quality and production.
Needles and threads can be ordered at out distributors.

To ensure consistent production quality, use only original parts and accessories.

Released: 04/2024
E-mail: info@amfreece-cars.cz

B - MACHINE ASSEMBLY

1. CONTENT OF THE SHIPPING BOX

1. The delivery usually contains one box, if it is not mentioned otherwise during the ordering. The box contain machine and dismount table.

2. In a box is also carton with accessories and operation instruction with spare parts manual.

3. When unpacking the delivery, follow labels which are on a cover.

CAUTION! If the delivery was damaged during the transport, inform the carrier. Check the contains of the delivery with order. In case that there are some faults, immediately inform the manufacturer-later complains will not be taken into consideration.

2. TABLE INSTALLATION

Install the table to the hinge on the rear side of the machine. Tighten the screws ❶ well. Fold the table up and screw ❷ the holder ❸ to the machine frame.

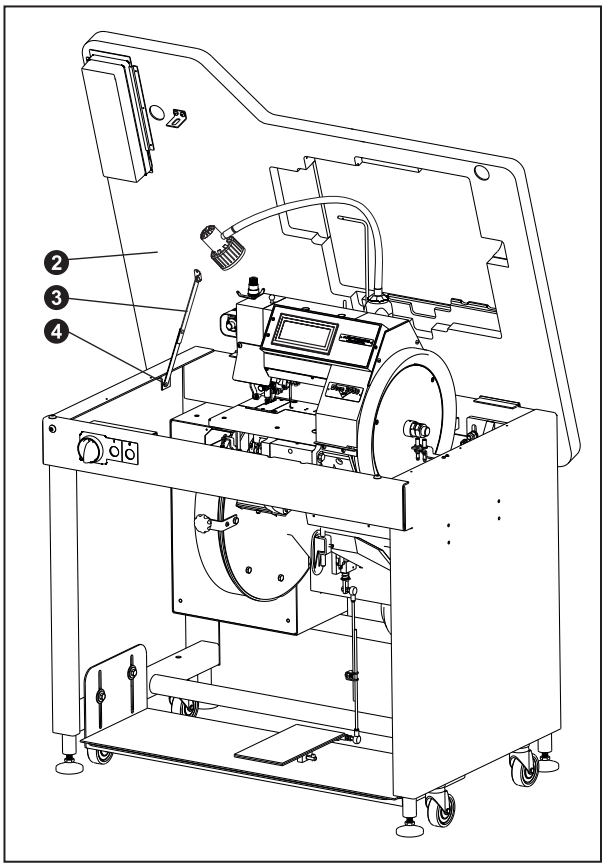

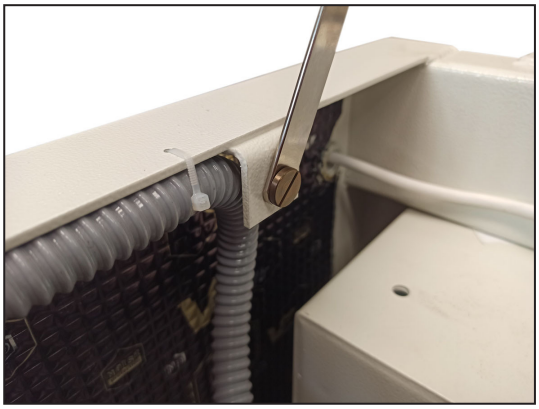

3. CONNECTION OF THE MACHINE TO THE POWER SUPPLY

Power supply must be 208 to 230 volts 1 phase, 50 or 60 hertz. Receptacle plug must meet requirements of IEC standard 364-4-41, its circuit breaker must be minimal 10A with characteristic C according to the EN 60947-2 (or 16A with characteristic B). No other devices must not be connected to the circuit breaker of the socker.

The machine is equipped with a filters which contain capacitors which generate an high frequency leakage current. In order to prevent nuisance tripping, residual current protection device must be protected against these high frequency currents: this is the case for industrial residual current device (example „S“ type).

C - MACHINE CONTROLS

1. POWER UP

1.1. Connect the machine to the power supply of appropriate voltage 230 V.
To start the machine turn the main switch ❶ to position 1.

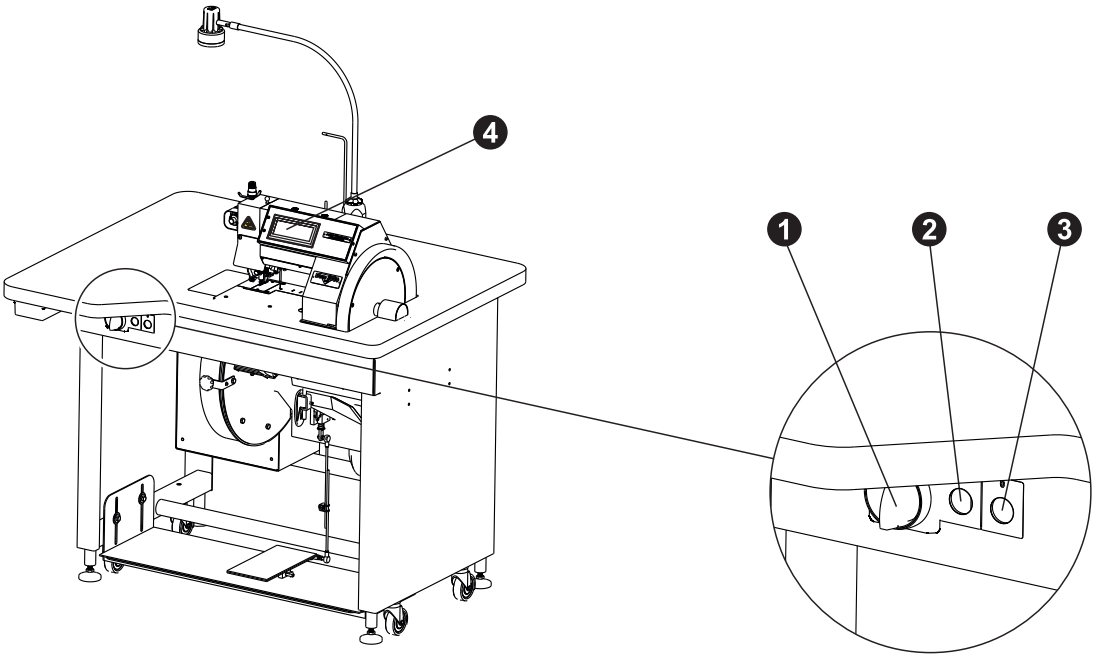

1.2. The display ❹ is activated and lit up.
Information about AMF REECE and the program version recorded in the machine temporarily appears on the screen.

1.3. This screen is automatically changed to the fault screen ❺. This screen informs the operator of any machine faults. Release the black STOP button ❸ and press the green START button ❷ and this screen will disappear.

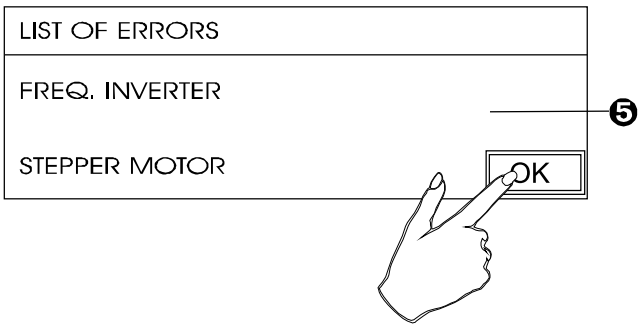

1.4. The main menu appears on the screen.
The machine is ready to sew or adjustments to the parameters to be made.

CAUTION!
The faults will be also displayed, if the drum cover (part no. 41831082) is open. Close the drum cover and press the OK button on the screen - see chapter Troubleshooting.

Released: 04/2024
E-mail: info@amfreece-cars.cz

C - MACHINE CONTROLS

2. CONTROL PANEL DESCRIPTION

Main menu:

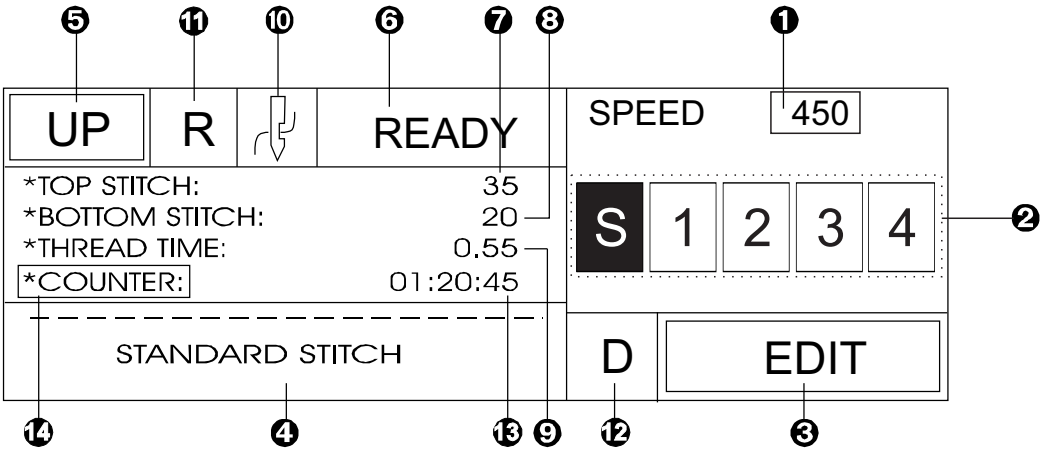

❶ Press the 450 button to enter the sewing speed adjustment.
❷ Stitch style change.
❸ Press the EDIT button to enter to the next menu to set the stitch length and stitch style.
❹ Information about set stitch style.
❺ Press the UP button to bring the machine to the home position - (the needle is up).
❻ Mode display - Standard:

READY - the machine is ready to sew.- backling green

EDIT - the machine is in process setting parameters.- backling orange

RUN - the machine is sewing.- backling green

- Errors ERROR - fault on the machine.- backling red

❼ Top stitch length parameter.
❽ Bottom stitch length parameter.
❾ Thread time
❿ Thread trim (On / Off)
⓫ Reverse is activated when displayed letter **R**.
⓬ Tie off information (D - dense)
⓭ Operating time counter machines
⓮ Press to go to the screen *COUNTER:

3. SEWING SPEED ADJUSTMENT

3.1. To change sewing speed press the 450 button on the main screen.

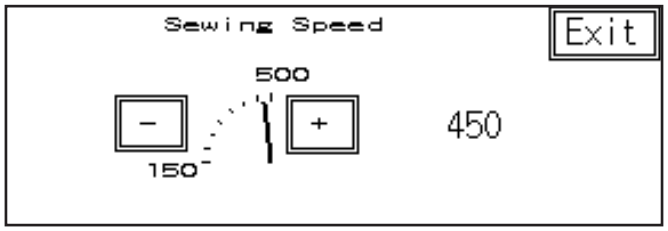

C - MACHINE CONTROLS

3.2. It is possible to increase or decrease the sewing speed in the range from 150 to 500 spm. The current sewing speed is shown on the upper part of the main screen ❶, and also by the diagram.

To increase the sewing speed press the [+] button. To decrease the sewing speed press the button [−].

4. TOP STITCH AND BOTTOM STITCH LENGTH ADJUSTMENT

4.1. To change the length of the Top stitch and Bottom stitch press the [EDIT] button on the main screen.

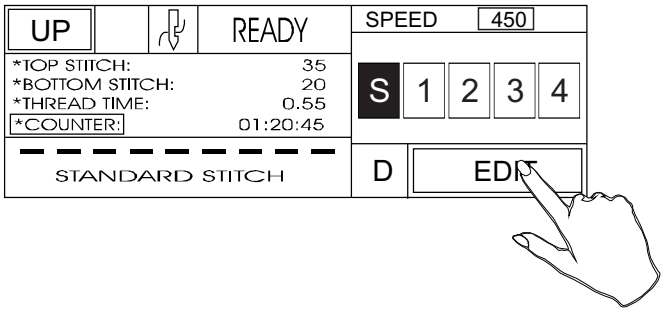

4.2. The screen for setting the parameters appears on the display. To change the size of the Top stitch, press the top stitch value on the screen ❶.

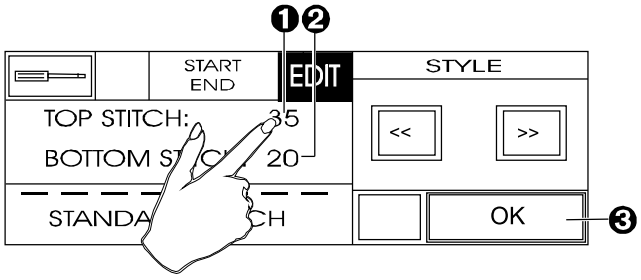

4.3. The numerical display appears on the screen. The range of stitch length parameters is from 0 to 63. Set the required parameter for the Top stitch.

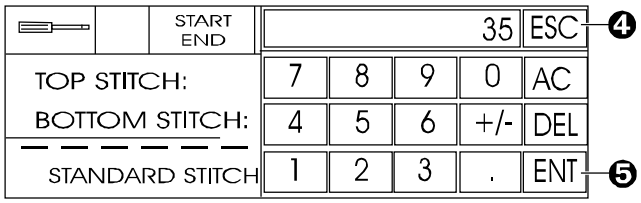

Press [ENT] ❺ to confirm set parameter and move back to previous screen.
Use the same method to set the parameters of the Bottom stitch ❷. Parameters selected in this numerical screen must not exceed a maximum value of 63 units, with one unit equal to 0.1 mm.

Press [ESC] ❹ to keep previous set parameter. The previous display with the original parameter appears on the screen.

4.4. When all required parameters are set, press the [OK] button ❸ to move to the main screen.

Released: 04/2024
E-mail: info@amfreece-cars.cz

C - MACHINE CONTROLS

CAUTION!
If the stitch length parameter is greater than the allowed range, this note appears on the screen:

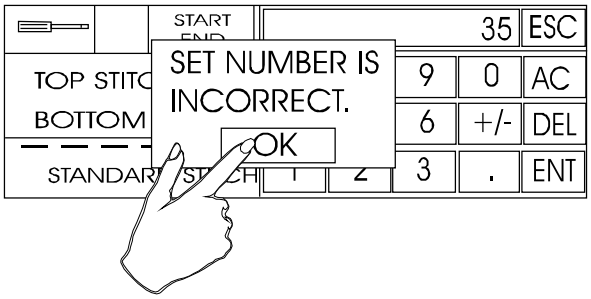

Press the arrow.
The previous display appears on the screen. Set the required parameter within the maximum al lowed value of 63.

NOTE!
If the stitch reverse facility is required, press the blue **REVERSE** button on the right side of the work table.

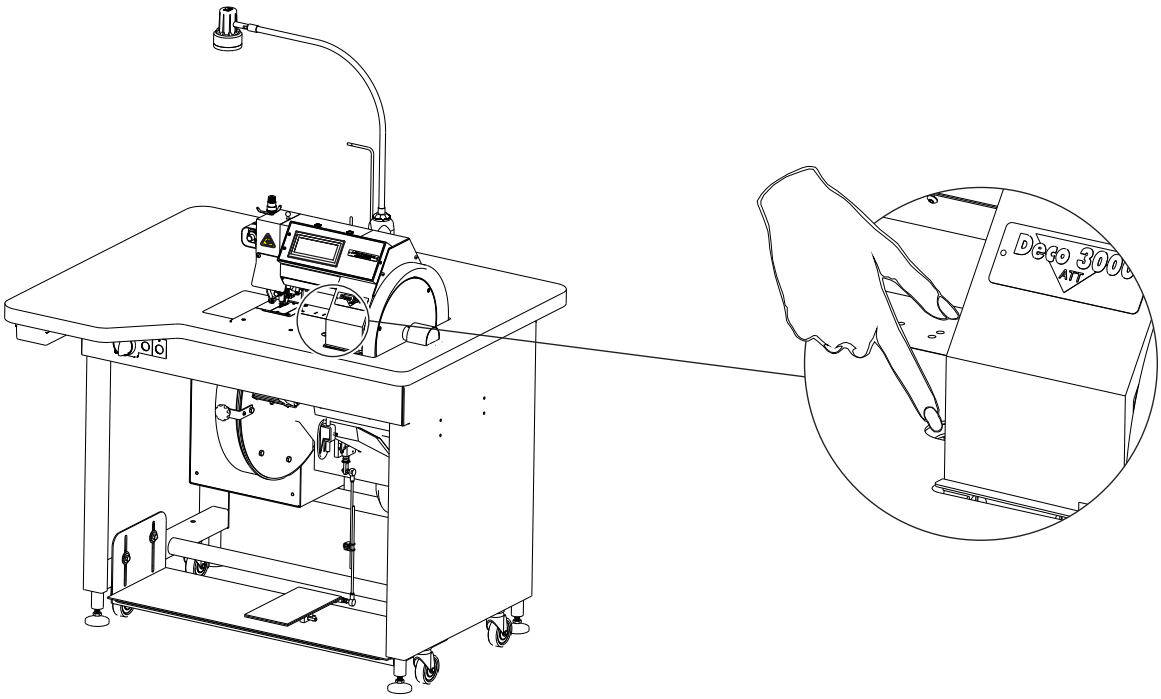

The reverse button is lit, and the letter **R** appears on the screen ❶.

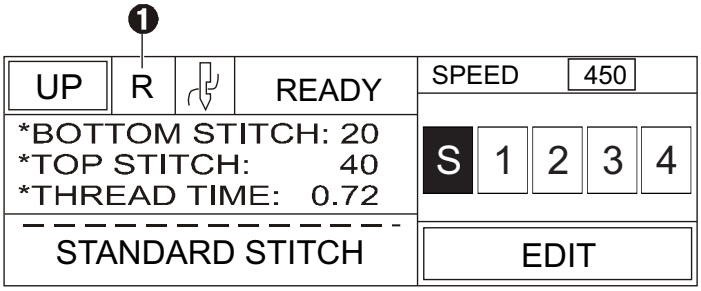

The Top stitch and Bottom stitch parameters will reverse.
To return to the original parameters press the blue reverse button on the machine. The letter **R** ❶ will disappear.

C - MACHINE CONTROLS

5. SETTING THE STITCH STYLE

The standard stitch is created by repeating the Top and Bottom stitch lengths during sewing.
As well as the standard stitch it is possible to select another four stitch styles and set ten different lengths of Top and Bottom stitches.
The operator can create the stitch style and sequence of stitches as needed.

5.1. To change the stitch style, press EDIT on the main screen.

5.2. The next screen will appear on the display:

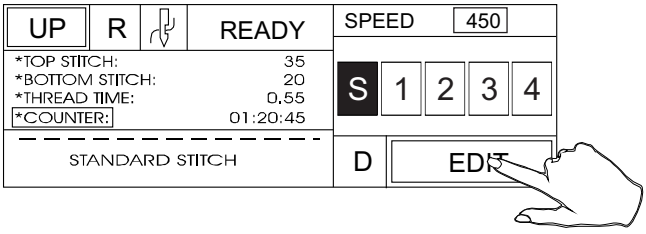

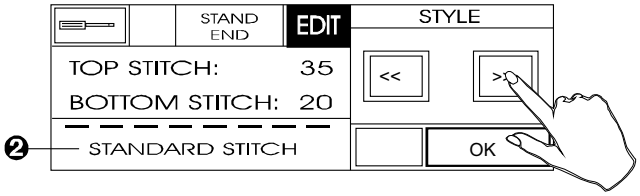

To set the stitch style, standard stitch 0 or the other stitch styles from 1 to 4, press the left or right arrow. The current set stitch style is always shown on the left corner of the display ❷.

5.3. After the arrow is pressed the screen is changed but it is still possible to change the stitch style by the arrows ❸ and ❹.

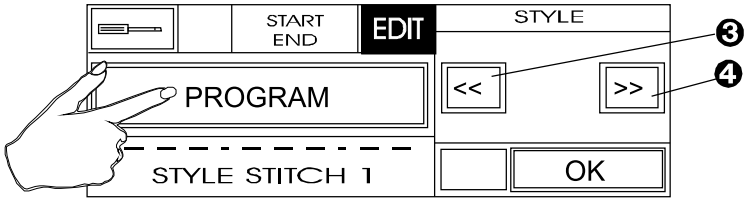

To set the stitch length, press the PROGRAM button .

5.4. The numerical screen appears on the display with first 5 columns of parameters. Touching the button 6 –>10 on this screen would enter into another screen for next 5 parameters and it is possible to switch back to previous screen by touching the button 1 –> 5.

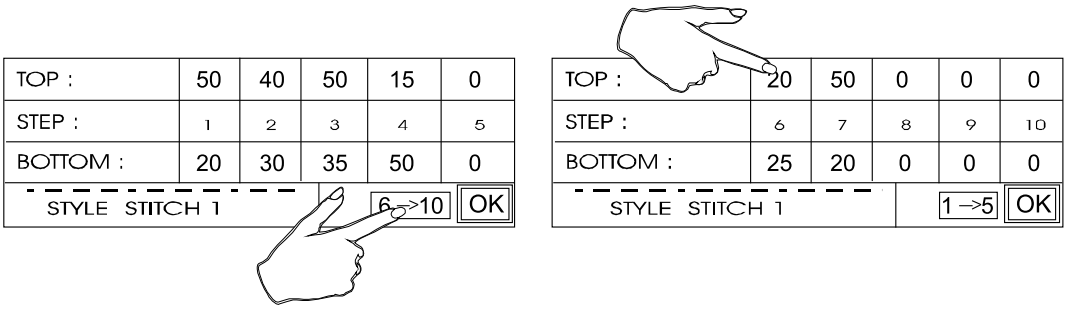

TOP :	50	40	50	15	0
STEP :	1	2	3	4	5
BOTTOM :	20	30	35	50	0

STYLE STITCH 1 | 6 –>10 | OK

TOP :	20	50	0	0	0
STEP :	6	7	8	9	10
BOTTOM :	25	20	0	0	0

STYLE STITCH 1 | 1 –>5 | OK

The first row shows the parameters of the Top stitch, the middle row shows the stitch sequence, and in the third row are parameters of the Bottom stitch length. It is possible to select ten different stitches length, which will be periodically repeated during the sewing. Top stitch + Bottom stitch = one step. To change the parameter press the number.

Released: 04/2024
E-mail: info@amfreece-cars.cz

C - MACHINE CONTROLS

5.5. The next numerical screen will appear on the display:

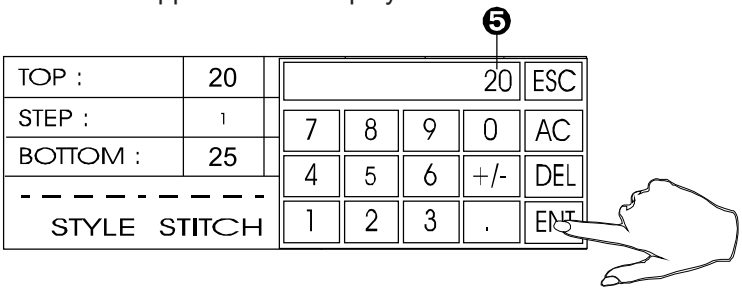

Set the required stitch length.
The set stitch length is shown on the upper part of the screen ❺. Press **Enter** to confirm the parameter. To keep the original set parameter press **Clear**. The buttons **Enter** and **Clear** always return you to the previous screen. Repeat the steps 4. and 5. until all required parameters have been set.

NOTE!
If the number of selected parameters is less than ten the other parameters must be zero so that the stitch length can be periodically repeated during the sewing. For example the parameters selected in the following numerical screen looks like this when sewns:

❻ Sewing material
❼ Thread
❽ Steps

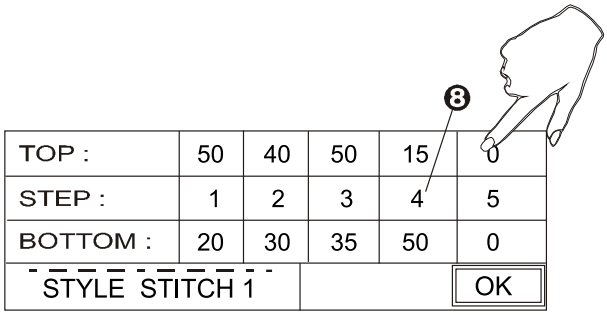

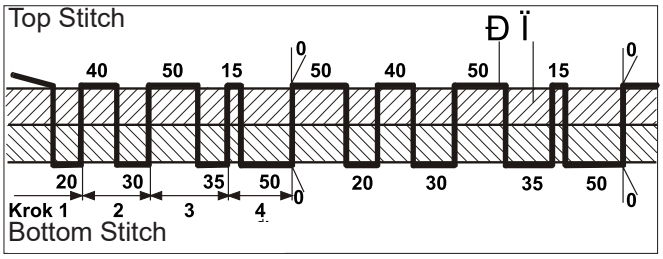

5.6. When all parameters are selected, press OK twice to get to the main screen.

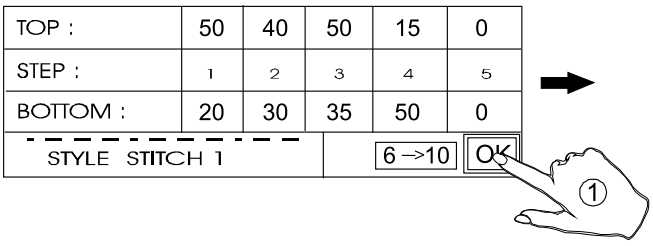

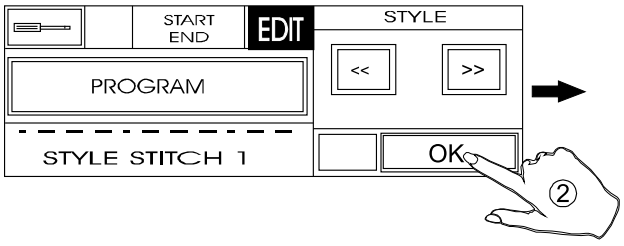

Then a new main menu, showing the new selected stitch style will appear on the screen.

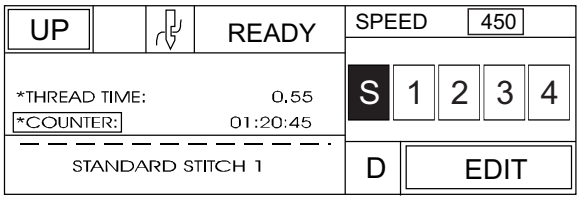

Unless the Standard stitch style is selected, the information about the Top and Bottom stitch length will not be shown on the screen. To get this information, follow the instructions - Setting the stitch style chap. 4.

C - MACHINE CONTROLS

6. THREAD TRIM - LENGTH ADJUSTMENT

6.1. If you want to change the trimmed thread lenght, press EDIT button.

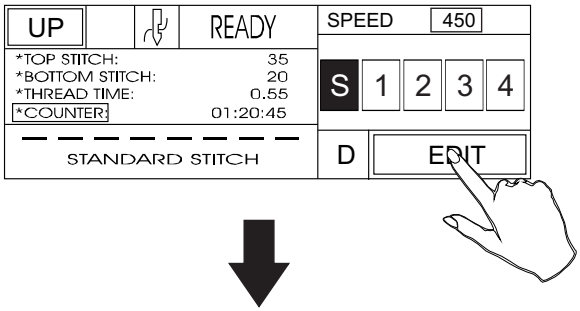

6.2. Press button.

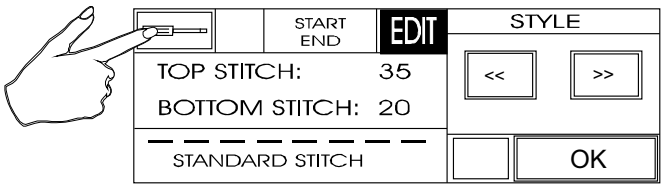

6.3. Press + or − for increasing or reducing the value. The shows the delay / start time of the cutting equiment after retacting the thread with the looper into the machine.

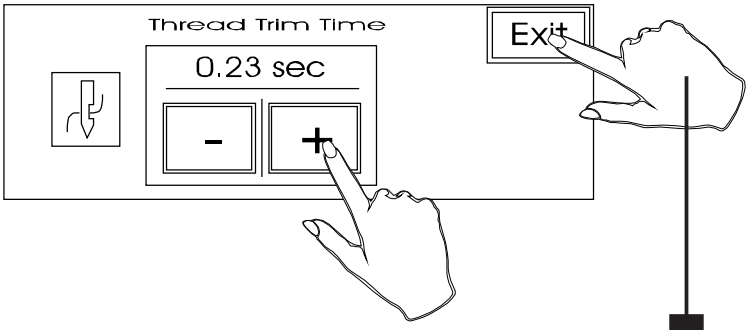

6.4. To return to the main screen, press Exit button.

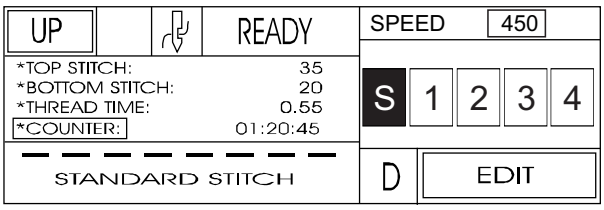

Released: 04/2024
E-mail: info@amfreece-cars.cz

C - MACHINE CONTROLS

7. COUNTER

7.1. The access the screen, press the countres *COUNTER:.

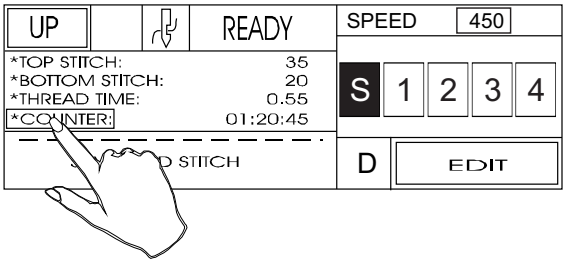

7.2. On the screen there are three counters:

❶ Counter top position of the needle

❷ Total running time counter machines - can not delete

❸ Total running time counter machines - can delete button Reset

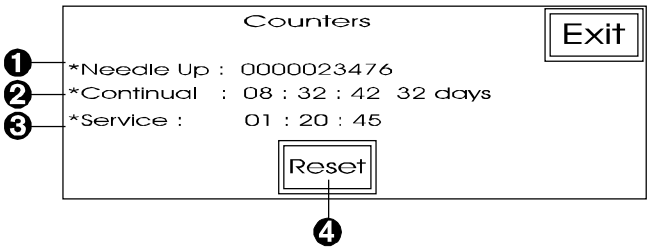

7.3. If the label *COUNTER: on the main screen is changed to *SERVICE: and starts flashing, it means that it is necessary to service the needle bar (see chapter E 2).

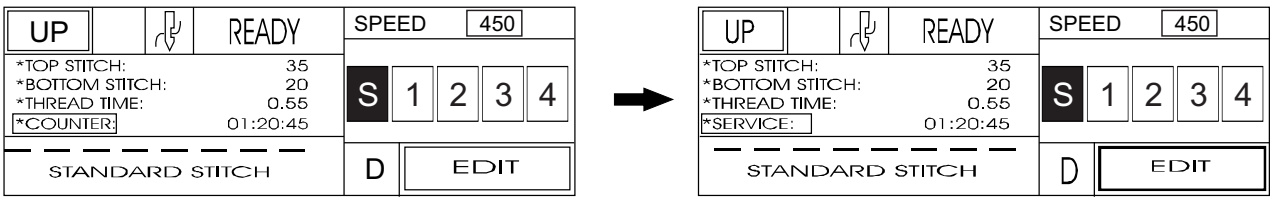

C - MACHINE CONTROLS

8. CONDENSED STITCH - DENSE

8.1. To select the condensed stitch parameters press EDIT button on the main screen.

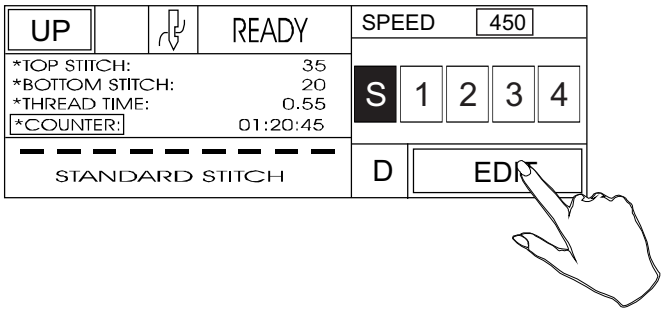

8.2. Press button ❶.

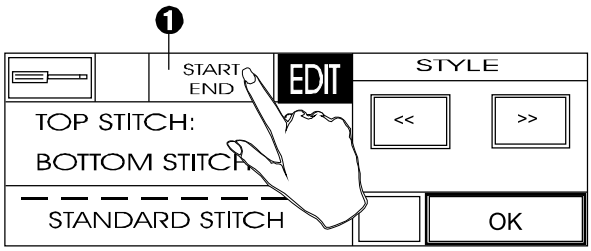

NOTE: If the machine is lying unused and not powered continuously for more than a week to 10 days, the password may be lost and would need to be entered again to activate the “Condensed Stitch Parameter” again.

8.3. Use the buttons ❶ to select the desired number of dense stitches.
Use the buttons ❷ to select the desired density.

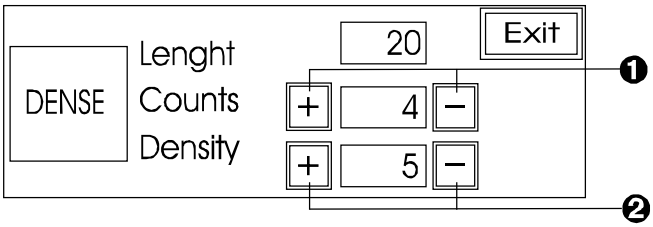

Released: 04/2024
E-mail: info@amfreece-cars.cz

C - MACHINE CONTROLS

9. TIE - OFF / BACK TACK

9.1. For selection of tie-off parameter, press EDIT from main menu scree.

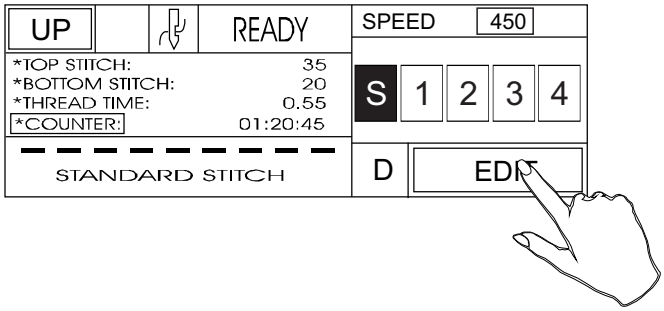

9.2. Since the Back Tack tie-off is password protected, press ❶ on the next screen.

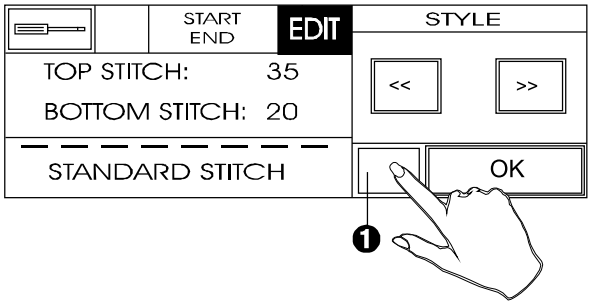

9.3. Password is supplied with a set . It is a five-digit number that you enter using the numeric keypad.

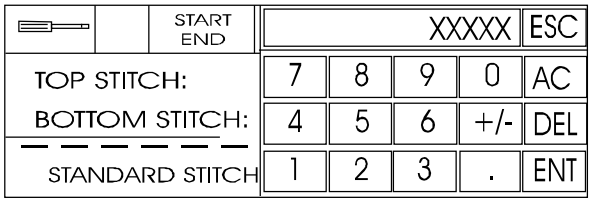

NOTE: If the machine is lying unused and not powered continuously for more than a week to 10 days, the password may be lost and would need to be entered again to activate the “Condensed Stitch Parameter” again.

9.4. Press the button on the screen START END.

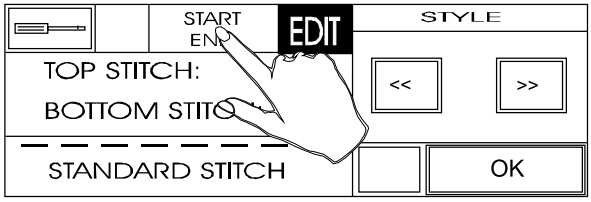

9.5. Press the button repeatedly to toggle between two tie-off styles Dense and Back Tack.

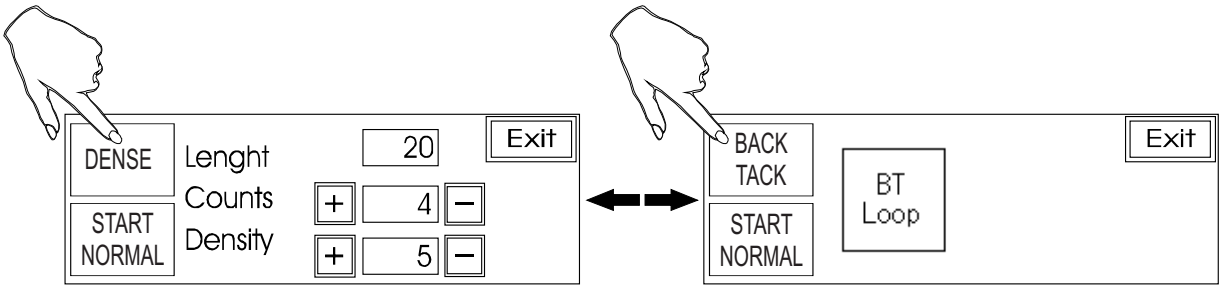

9.6. Press the button repeatedly to toggle between two styles of Back Tack. Back Tack with loop and Back Tack with adjustable count of stitches.

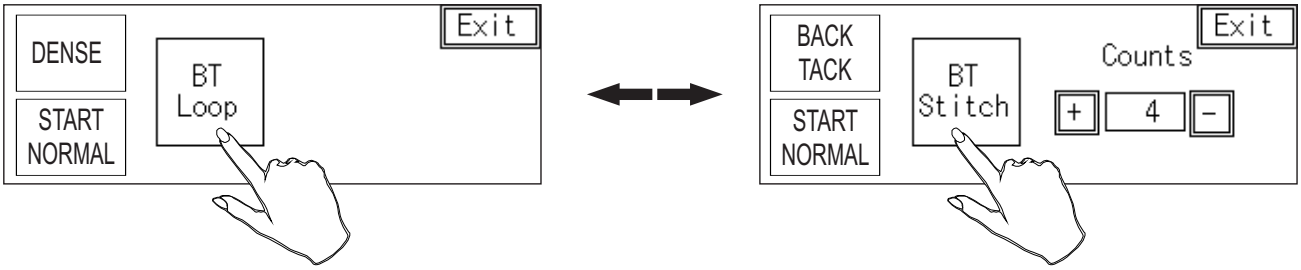

10. LONG THREAD SEWING

For long thread sewing (more than 100 cm) you need to start sewing initial stitches at slow speed.
To activate slow speed for initial stitches, press the button ❶ and switch from Normal Start to Slow Start. Select the desired number of slow stitches as Counts ❷.

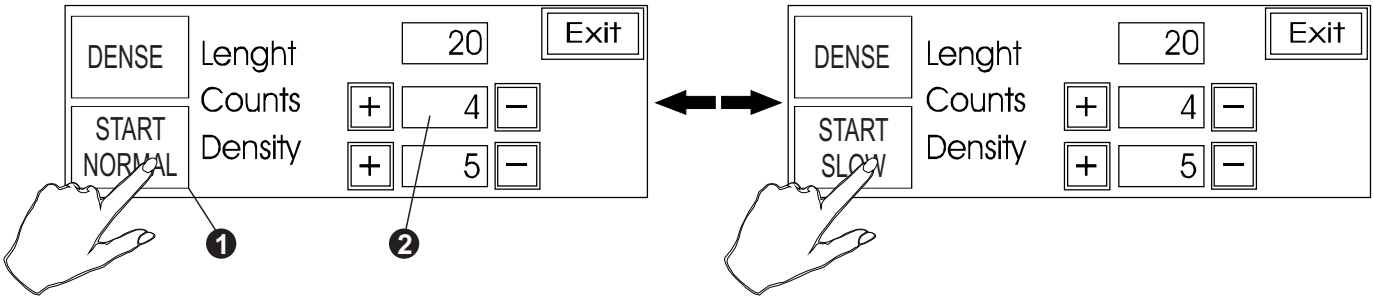

C - MACHINE CONTROLS

11. STARTING SEWING

Ensure that all set parameters concur with requirements. The machine is activated by one pedal (A), but it is possible to order the machine with two pedals (B).

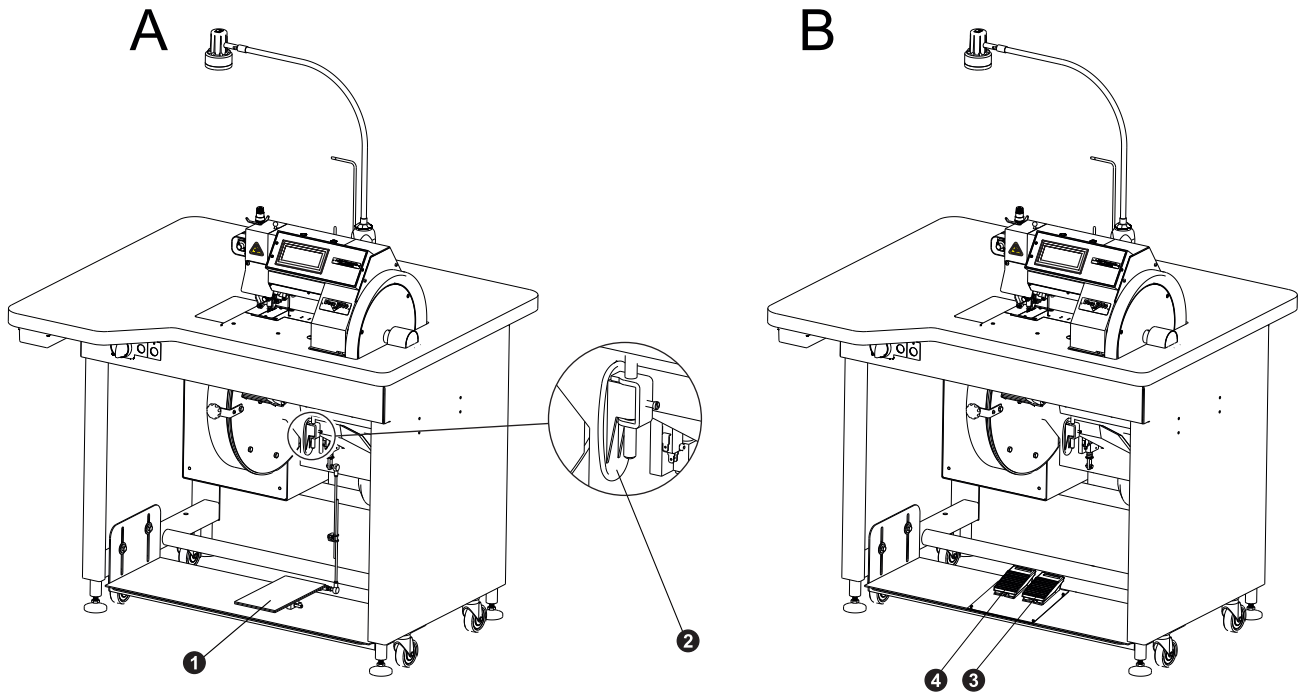

A - one pedal

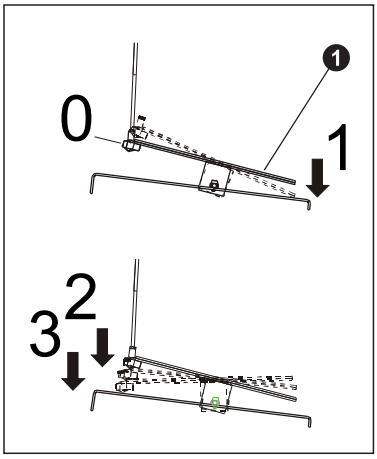

1. If the machine is not in the home position with the needle up, press the foot pedal ❶ in position 1 or the UP button on the left corner of the main screen.

2. Move the knee lever ❷ to the right. The foot will raise and you can place the material.

3. Press the foot pedal ❶ to the position **2** and start sewing with slow speed suitable for beginning of sewing if you press the pedal to the position **3**, you will reach maximal adjusted speed.

B - by two pedals

1. If the machine is not in the home position, press the right foot pedal ❸ or the UP button on the left corner of the main screen.

2. Raise the presser foot by moving the knee lever ❷ to the right. Place the material under the foot and release the knee lift.

3. Press the left foot pedal ❹ to start sewing. This pedal has two positions. By pressing the pedal to the first position the sewing speed is slow used especially at the start of sewing. To reach the maximum set sewing speed press the foot pedal fully.

4. The information about the sewing speed and selected stitch style appears on the screen during the sewing. There is no possibility to change these parameters when the machine is running and run is displayed on the screen ❺.

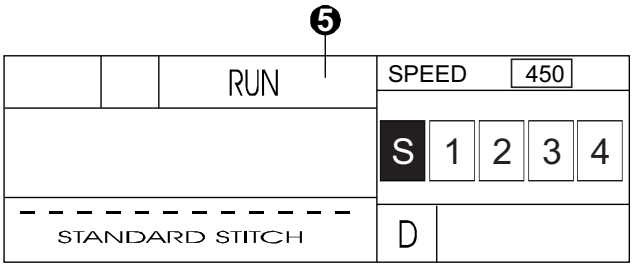

12. ERROR MESSAGES

If the Error message appears on the screen a fault has occurred.

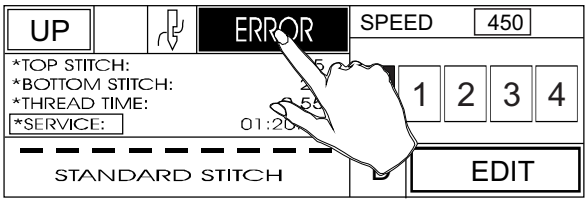

For more informations see section Troubleshooting - Electronic system error messages.

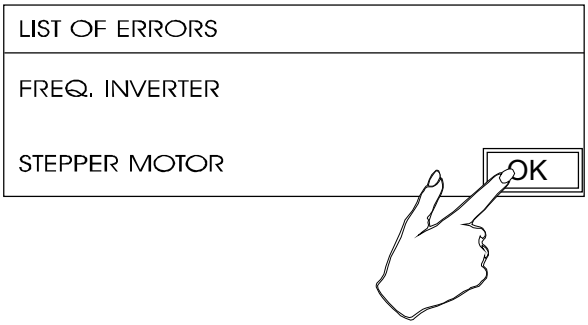

C - MACHINE CONTROLS

13. SWITCH OFF THE MACHINE

Emergency stop:
The machine can be stopped by the black STOP button at any time during sewing. Use this button in case of possible injury or machine damage. The button is located on the left side of the machine frame. The machine stops immediately when the Stop button is pressed. The error messages appears on the screen.

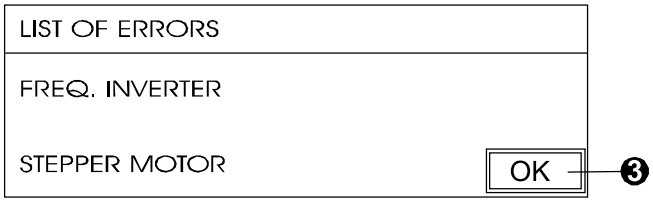

CAUTION!
Always remove the power supply to change the needle or make any other machine maintenance.
To sew again, press the green **START** button. The main menu ❶ appears on the screen.

a) To continue the sewing cycle press the foot pedal. (Left foot pedal, if the machine is equiped with two padals).
b) To start a new sewing cycle bring the needle up by pressing the UP button ❷ on the display or by the right foot pedal. Press the left foot pedal to start sewing cycle from the beginning.

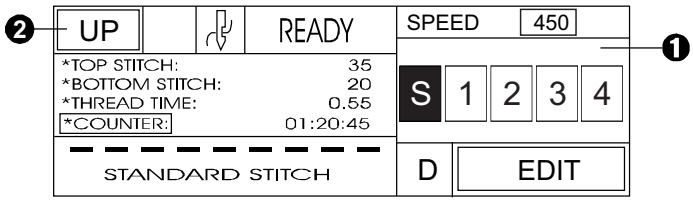

CAUTION!
If the OK button ❸ is pressed on the error screen, the display screen appears.

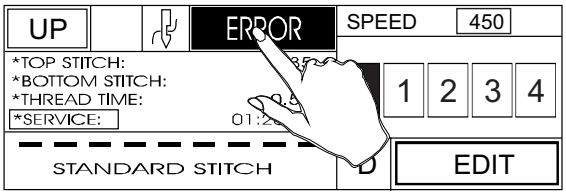

Press the **ERROR** button and the error message screen appears on the display again. Press the green **START** button.
The main menu ❶ appears on the screen. Then continue the procedure as in case a) or b).

Standard stop:
1. Release the left foot pedal, and the machine will stop sewing.
   Before turning off the machine make sure that the needle is up. If it is not in up position press the **UP** button on the main screen or press the right foot pedal.
2. Press the black **STOP** button on the left side of the machine frame.
3. To switch off the machine turn the main switch to the off position 0.

D - CORRECT MACHINE APPLICATION

1. NEEDLE INSTALLATION

Use only the needles number: 00103238 made in AMF Reece as is adduced in chapter Specifications A.
This type of needles was developed in AMF Reece. Double pointed needle which has an eye at the mid point, allows to transmitting the needle from one needle bar to the other and during the sewing maximally imitate the shape of the hand sewing.
Except that, this needle does not leave so big holes in sewn material which generally improves the quality of sewing work.

To replace the needle follow this steps:

- Bring the needle ❶ to home position by pressing the right foot pedal or by pressing the Up button on the display.
- To replace the needle, press the emergency Stop button.
- Grasp the rod ❷ and slide the needle bar upwards..
- Hold the needle bar up and remove the original needle. Insert a new needle so that the groove and the eye are from the front view on the left side. Do not install a bent or broken needle.
- Grasp the rod ❷ and slide the needle bar downwards.

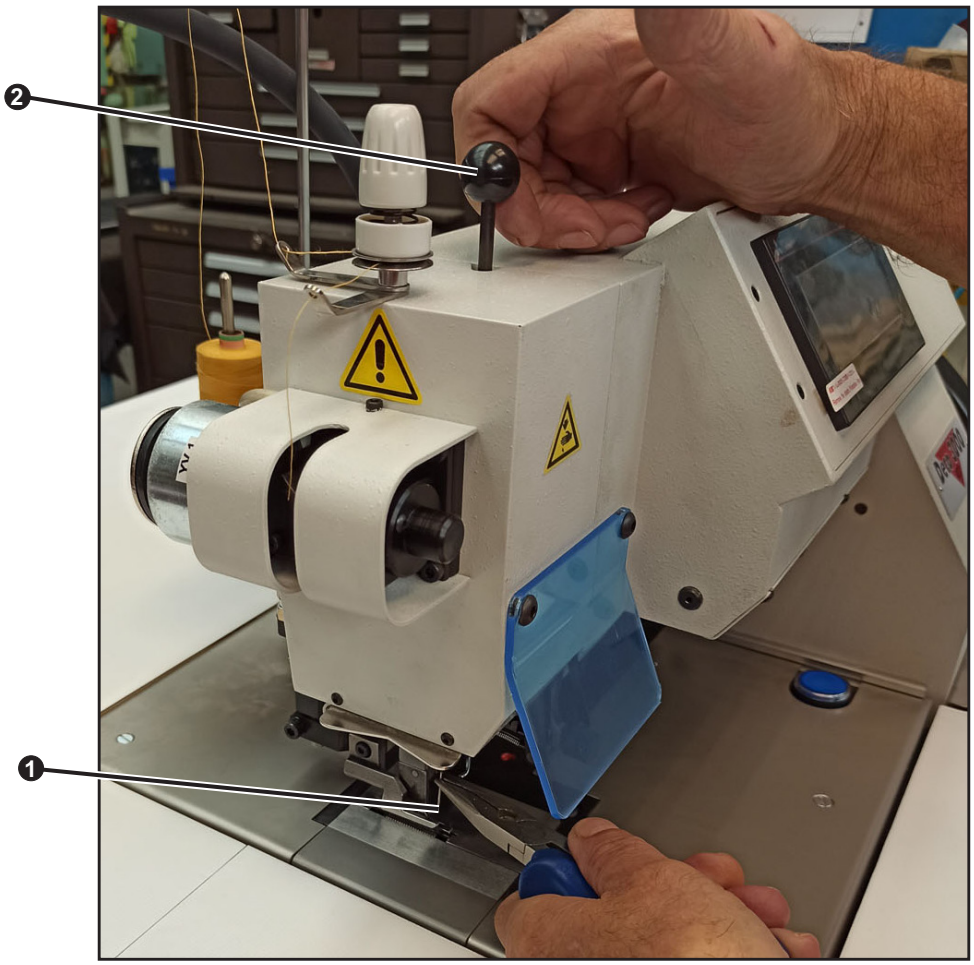

Released: 04/2024
E-mail: info@amfreece-cars.cz

D - CORRECT MACHINE APPLICATION

2. THREADING

When threading see the pictures below.
Easy threading allows the threading device located on the right side of the needle.

- Bring the needle to the home position by pressing the right foot pedal or by pressing the Up button on the display.
- Move the lever of threading device down, so that the hook passes through the needle eye.
- Place the thread behind a hook and release the thread device lever.

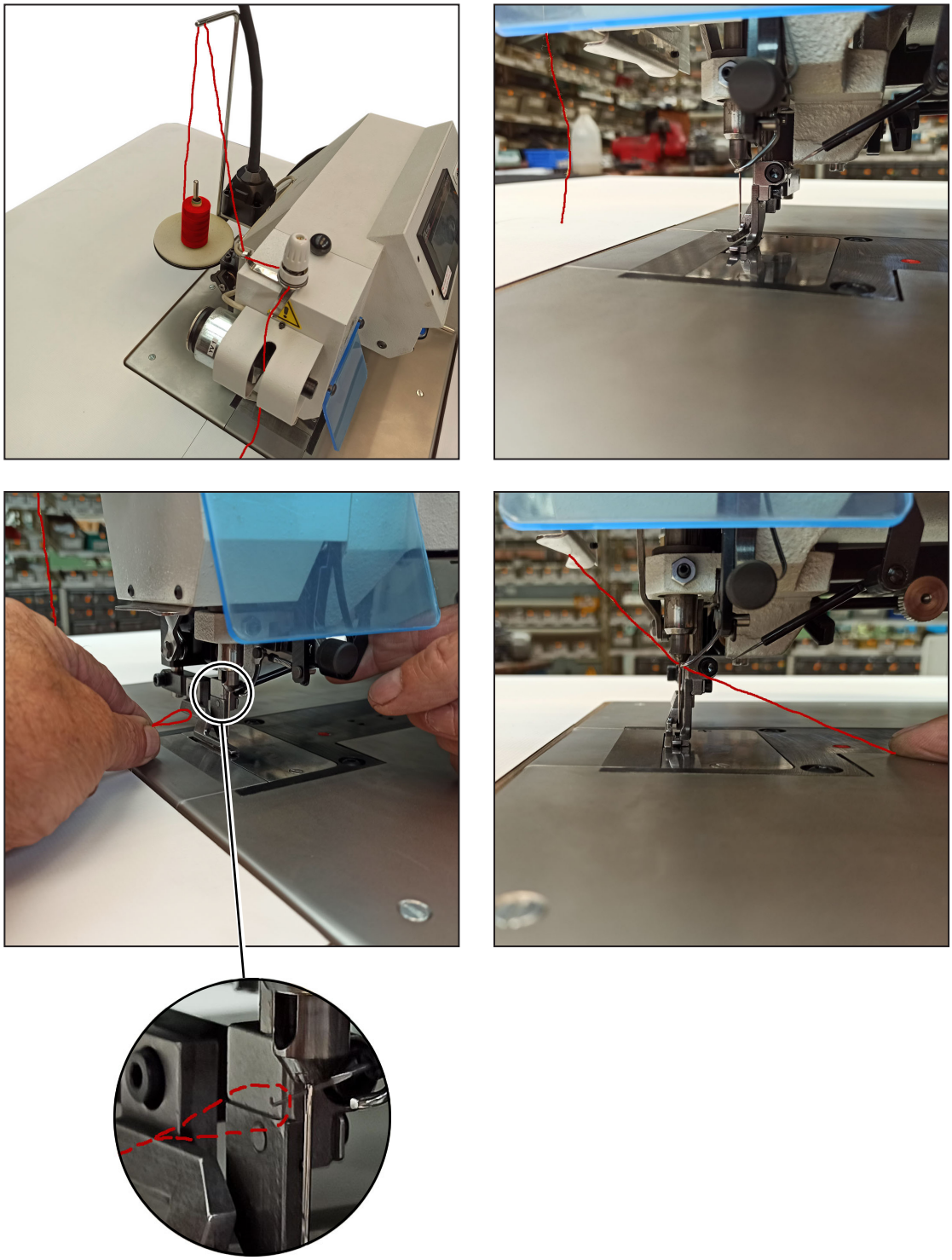

E - STANDARD MACHINE ADJUSTMENT

1. ADJUSTMENT

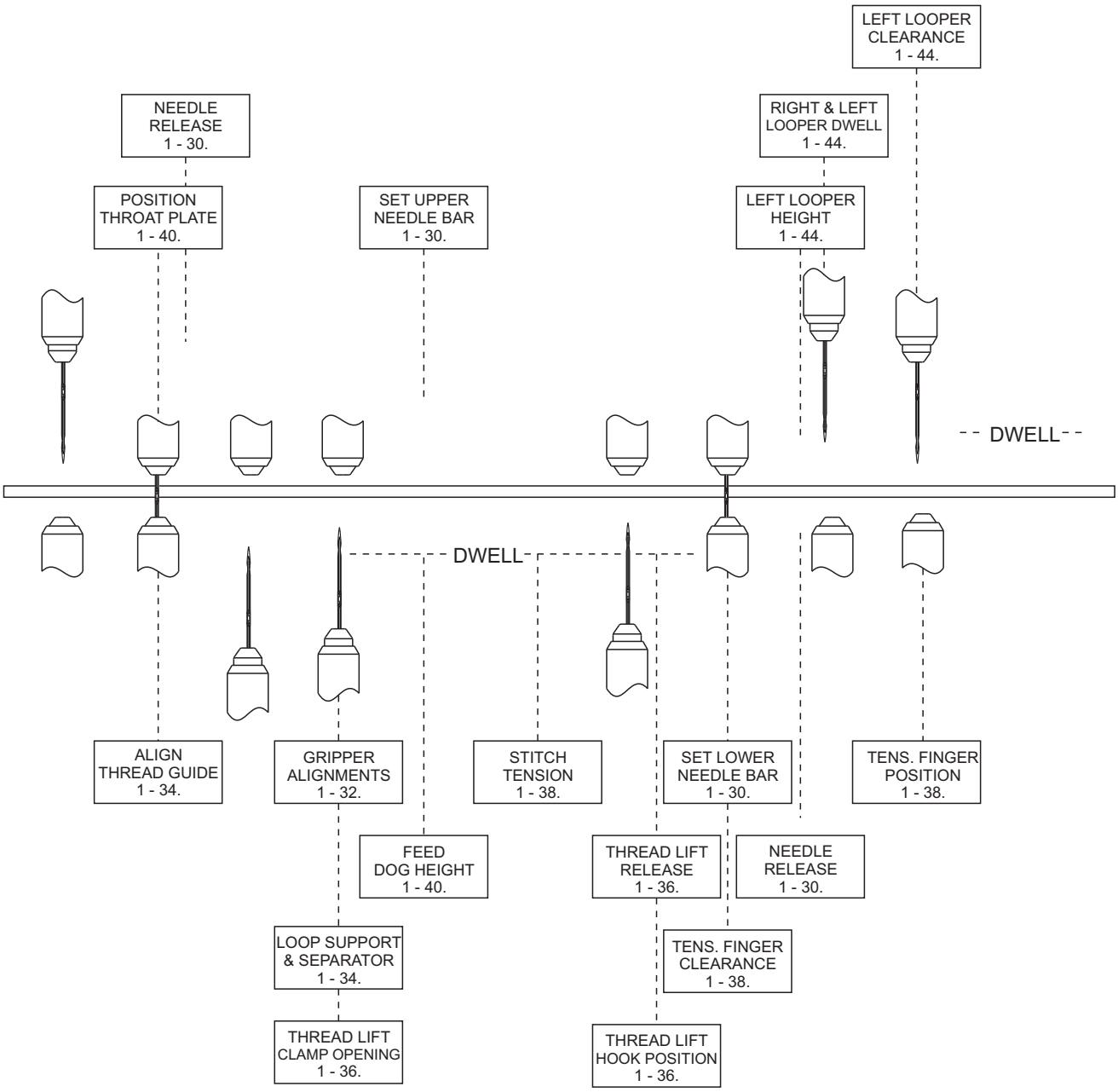

Released: 04/2024
E-mail: info@amfreece-cars.cz

E - STANDARD MACHINE ADJUSTMENT

2. TIMING

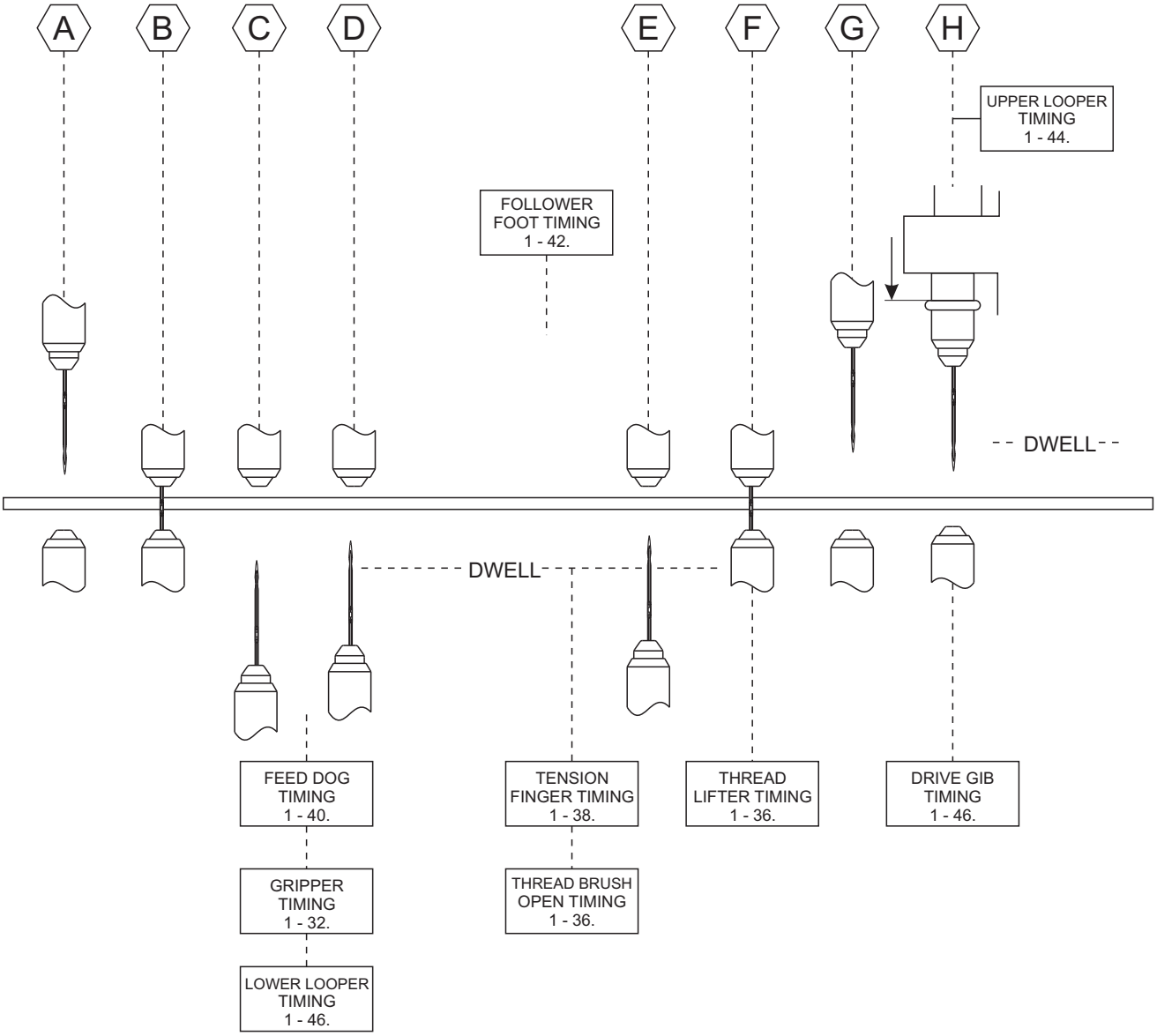

E - STANDARD MACHINE ADJUSTMENT

3. ADJUSTMENT OF NEEDLE BARS

3.1. Adjust the upper and lower needle bar

Turn the hand wheel to the DWELL position.

First, loosen the clamping screw ❻. Using the square head adjustment screw ❹ on the back of the lower rocker arm, move the lower needle bar ❺ to the lowest position. Tighten clamping screw ❻.

Loosen the clamping screw ❸. Using the square-headed adjuster ❶ on the rear of the rocker arm, adjust the distance between the lower needle bar ❺ and the upper needle bar ❷ so that the needle from the upper needle bar clicks lightly into the lower needle bar. The needle must not bend when passing between the upper and lower needle bar! Tighten the clamping screw ❸.

3.2. Adjust the needle release

With the needle in the upper needle bar, rotate the handwheel ❼ to bring the needle just to the transfer point to the lower needle bar.

Move the handwheel back and forth slightly to test the needle release from the upper needle bar.

Loosen the jam nut ❽ on the top of the needle bar. Rotate the sleeve adjust nut counterclockwise (viewed from above) quarter turn at a time until the needle does not release. Reverse the nut clockwise until the needle just release at the transfer point. Turn clockwise (half turn). Tighten the jam nut ❽.

Make the same adjustment on the lower needle bar to get needle release from the lower needle bar to the upper needle bar. Oscillate the handwheel to assure that the needle transfers properly.

Released: 04/2024
E-mail: info@amfreece-cars.cz

E - STANDARD MACHINE ADJUSTMENT

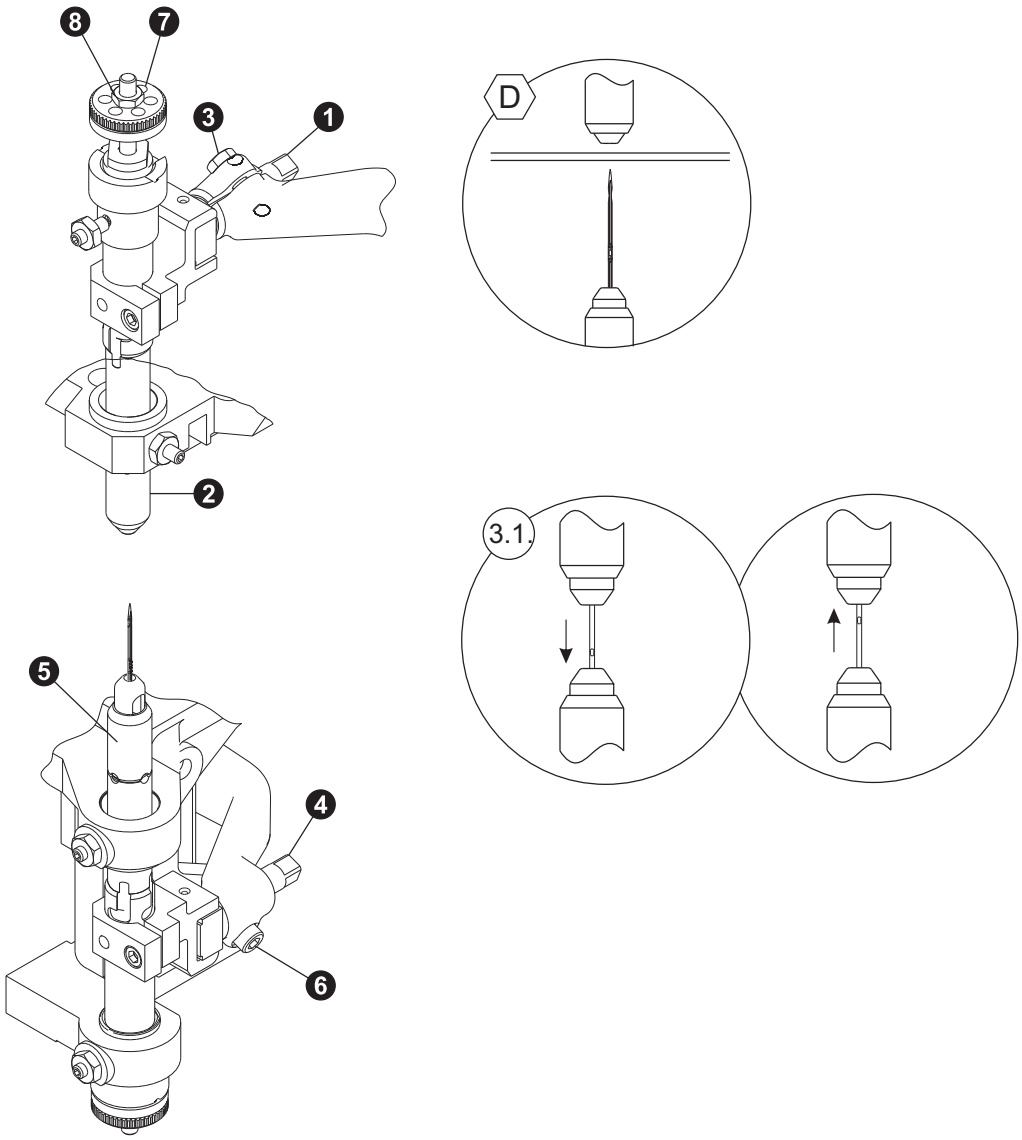

E - STANDARD MACHINE ADJUSTMENT

4. ADJUSTMENT AND TIMING OF GRIPPER FINGERS

4.1. Align to the needle

Bring the gripper fingers ❶ into the closed position.

Loosen two mounting screws ❷ holding the finger bracket.

Move the finger bracket ❸ to get 0,13 mm clearance between the needle and the end of the pads on the gripper fingers. Tighten the screws ❶.

4.2. Adjust finger closing

Bring the gripper fingers ❶ into the closed position with the lower needle bar in the DWELL position.

Loosen two screws ❹ holding the pivot bracket.

Move the pivot bracket to close the fingers. Be sure to remove all play in the mechanism.

Tighten the screws ❹.

4.3. Timing the gripper fingers

Bring the lower needle bar at 0,4 až 0,8 mm before the needle reaches the DWELL position.

Loosen the 3 screws ❺ clamping the thread clamp cam ❻ on the main cam shaft.

Rotate the cam to just close the gripper fingers. Tighten the clamping screws ❺ on the cam.

Released: 04/2024
E-mail: info@amfreece-cars.cz

E - STANDARD MACHINE ADJUSTMENT

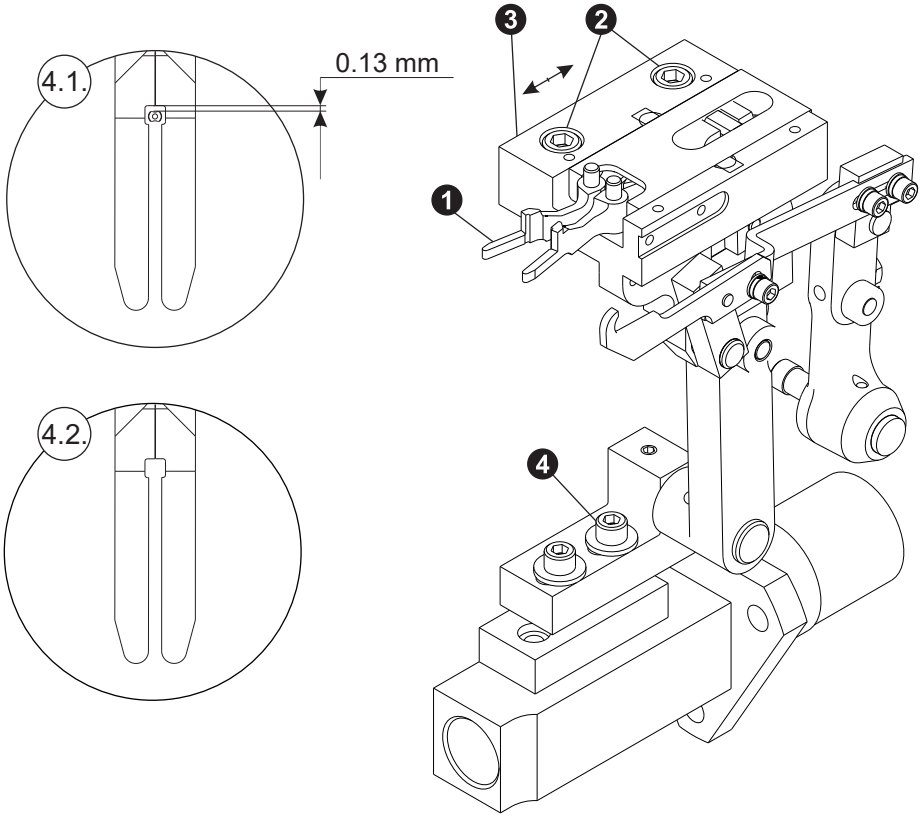

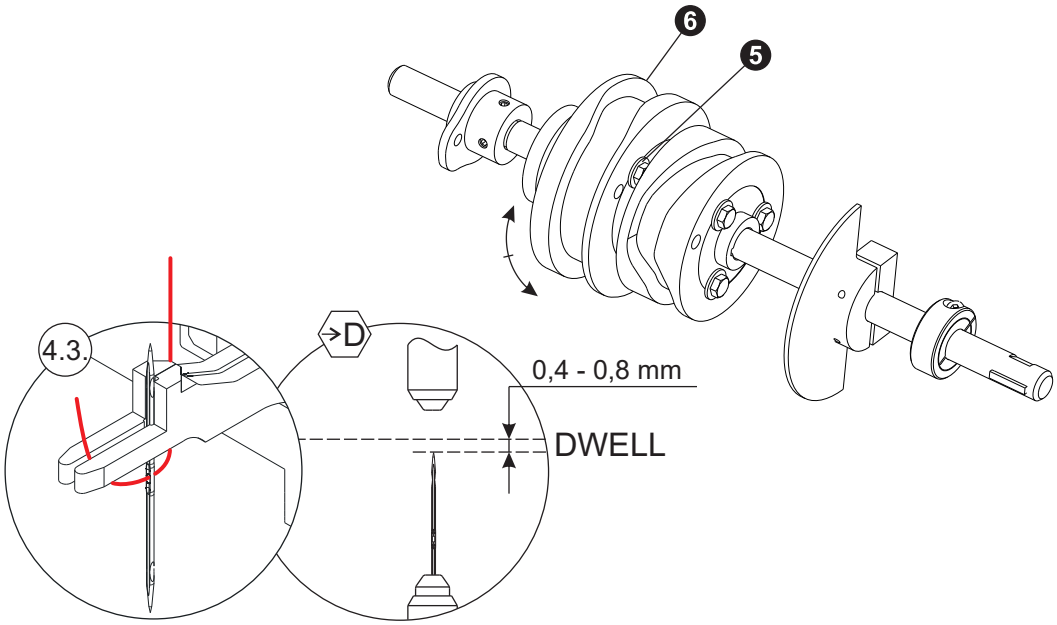

E - STANDARD MACHINE ADJUSTMENT

5. ADJUSTING LOOP SUPPORT, THREAD GUIDE, AND SEPARATOR GUIDE

5.1. Adjust the loop support

Bring the gripper fingers ❶ into the closed position.

Loosen clamping screw ❷ holding the loop support ❸ (pyramid).

Move the loop support ❸ to align its edge with the top fingers on the gripper fingers.

Bring the lower needle bar all the way up. Make sure that it clears the loop support. Tighten the screws ❷.

5.2. Adjust the thread guide

Bring the lower needle bar to hold the needle in the DWELL position.

Loosen two screws ❹ holding the thread guide.

Set the thread guide ❺ at 0,8 mm from the side of the needle.

Align the edge of the thread guide with the center of the feed dog. Tighten the screws ❹.

5.3. Adjust the separator guide

Loosen the screw ❻ holding the separator guide ❼ to the drum.

Set the separator guide so that the thread being carried by the lower looper contacts midway on the upper angle. The thread will then drop properly into the groove. Tighten the screw ❻. Perform the control of the correct setting. Turn the handwheel and check if the looper does not touch the thread separator.

Released: 04/2024
E-mail: info@amfreece-cars.cz

E - STANDARD MACHINE ADJUSTMENT

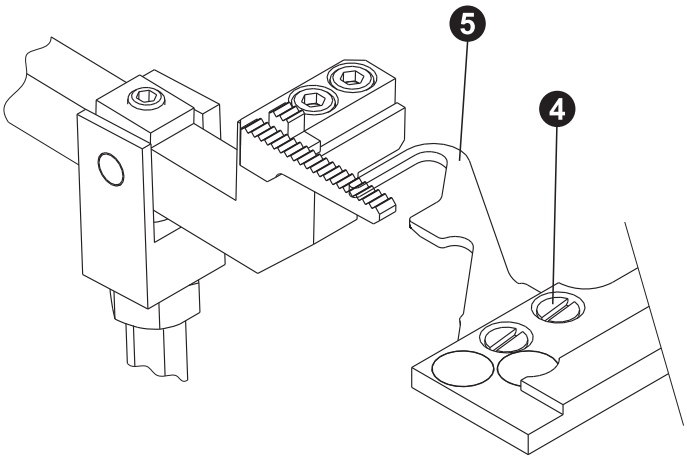

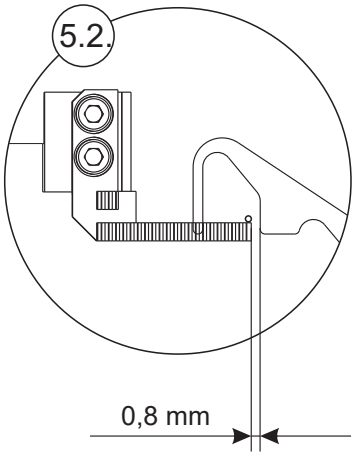

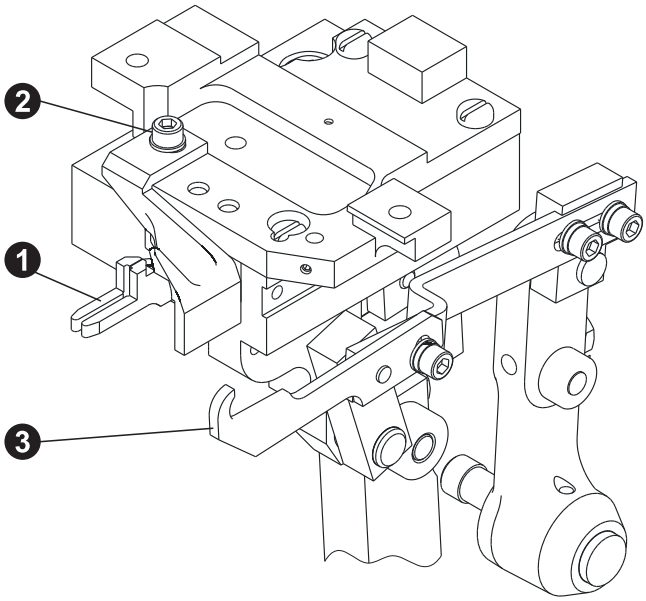

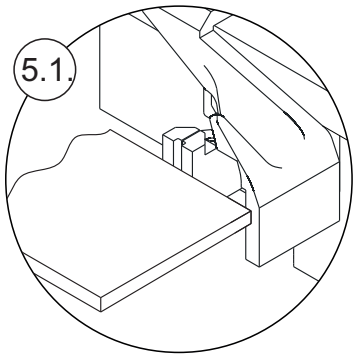

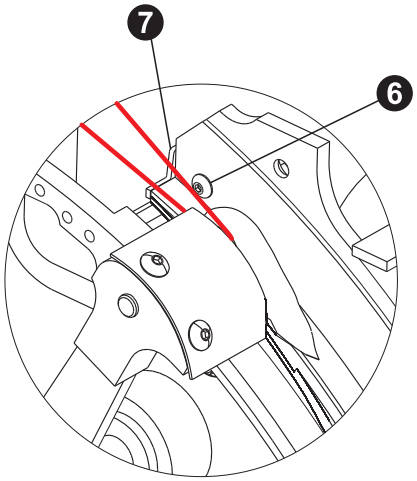

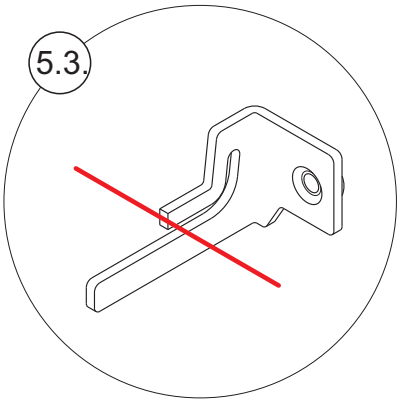

E - STANDARD MACHINE ADJUSTMENT

6. ADJUSTMENT AND TIMING OF THE THREAD LIFTER

6.1. Adjust lifter hook

Move the thread lifter to complete its upward travel.

Adjust the lifter hook ❶ to lift the thread fully into the slot of the separator guide ❷. Do not pinch the thread. Tighten the screw ❸. Check if the lifter hook ❶ is not touch by looper after adjustment. The lifter hook can not touch the looper!

7. TIMING THE THREAD BRUSH

7.1. Thread brush opening

Bring the lower needle bar to the point where the needle just starts to move from the dwell position.

Loosen two screws ❺ of the brush operating cam ❹ on the main cam shaft.

Rotate the cam to where the thread brush just starts to open. Tighten the screws ❺ the cam.

Released: 04/2024
E-mail: info@amfreece-cars.cz

E - STANDARD MACHINE ADJUSTMENT

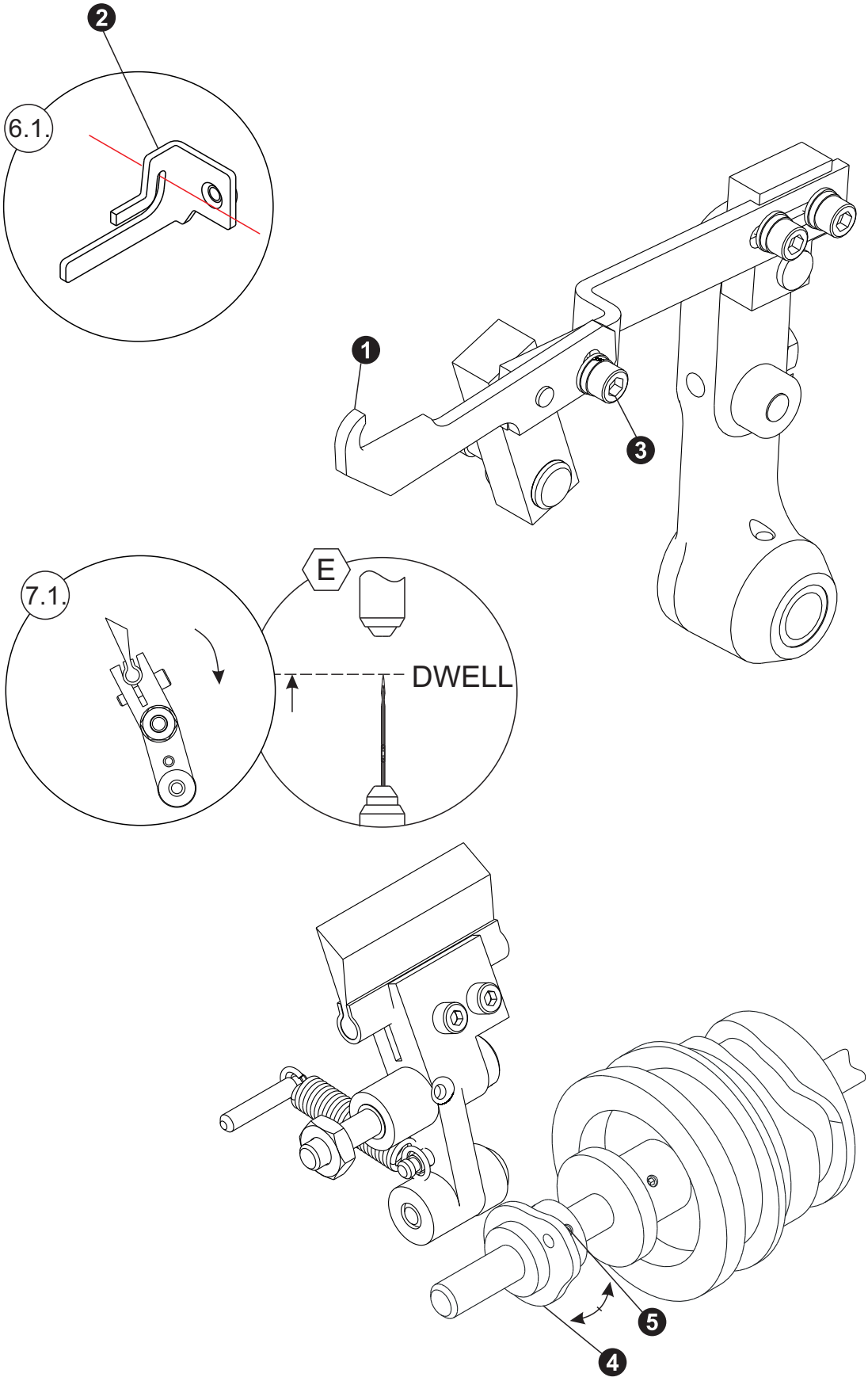

E - STANDARD MACHINE ADJUSTMENT

8. ADJUSTMENT AND TIMING OF THREAD TENSION FINGER

8.1. Set forward position

Remove both throat plates.

Bring the tension finger ❶ to its most forward position (forward operator).

Loosen the support block pivot screw ❷. Move the pivot to position the nose of finger ❶ at 4,8 to 6,4 mm from the center of the needle ❸. Tighten the screw ❷.

8.2. Timing the tension finger

Bring the lower needle bar to the point when the gripper fingers just open.

Loosen two screws ❺ holding the bevel gear ❹ on the main cam shaft.

Rotate the other bevel gear to move the tension finger to its rear position. Tighten the screws on the bevel gear.

8.3. Clearance from the needle

Remove both throat plates.

Rotate the handwheel to move the tension finger through a complete cycle.

Loosen the screw ❻ clamping the eccentric stud ❼. Rotate the eccentric stud to adjust for clearance on the return stroke between the finger and the needle 0,8 mm. Tighten the screw.

8.4. Adjust the stitch tension

First set the tension spring ❾ by one screw ❽ for no tension with the tension finger at the rear position (away from the operator).

For tighter stitches adjust for more tension on the tension spring.

NOTE: Adjust the support block up or down so that the tension finger moves through the complete cycle without any binding.

Released: 04/2024
E-mail: info@amfreece-cars.cz

E - STANDARD MACHINE ADJUSTMENT

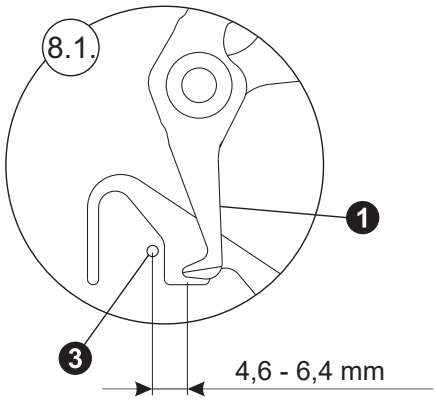

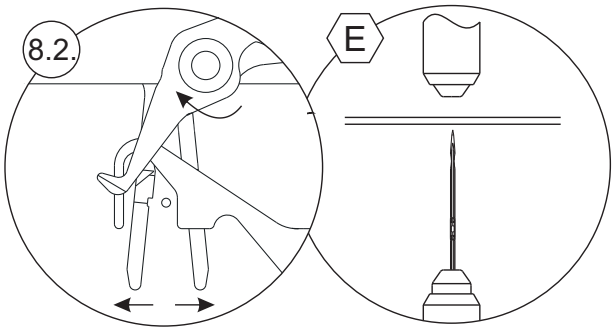

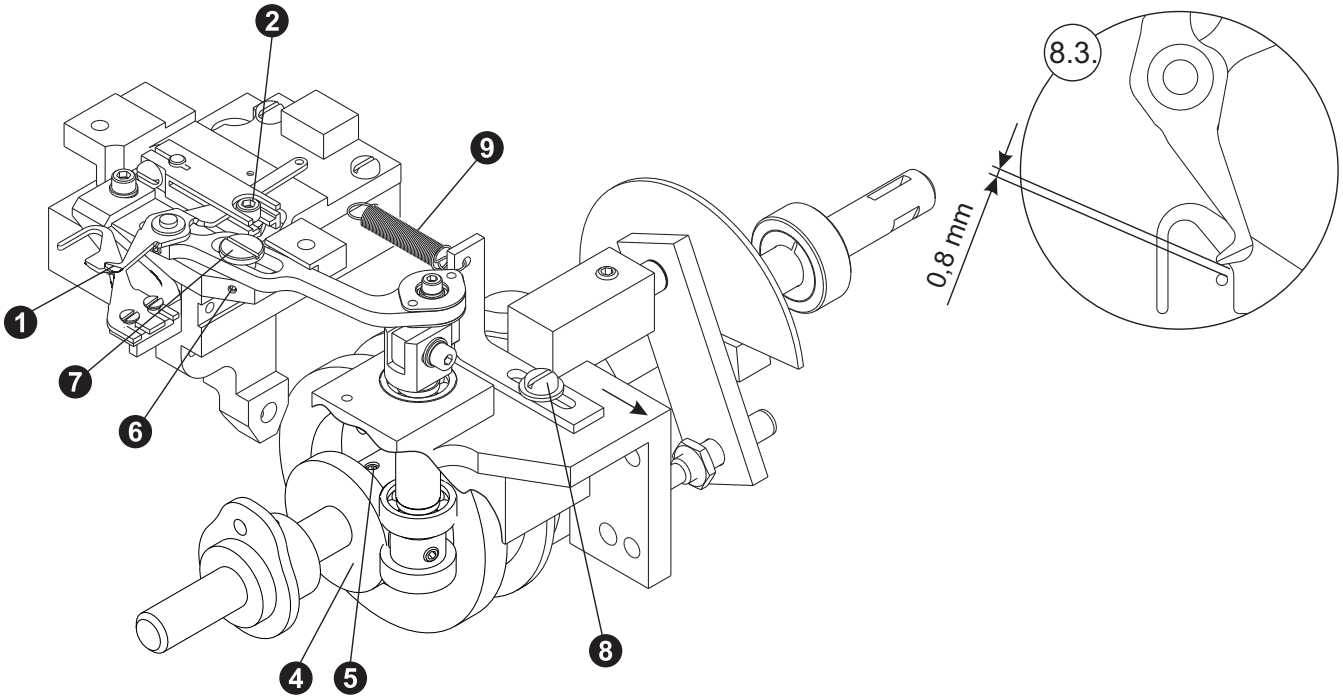

E - STANDARD MACHINE ADJUSTMENT

9. ADJUSTMENT AND TIMING OF MATERIAL FEED

9.1. Position the timing of material feed

Bring the eye of the needle flush with the throat plate.

Loosen the throat plate holder ❷, by two screws ❶, holding the throat plates ❸.

Position the throat plate so that the needle is in the centre of the circular needle hole. Make sure that the feed dog and the bender plate are free to operate. Tighten the throat plate holder making sure that it is square with the back casting.

9.2. Adjust feed dog angle

Perform this adjustment and the adjustment feed dog ❺ height at the same time.

Bring the feed dog ❺ above the throat plate ❹.

Loosen two screws ❻ on the material feed arm to adjust the feed dog.

Adjust the upper surface of the feed dog parallel with the throat plate. Tighten the screws ❻.

9.3. Adjust feed dog height

Bring the feed dog above the throat plate.

Use the lifter rod to raise or lower the feed dog. Loosen the upper jam nut. Loosen the lower jam nut (left hand thread).

Adjust the feed dog for 0,4 to 0,8 mm. Above the throat plate. Tighten the jam nuts.

9.4. Adjust feed dog timing

Bring the needle bar at 0,4 to 0,8 mm. before the needle reaches the dwell position.

Loosen the material feed cam and rotate to just bring the feed dog all the way up. Tighten the feed cam.

Released: 04/2024
E-mail: info@amfreece-cars.cz

E - STANDARD MACHINE ADJUSTMENT

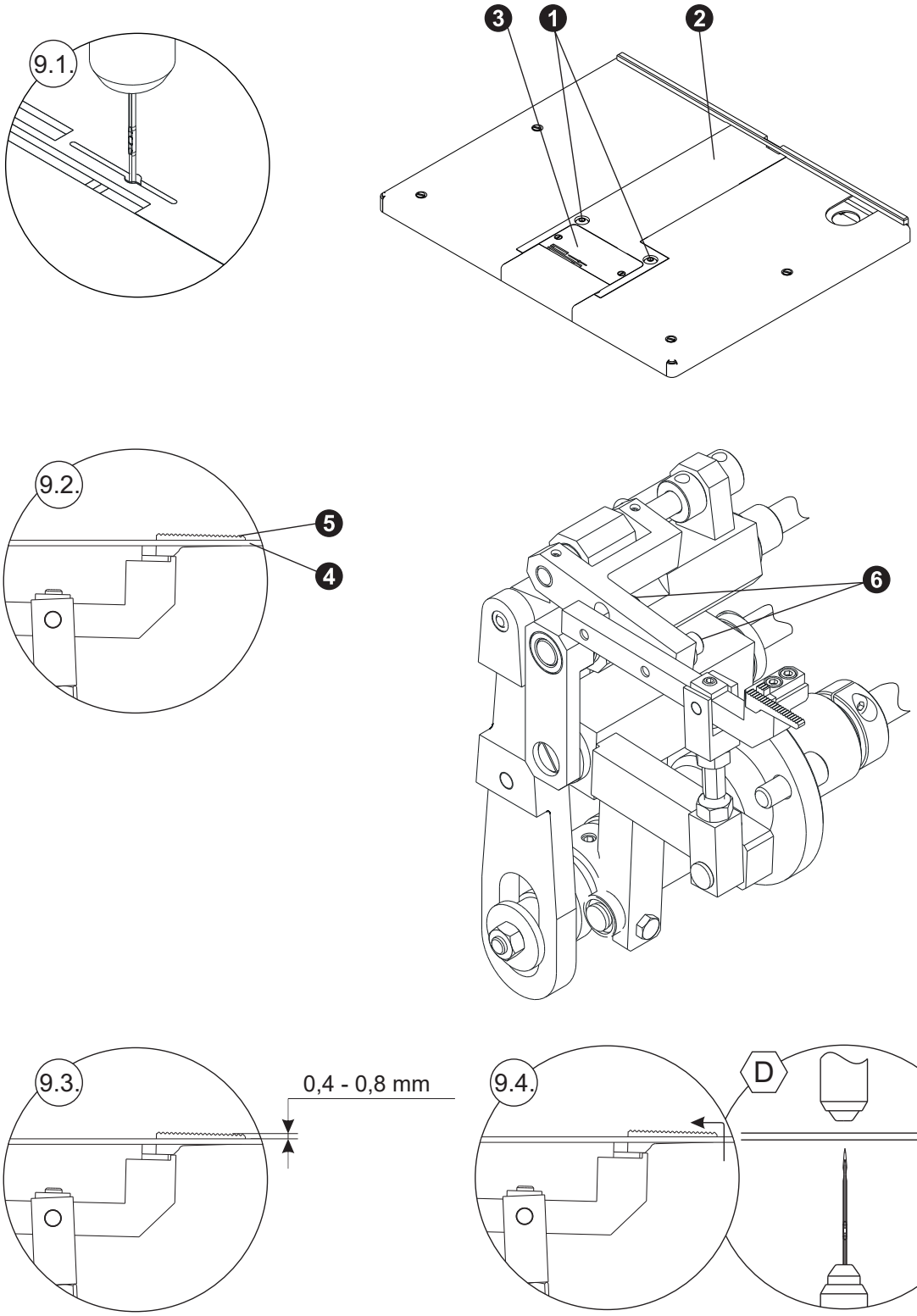

E - STANDARD MACHINE ADJUSTMENT

10. TIMING THE FOLLOWER FOOT

10.1. Adjust the follower foot separation

This adjustment requires a long arm key or an extension to a standard key. Bend the key as required for access to the gear screw.

Remove the belt guard. Unhook the cam lever spring for the upper looper.

Rotate the handwheel to bring the set on the presser foot gear into view. Loosen the set screw.

Rotate the handwheel to bring the feed dog to the end of stroke where it starts to descend. The follower foot should move upward at this time. Determine whether to advance the follower foot to move upward sooner or retard the follower foot to move later.

Rotate the handwheel to where the low section of the left upper looper cam uncovers the presser foot gear.

Hold the right cam looper gear in place. Pull the presser foot gear to disengage from the gearing. Rotate the presser foot gear clockwise to retard the follower foot or counterclockwise to advance. Push the gear ❶ in to engage the gearing. Rotate the handwheel to check the timing of the follower foot to the feed dog.

Repeat the previous two steps until the follower foot separates from the feed dog at the end of its stroke.

Rotate to bring the set screw on the presser foot gear into view and tighten the screw. Replace the upper looper cam lever spring. Replace the belt guard. Check the right looper timing.

Released: 04/2024
E-mail: info@amfreece-cars.cz

E - STANDARD MACHINE ADJUSTMENT

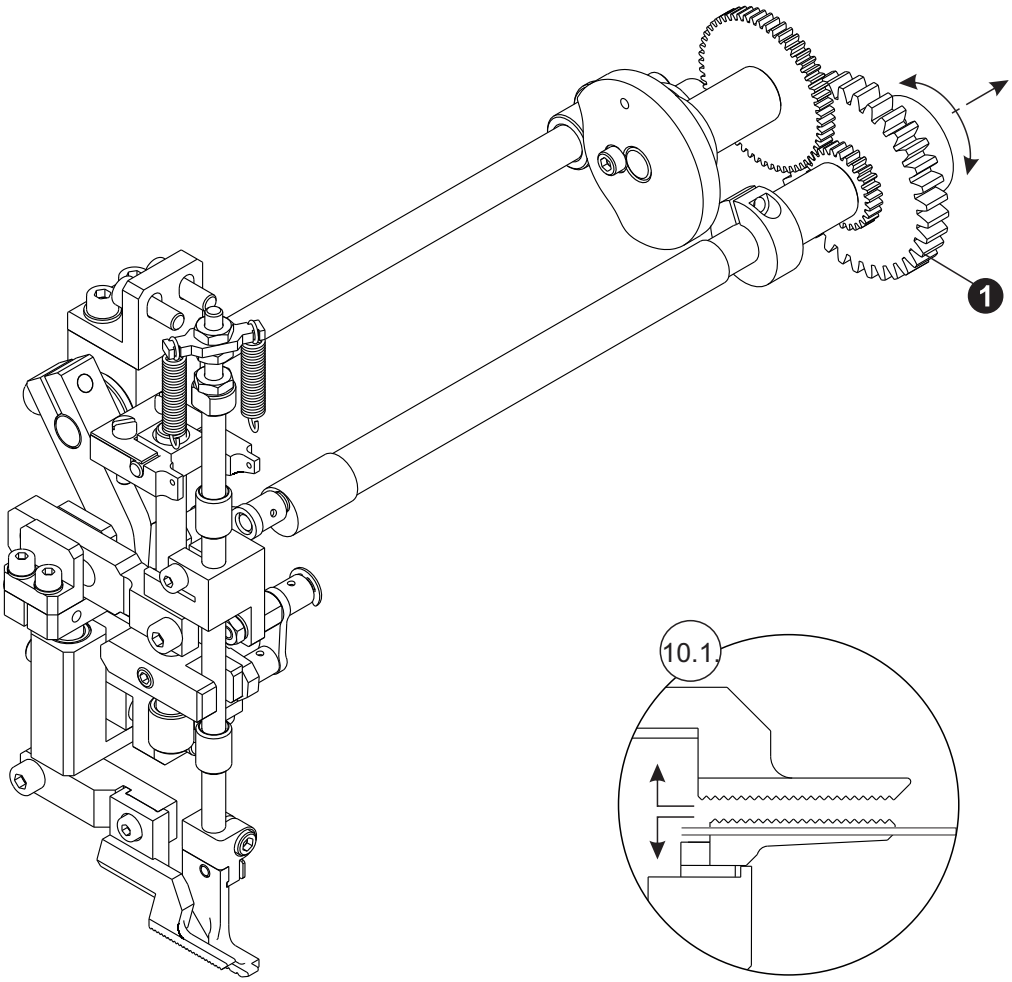

E - STANDARD MACHINE ADJUSTMENT

11. ADJUSTMENT AND TIMING, LEFT LOOPER AND RIGHT LOOPER

11.1. Left looper dwell position

Loosen two screws to remove the belt guard at the handwheel and of the machine for access to the cam lever.

Bring the upper needle bar to its maximum upward position.

Loosen the cam lever screw ❶ and locate the tip of the left looper ❷ at 4,8 mm from the needle.

11.2. Left looper clearance

Rotate the handwheel to bring the left looper alongside the needle.

Check for 0,2 - 0,8 mm clearance between the left looper and the needle. If necessary, carefully bend the looper arm to get the proper clearance.

11.3. Left looper height

Loosen the left looper arm and adjust the arm to just clear the needle bar on the return stroke. Tighten screw ❸ the arm.

Run the left looper thought its motion a few times to assure that the arm does not strike the needle bar on the return stroke.

11.4. Right looper dwell

Bring the upper needle bar to its maximum upward position.

Loosen the right looper cam lever. Move the right looper ❺ for 0,8 to 1,6 mm clearance from the upper needle bar. Tighten screw ❹ the cam lever.

11.5. Looper timing

Bring the upper needle bar just to its dwell position.

Loosen the right looper cam. Rotate the cam to advance the right looper ❺ to 0,8 mm ahead of the left looper ❷. Tighten screw ❻ the cam.

NOTE: The right looper picks up the thread ahead of the left looper.

Released: 04/2024
E-mail: info@amfreece-cars.cz

E - STANDARD MACHINE ADJUSTMENT

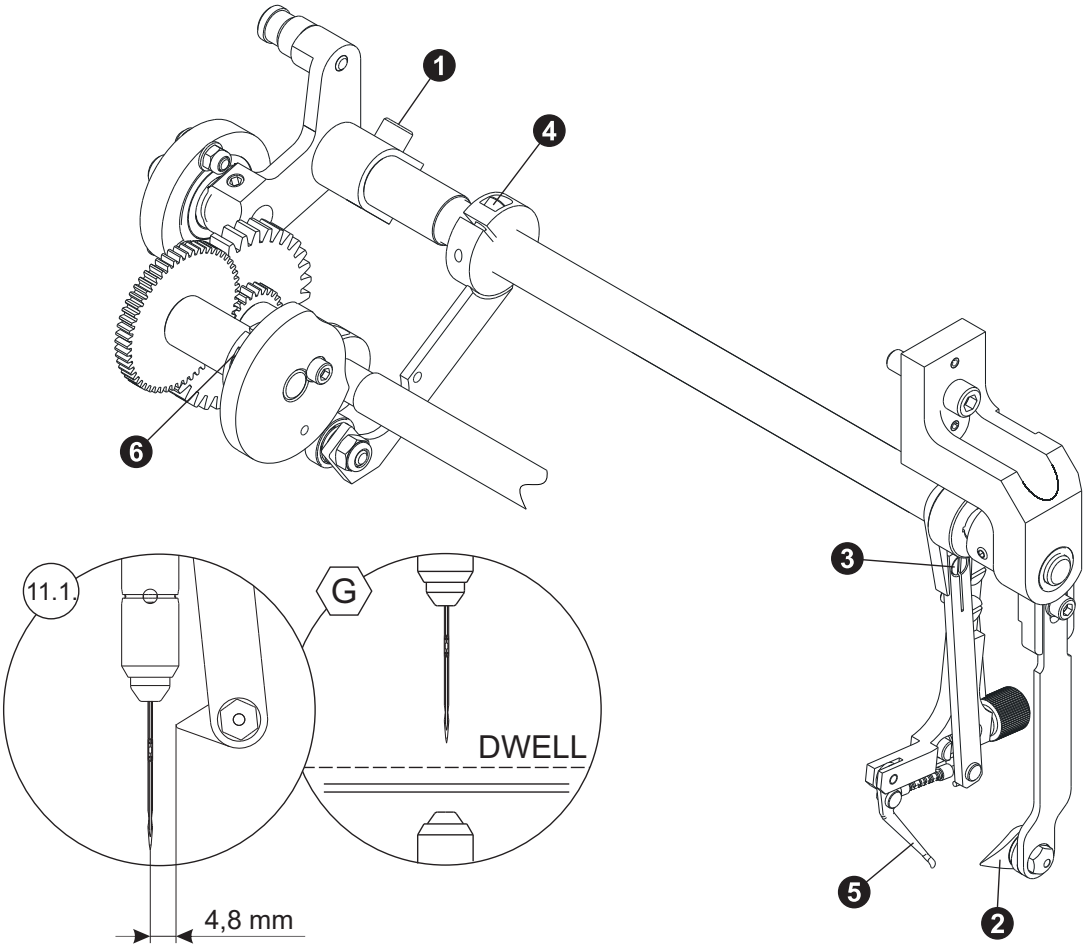

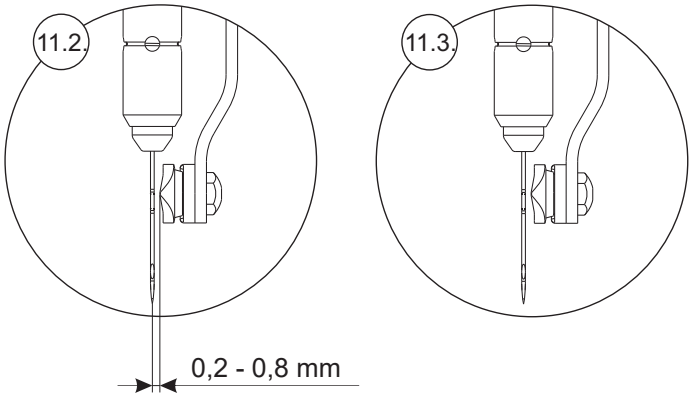

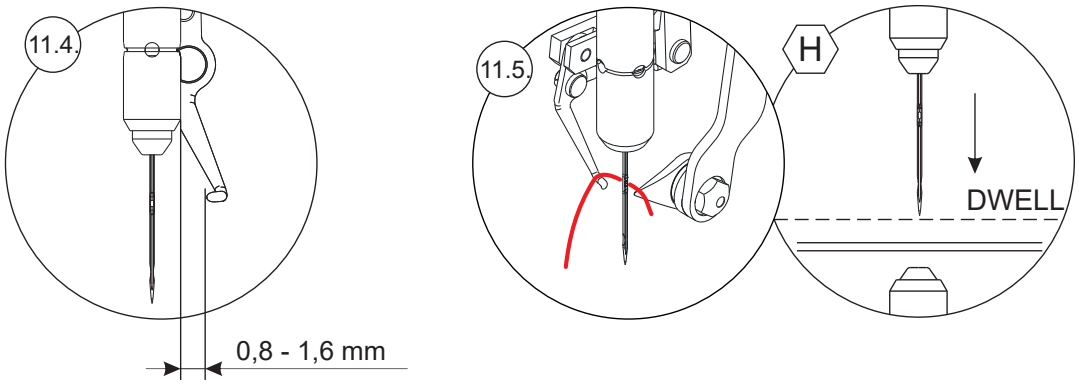

E - STANDARD MACHINE ADJUSTMENT

12. ADJUSTMENT AND TIMING OF LOWER LOOPER

12.1. Timing the drive gibs

Rotate the handwheel by hand to transfer the needle to the upper needle bar. Stop at the point that the retainer ring on the upper needle bar (moving upward) is just flush with the bottom of the needle bar bushing.

Loosen the arm ❶ crank screw ❷. Hold the arm crank assembly and move the lower looper arm out far enough to remove the arm crank.

Bellow the handwheel remove the nut holding the arm crank drive gear.

Mark the position of the material feed drive gear ❸.

Pull the arm ❶ crank drive to gear ❸ to disengage from the gearing and rotate to make the drive gibs point vertically downward. Reengage the arm crank drive gear to the gearing. Check that the material feed drive gear has not moved.

Replace the nut on the gear stud and tighten.

Install the arm crank assembly on the shaft of the lower arm and make sure that the looper arm is seated. Do not tighten. Proceed to the instructions for Timing the lever looper.

CAUTION! Whenever the arm crank drive gear is disengaged, all other timings and adjustments must be checked.

12.2. Timing the lower looper

Bring the lower needle bar to 0,4 mm before the needle reaches its dwell position. The gripper fingers should just close.

Loosen the arm crank screw ❹. Hold the drive gibs in place and rotate the bottom looper to position its tip at 1 mm from the slot in the gripper fingers. Tighten the screw ❹.

12.3. Align the lower hook tip

Bring the tip of the lower hook to the gripper fingers.

Align the tip of the hook at 2 - 3 mm below the top edge of the gripper fingers ❺ (screw at the end of looper arm). Tighten the screw.

E - STANDARD MACHINE ADJUSTMENT

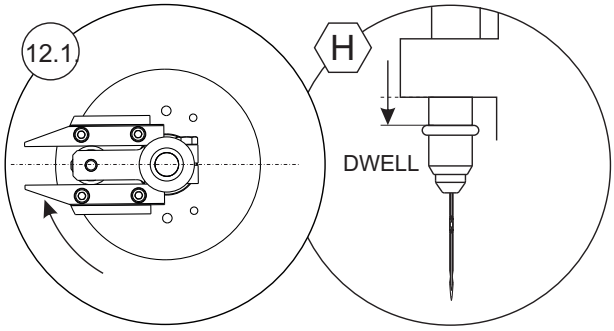

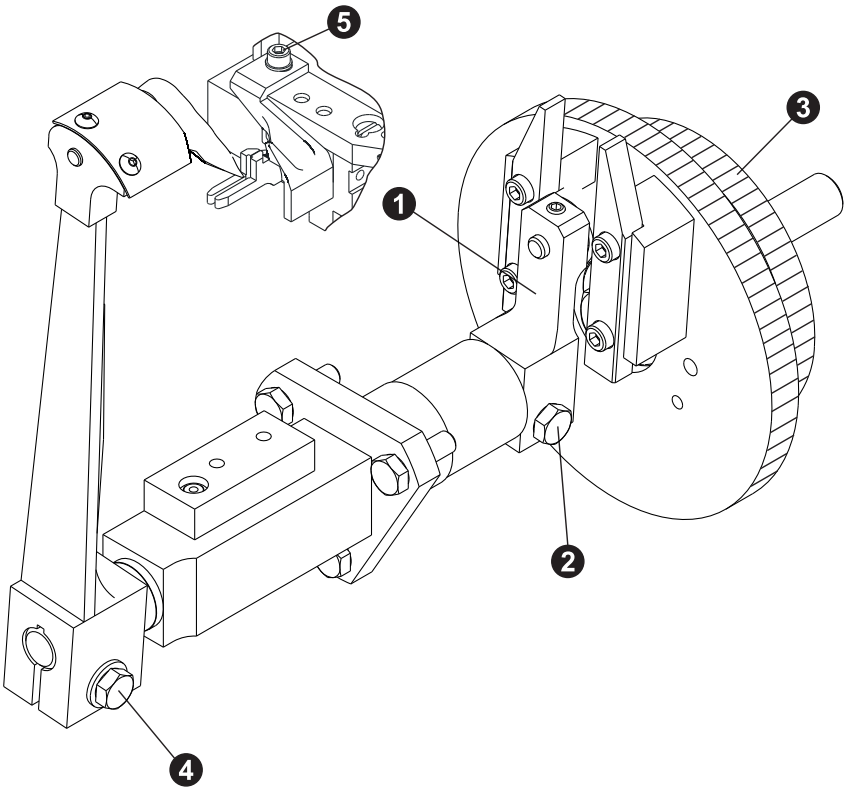

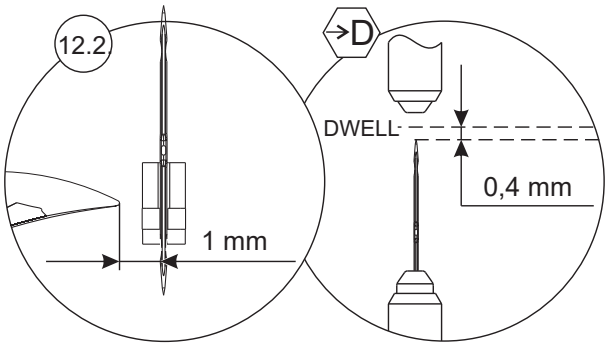

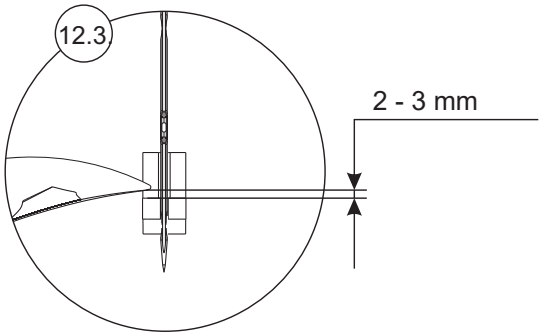

E - STANDARD MACHINE ADJUSTMENT

13. SETTING - UP PROCEDURE FOR FEED DOG SENSOR AND FLAG

Set up the gap 0,8 mm between the sensor ❶ face and flag ❷ on the cam.

Ensure 0,8 mm gap between feed dog sensor and assembly.

Pull the handwheel round by hand keeping an eye on feed dog as feed dog goes below throat plate - stop. Adjust the flag assembly next to the feed dog that the small indicator light just comes on. Tighten flag and sensor maintaining 0,8 mm gap.

14. BELT TENSION ADJUSTMENTS

Unscrew the rear cover ❻.

The V belt can be released after some time of using the machine, which may worsen the productivity. That is why its necessary to check the belt tension.

To tighten the belt ❹ fold the machine working table and loosen nuts ❸ and screws ❷.

Move the bracket down as needed and tighten the screws.

After the belt ❹ is adjusted it is necessary to adjust the belt ❶. Loosen the screws ❹ and nuts ❺, move the motor downas needed and then tighten the screws.

Check the tension by the pressure approximately 10 N above the plate. The sag of the belt should be approximately 10 mm.

To tighten the belt ❼ on the step motor loosen the screw ❽ on the step motor holder ❾ and move the holder with step motor in direction away from the machine. Tighten the screw.

Released: 04/2024
E-mail: info@amfreece-cars.cz

E - STANDARD MACHINE ADJUSTMENT

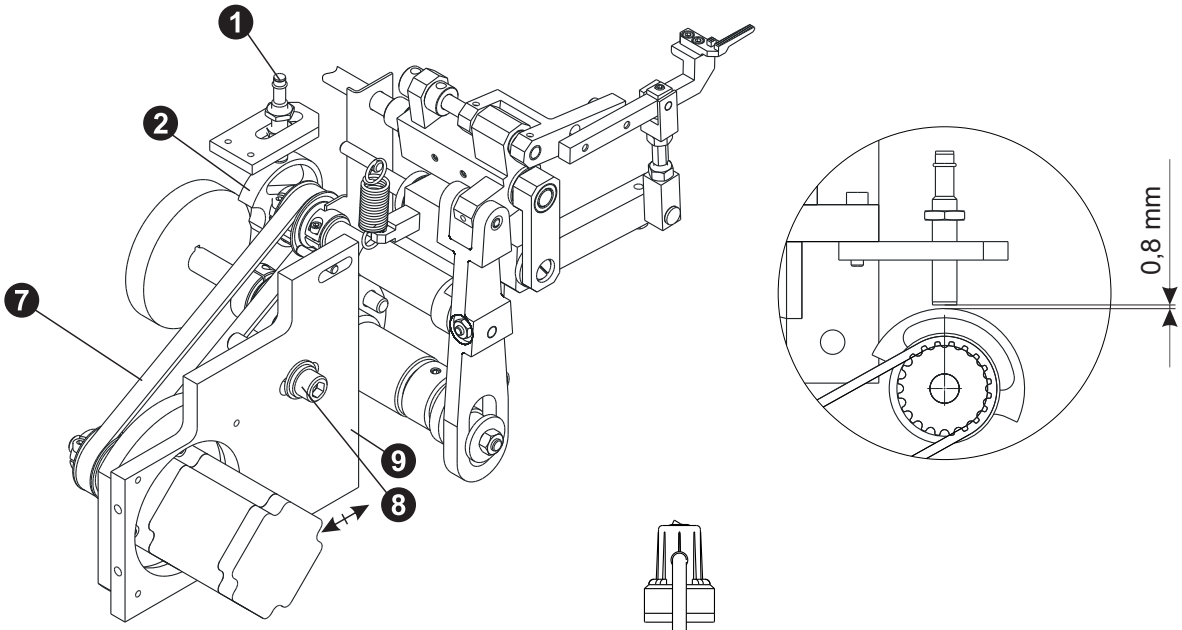

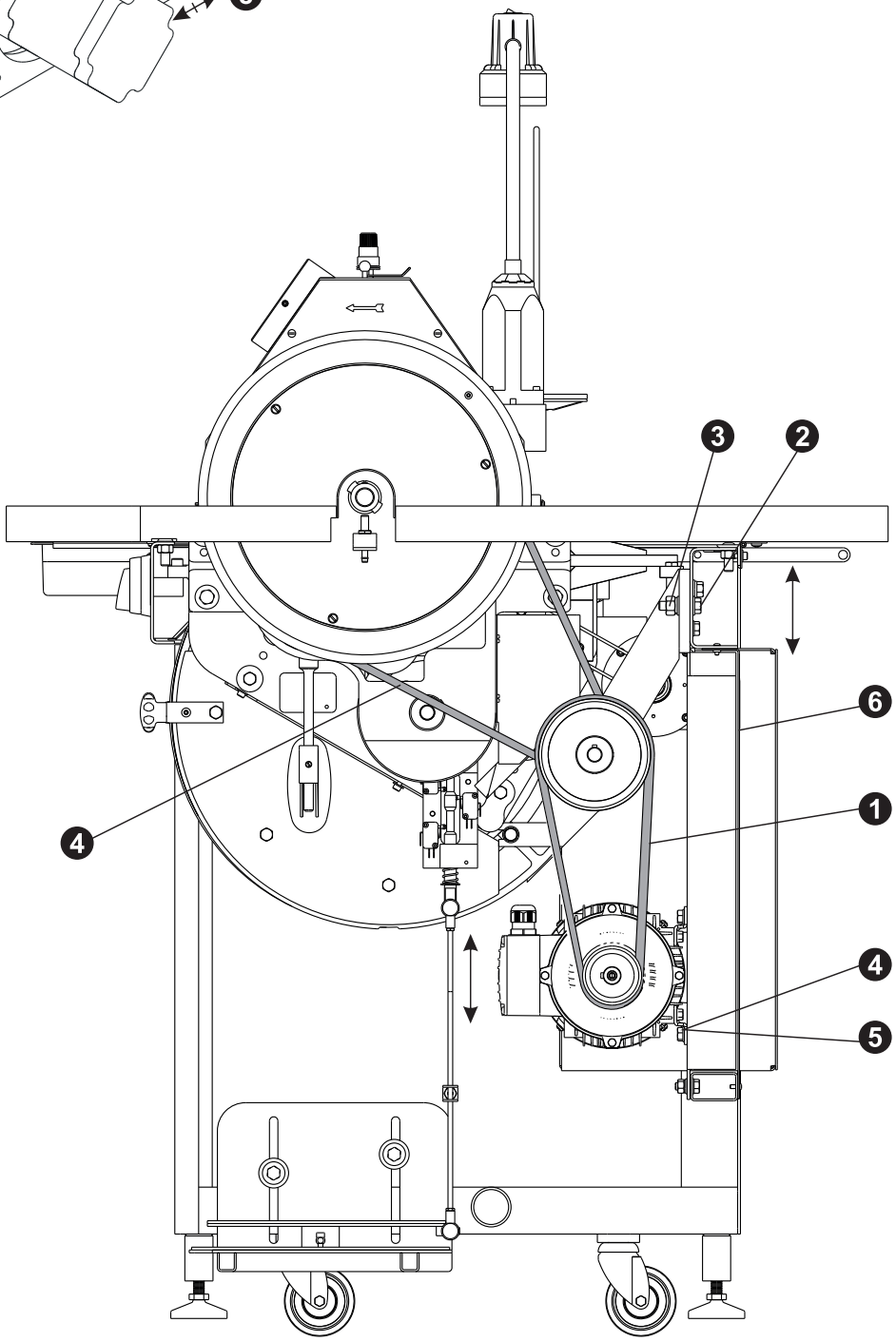

F - MACHINE MAINTENANCE

1. CLEANING AND MAINTENANCE OF THE MACHINE

1.1. It is inevitable to clean and check the needle bars as often as possible - follow this procedure:

- Switch off the machine, take out the needle.

- Loosen the screw of the needle bar guard ⓱, turn the needle bar anti-clockwise and push it out of its guard.

- Loosen the nut ⓫ with the wrench.

- Take out the securing ring ⓲ from the needle bar groove and push out the pin ⓰. Slowly take out the set from the case ❶ in upward direction. Mind the balls ❸.

- Take out the pin ❹, this releases the bar ❾ and you can push out the insert ❺.

- Remove the eventual damaged parts of the spring ❼ and needle from the piston ❻. Clean the piston ❻, check its edges and polish the possible wear. If it is not possible to clean its opening, replace the piston ❻ because it can damage the needle tip in the piston opening.

- Clean all the demounted parts, wash them with petrol, clean with the brush, and spread little oil on it. The piston ❻ in the case ❺ must move easily! Put a new spring ❼ into the piston ❻ and put it in the guide ❺. It must be pushed there easily!

- Put in the spring ❽ and push the bar ❾ into the guide - secure it with a pin ❹.

- Slide the set into the case ❶ with the bevel in backward direction, i.e., against the lock ⓬. Partially insert the balls ❸ and pull the case up to the edge of set´s bevel.

- Push in the pin ⓰ with its flat surface facing the spring ❼ and secure it with a securing ring ⓲. Mount the nut ⓫ and spring ❿. Put the needle bar into the machine and tighten the screw ⓱.

In a similar way check the lower needle bar after you have unmounted the lower looper cover. The lower looper should be on the right side.

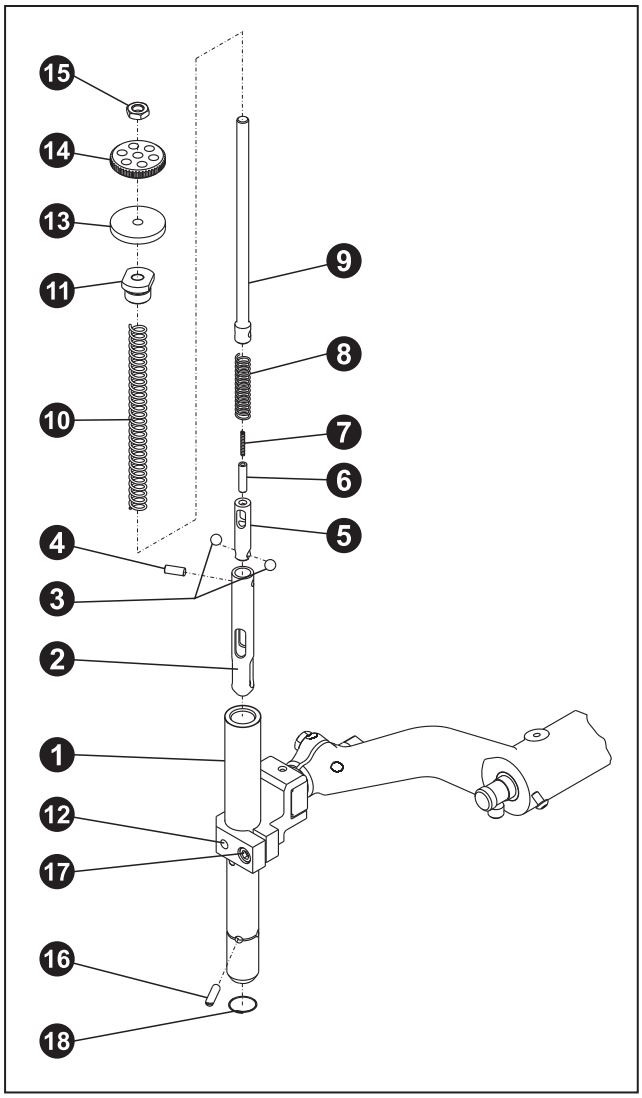

Released: 04/2024
E-mail: info@amfreece-cars.cz

F - MACHINE MAINTENANCE

2. MAINTENANCE LIST

Maintenance list		
Once a day	10 hours	Clean sewing mechanism area
		Clean frame area
		Check cutting knife edge
		Check level of condensate in regulator filter
Once a week	80 hours	Lubricate the places from chapter F 2.1.
Once a month	300 hours	Check sewing mechanism drive play
		Check filth in filter sleeves in control box
		Check tank and waste oil
		Lubricate the places from chapter F 2.1.
		Check screw joints tightness (keep values below)

Recommended values for screws freeze (Nm)			
		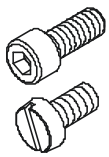	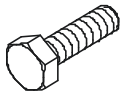
M3	0,5	0,6	0,8
M4	1,2	1,5	2,0
M5	2,5	3,0	4,0
M6	4,0	5,0	7,0
M8		8,0	16,0
M10		10,0	30,0
Recommended values for screws freeze (lbf.in)			
#4	4,4	5,3	7
#8	10	13	18
#10	22	26	35
1/4	35	44	62
5/16		71	141
3/8		88	265

F - MACHINE MAINTENANCE

2.1. Places to be Lubricated by Oil Weekly

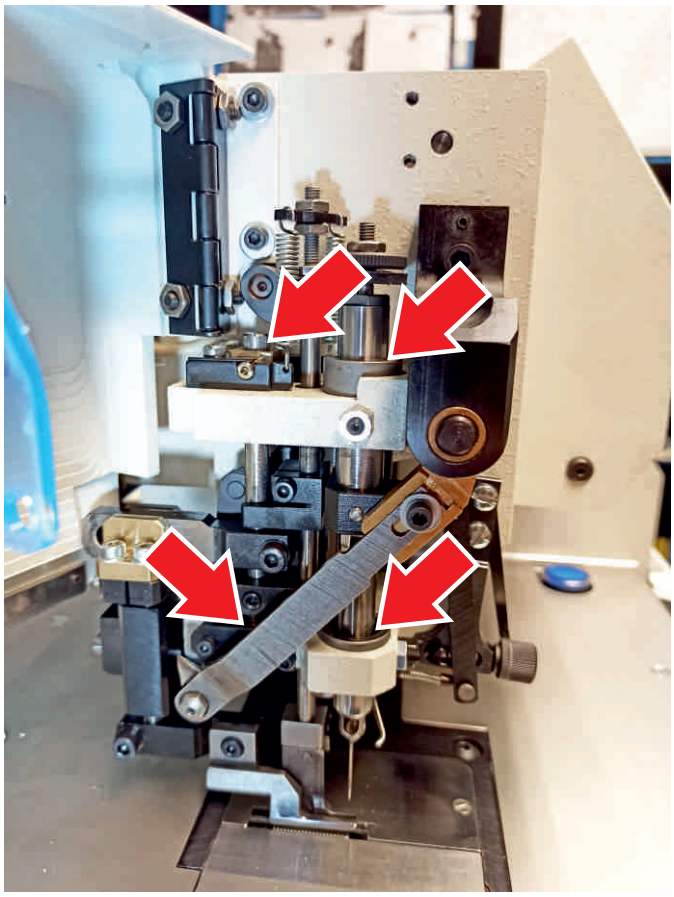

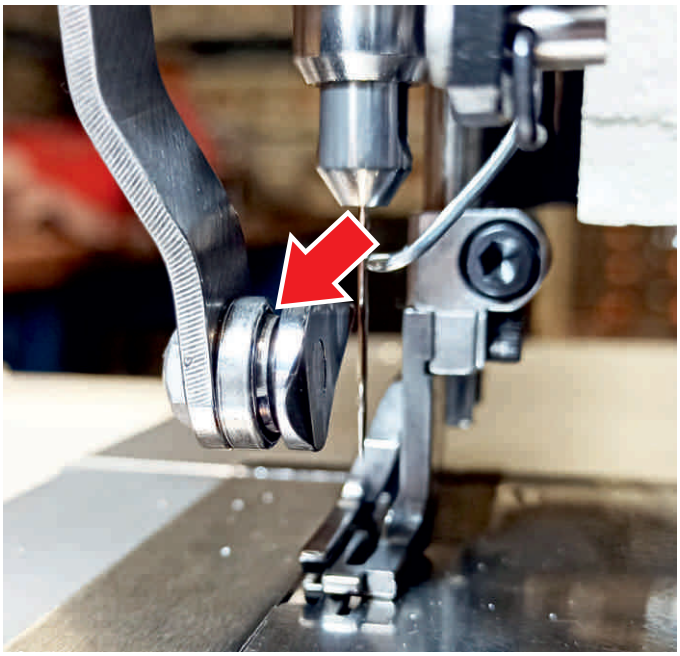

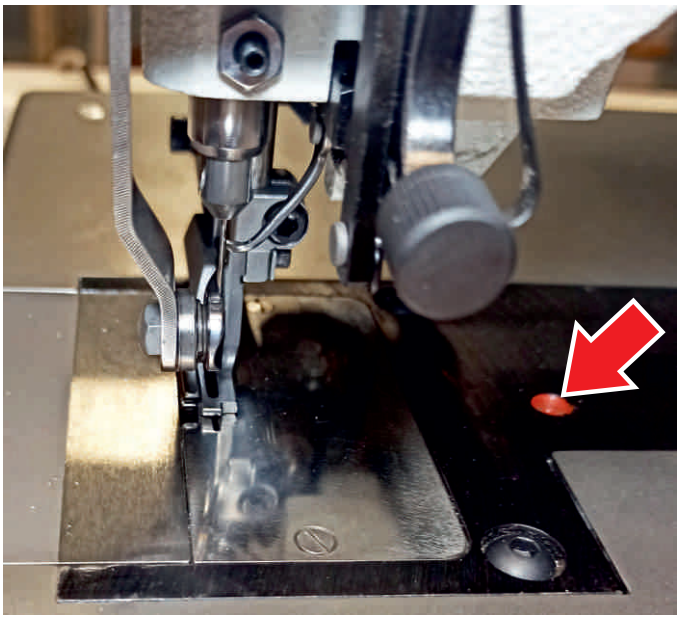

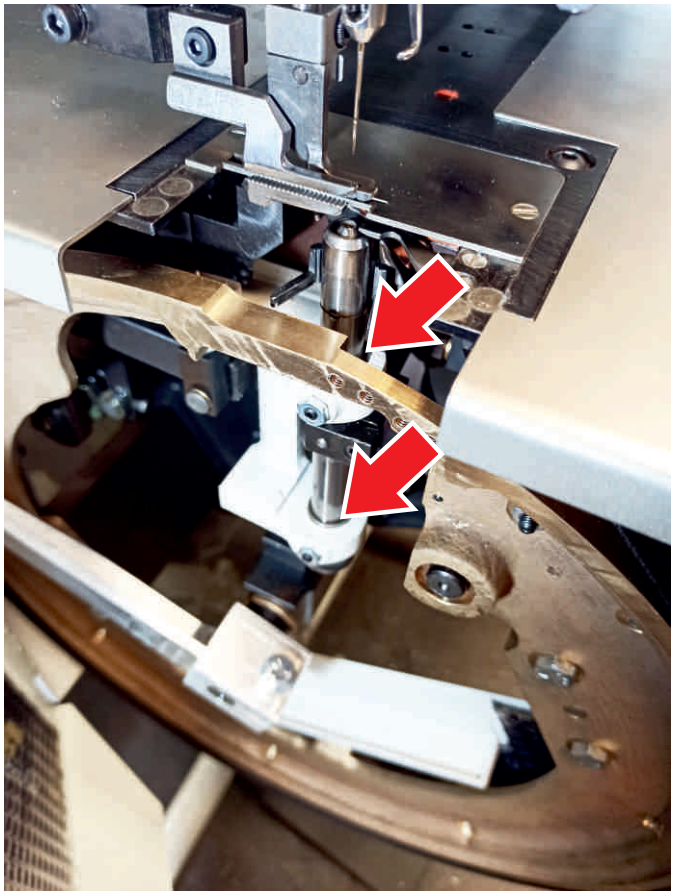

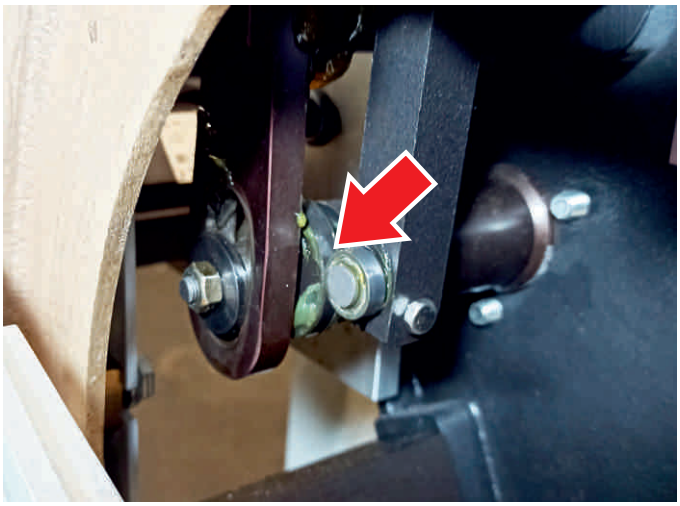

Released: 04/2024
E-mail: info@amfreece-cars.cz

F - MACHINE MAINTENANCE

3. MACHINE DISPOSAL

To ensure ecological disposal it is necessary to remove especially nonmetallic parts from the ma chine. To take these parts out, it is necessary to perform the partial dismantling of the machine, remove covers, dismantle the machine arm and remove the frame.

Aluminium and duralumin parts must be treated separately, also nonferrous metal parts and plastic parts.

G - DOCUMENTATION

1. ELECTRICAL DIAGRAM

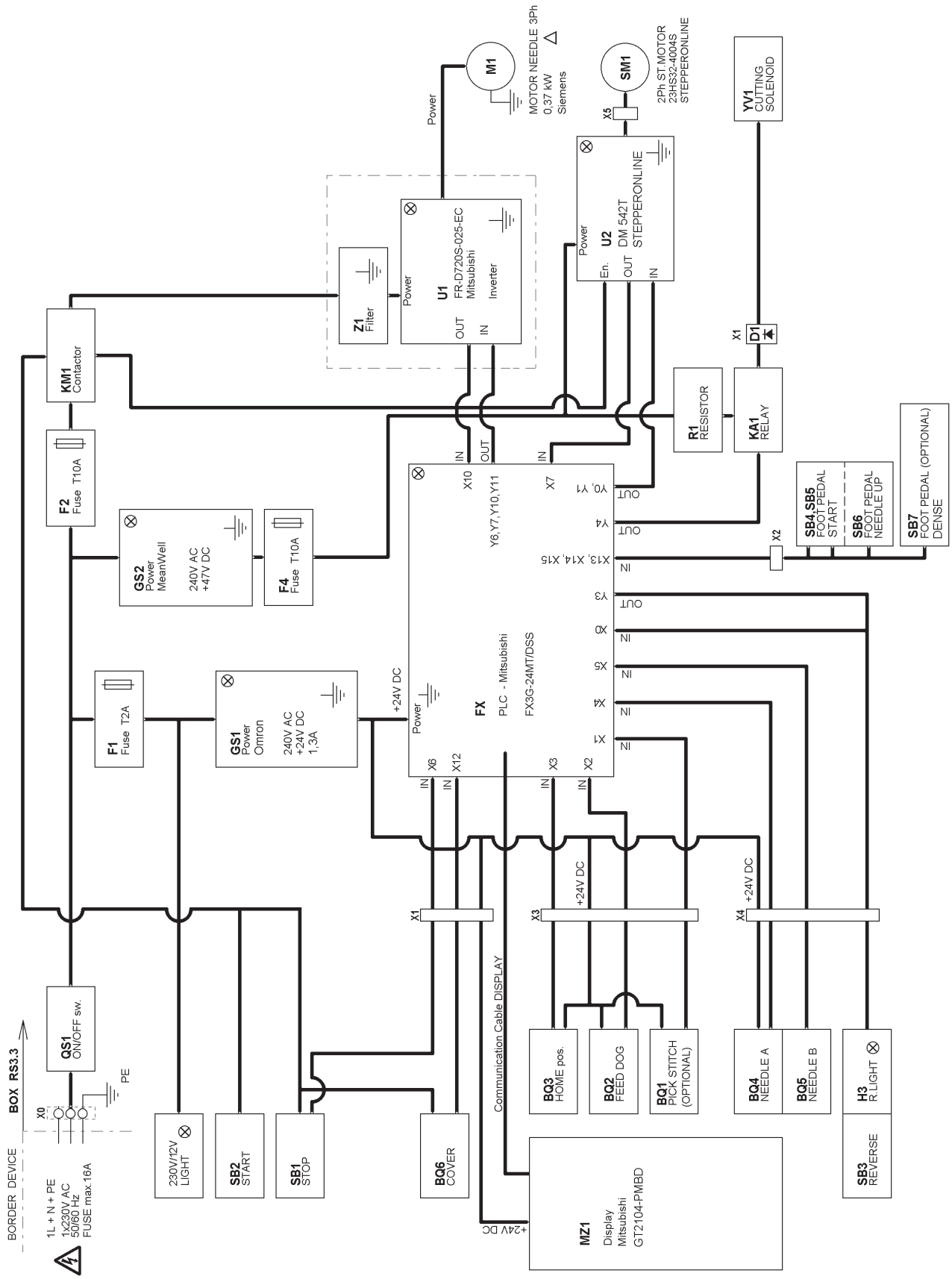

Released: 04/2024
E-mail: info@amfreece-cars.cz

TROUBLESHOOTING

TABLE OF CONTENTS

1. INTRODUCTION 2-2
2. ADJUSTMENTS QUICK REFERENCE LIST 2-2
3. FAULTS WITHOUT ERROR MESSAGES 2-3
4. THE ELECTRONIC SYSTEM ERROR MESSAGES 2-3
5. ELECTRONIC SYSTEM FAULTS 2-4
6. THE ELECTRONIC FAULTS 2-5

1. INTRODUCTION

Warning! Inspect the machine on a regular basis and use only quality parts. The manufacturer recommends using original AMF Reece parts, especially needles, loopers, and throat plates.

The Deco 3000 electronically displays error massages, when worn or damaged parts are detected. If machine problems occur and the error is not displayed, ensure correct needle installation and threading. The other troubles are eliminated according to the detailed descriptions listed.

2. ADJUSTMENTS QUICK REFERENCE LIST

NOTE: Required machine settings are variable according to the fabric and thread variation used. The type of thread and fabric will affect the amount of wear on the machine parts.

To obtain the highest quality of the sewing work maintain the following values:

The distance between the upper needle bar and the threat plate 14.3 mm.
The clearance between the lip of lower needle bar and lip on the upper needle bar 23,8 mm.
Needle clearance 0,4 to 1,2 mm.
The clearance between the needle and the end of the pads on the gripper fingers 0,13 mm.
The clearance between the fingers lever and pivot bracket must be 0,4 mm but when the fingers are closed only.
Keep the clearance between the thread guide and the side of the needle 0,8 mm.
The loopers can not catch the thread separator.
The lifter hook can not catch the looper.
The clearance of the forward end of the slot from the needle eye 0,08 to 0,13 mm.
The clearance between the feed dog above the throat plate 0,4 - 0,8 mm.
The clearance of the needle bar to the dwell position 0,8 to 0,4 mm.
The clearance of the left looper tip from the center of the needle 4,8 mm.
Clearance between the left looper and the needle 0,4 to 0,8 mm.
Clearance from the right looper to the upper needle bar 1,6 to 0,8 mm.
The clearance of right looper to the 0,8 ahead of the left looper.
The clearance between the lower looper tip and before the needle 12,7 mm.
The tip of the hook 0,8 below the top of the edge of the gripper fingers.
The bender plate clearance to the needle 0,4 mm.
Gap between the sensor face and flag on cam 0,254 mm.
The gap between feed dog sensor and flag assembly 8 mm.

Released: 04/2024
E-mail: info@amfreece-cars.cz

3. FAULTS WITHOUT ERROR MESSAGES

SYMPTOM	POSSIBLE CAUSE	PROBABLE SOLUTION
Thread breakage.	Thread draw - off is too tight.	Reduce thread tension.
	Damaged loopers or throad plate.	Replace damaged parts.
	Incorrect needle and sewing mechanism adjustment.	Correctly adjust the timing of sewing mechanism.
	Poor thread quality.	Use high quality threads only.
	Thread holes in the needle and looper are too small.	Use correct parts.
	Damaged the thread separator, worn right looper.	Replace damaged parts.
	The roller is not rotating.	Clean the roller.
The machine does not sew.	Bent or broken needle.	Roll the needle on a smooth flat surface, if bent, replace the needle.
	Damaged throad plate.	Deburr or replace the looper.
	Incorrect sewing system adjustment.	Correctly adjust.
	Incorrect thread draw-off.	Correctly adjust thread spring and timing of the thread tension finger.
Skip stitches.	Bent needle or damaged stitch forming parts.	Replace the damaged parts.
	Incorrectly adjusted sewing mechanism.	Correctly adjust the sewing mechanism.
The needle transfer does not work, needle breakage.	Spring plunge or the springs in the needle bars are worn.	Replace damaged parts.

4. THE ELECTRONIC SYSTEM ERROR MESSAGES

If the Error message ❶ appears on the screen a fault has occurred. Press button ❶.

Next a list of errors appears on the screen.
This message informs the operator what is wrong.
Repair the machine. Press button ❷. For more informations see table bellow.

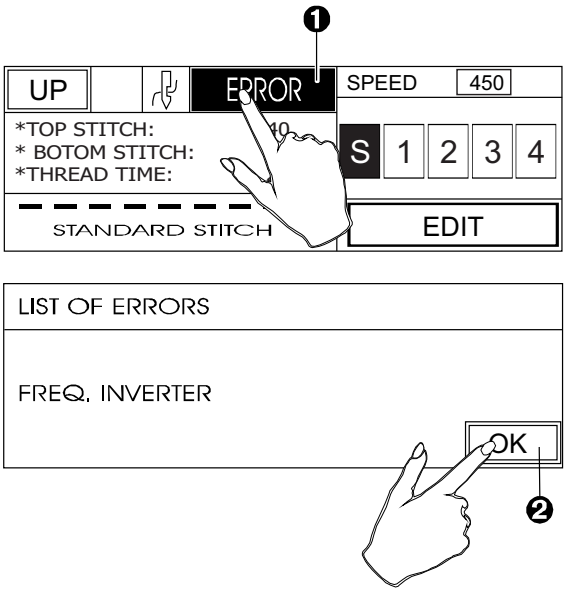

TROUBLESHOOTING

List of the error messages, possible cause, probable solution:

Error messages	Cause	Solution
COVER	The drum cover is open. (Part number: 41831082)	Close the drum cover and tighten the locking screw. Press the button OK.
FREQ. INVENTER	The machine is stopped by STOP button.	Press the START button.
STEPPERMOTOR	Broken stepper motor driver.	Turn off the machine at last 1 minute. If the display is switched on again after an error, check the stepper motor driver and power supply.
	Step motor does not reach the base position.	Check movements in respective axis manually. Check step motor and driver. Check home sensor.
SET NUMBER IS INCORRECT	Set parameter is incorrect.	Press the arrow on the display and select the parameters in correct range.

5. ELECTRONIC SYSTEM FAULTS - FUSE DESCRIPTION

FUSE TYPE	INSURED PART	FAULT
F 1 - T2A, 12.0008.4.665	Work light.	The light does not operate.
	The source GS 1 primary part.	The LED on GS 1 is not light. The LED on PLC is not light. The display is not light.
F2 - T 10A, 12.0008.4.664	Frequency inventer U 1.	Frequency inventer faults.
F 4 - T 10 A, 120008.4.664	The source GS 2 secondary part.	Step motor faults.

Released: 04/2024
E-mail: info@amfreece-cars.cz

6. THE ELECTRONIC FAULTS

SYMPTOM	POSSIBLE CAUSE	PROBABLE SOLUTION
After the machine is switched on, the display is not light.	No power supply.	Check main power supply or voltage in the socket.
	Power switch QS 1 is damaged.	Replace the switch 12.0010.4.200.
	Fuse F 1 failure (the LED on the power supply GS1 does not light).	Replace the fuse 12.0008.4.665.
	Faulty display.	Replace the display 70.8001.1.014.
After the Start button is pressed the machine does not start operating.	Contactor KM 1 does not switch on.	Check the contactor KM circuits, it means button SB2 Start, SB1 Stop, Control press pushbutton start (SB2) or stop (SB1) Cover BQ6, or replace the contactor 12.0008.4.833.
Sewing motor is not turning.	Fuse F2 failure.	Replace the fuse 12.0008.4.664.
	Faulty driver motor.	Check the or replace the driver motor U1 - 70.8001.1.002.
	Faulty sewing motor.	Replace motor M 1 - 12.0008.4.757.
Step motor is not moving.	F4 failure. Power led driver U2 no light.	Replace fuse F4 - 12.0008.4.664.
	Sensor BQ2 failure.	Test sensor BQ2, replace sensor 12.0010.4.025
	Faulty driver U2.	Replace driver 12.0010.4.500.
	Faulty step motor.	Replace motor 06.7000.0.022.
Cutting threads is not work.	Faulty relay KA 1.	Replace relay 12.0008.4.483.
	Faulty cutting solenoid.	Replace solenoid 70.4165.1.129.

TABLE OF CONTENTS

MAIN FRAME 3-2
CAM AND GEARS 3-8
LOWER NEEDLE BAR 3-10
NEEDLE BAR SIZE 38 3-12
PRESSER FOOT 3-14
LOWER LOOPER AND THREAD DRUM 3-18
MAIN CAM HAFT 3-22
THREAD GRIPPER ELEVATOR 3-24
TENSION FINGER 3-26
MATERIAL FEED 3-28
UPPER LOOPER 3-32
WORK PLATE 3-34
LIGHT 3-36
MATERIAL GAUGE 3-38
FRONT COVER + THREAD TRIM 3-40
FOOT SWITCH 3-42
ELECTRICAL - I 3-44
ELECTRICAL - II 3-46
ACCESSORIES 3-48
EXTRA PARTS - FOOT SWITCH ASSEMBLY 3-50
EXTRA PARTS - CONDENSED STITCH KIT 3-52
ELECTRICAL DIAGRAM 3-54

MAIN FRAME

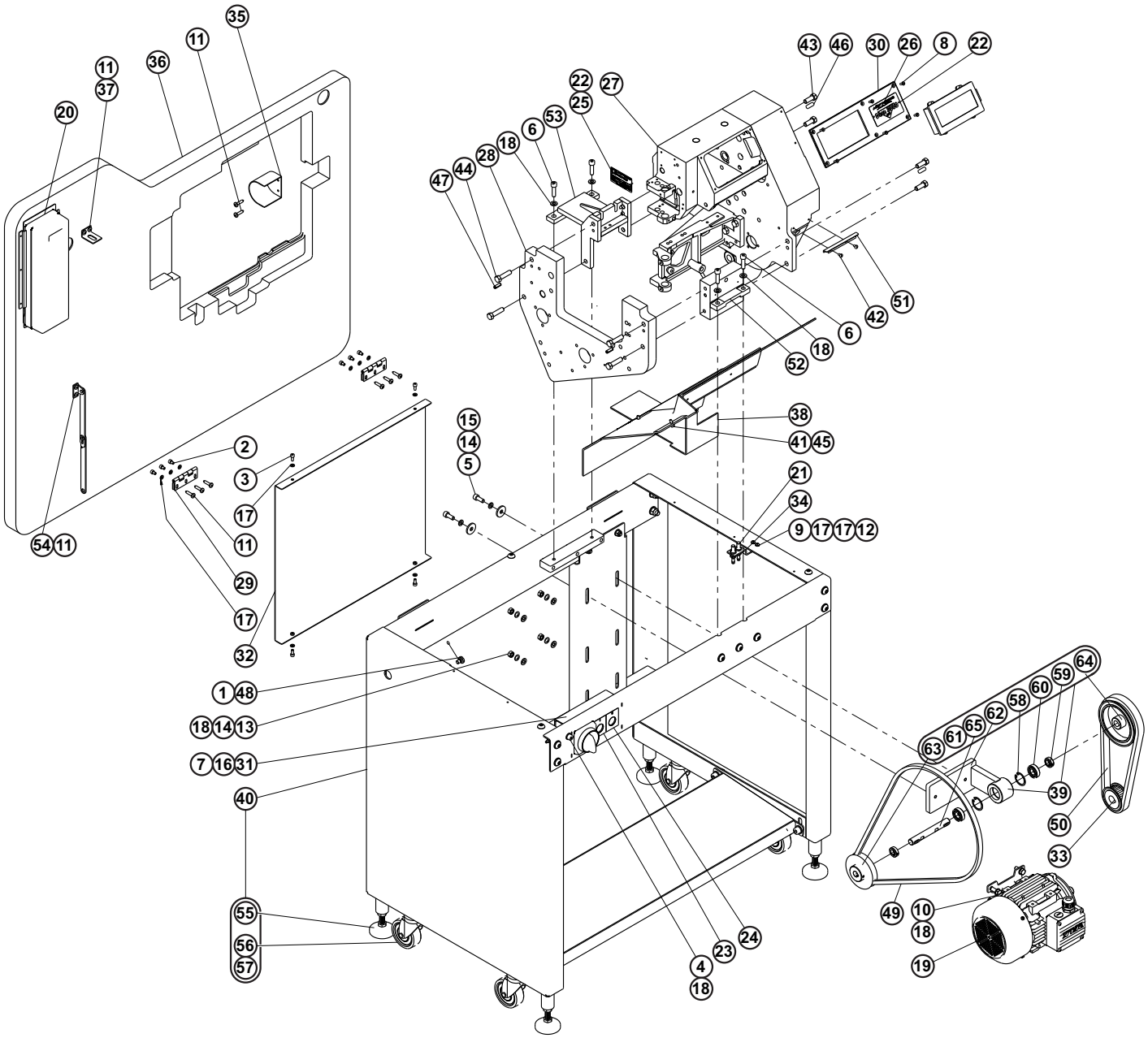

Released: 04/2024
E-mail: info@amfreece-cars.cz

MAIN FRAME

DET	PART NUMBER	DESCRIPTION	QTY.
1	01.3549.0.000	NUT #5/16-18	1
2	08.6002.5.008	SCREW M5-8	6
3	08.6002.5.012	SCREW M5-12	4
4	08.6002.8.010	SCREW M8-10	1
5	08.6002.8.020	SCREW M8-20	2
6	08.6002.8.030	SCREW M8-30	4
7	08.6032.4.008	SCREW M4-8	2
8	08.6102.4.012	SCREW M4-12	6
9	08.6202.5.016	SCREW M5-16	2
10	08.6312.8.020	SCREW M8-20	4
11	08.6663.5.025	SCREW 4,8-25	12
12	08.6702.5.000	NUT M5	2
13	08.6702.8.000	NUT M8	4
14	08.6802.8.000	SPRING WASHER M8	6
15	08.6817.8.000	WASHER 9	2
16	08.6832.4.000	WASHER M4	2
17	08.6852.5.000	WASHER 5,3	14
18	08.6852.8.000	WASHER M8	13
19	12.0008.4.757	MOTOR 1A801-6 B3 0,37kW 230/400V	1
20	12.0008.6.901	BOX	1
21	12.0010.4.025	SENSOR	2
22	12.1016.0.002	NAIL 1.86x6.35 (1/4) BN 896	4
23	12.8000.0.034	LABEL START	1
24	12.8000.0.035	LABEL STOP	1
25	12.8000.1.081	LABEL CE DECO 3000	1
26	12.8000.1.084	LABEL DECO 3000 ATT	1
27	70.0001.0.000	HEAD DECO 3000	1
28	70.0005.0.700	TIE FRAME	1
29	70.0067.0.000	HINGE HHSY75	2
30	70.0071.0.800	PLATE	1
31	70.0074.0.800	COVER	1
32	70.0110.0.800	COVER	1
33	70.3162.5.003	PULLEY	1
34	70.3165.2.002	SENSOR HOLDER	1
35	70.3265.2.016	COVER	1
36	70.3535.1.181	TABLE PLATE	1
37	70.3535.1.182	HOLDER	1
38	70.3577.7.042	COVER	1
39	70.9029.0.050	PULLEY - ASSEMBLY	1
40	70.9030.0.050	MAINFRAME DECO 3000	1

MAIN FRAME

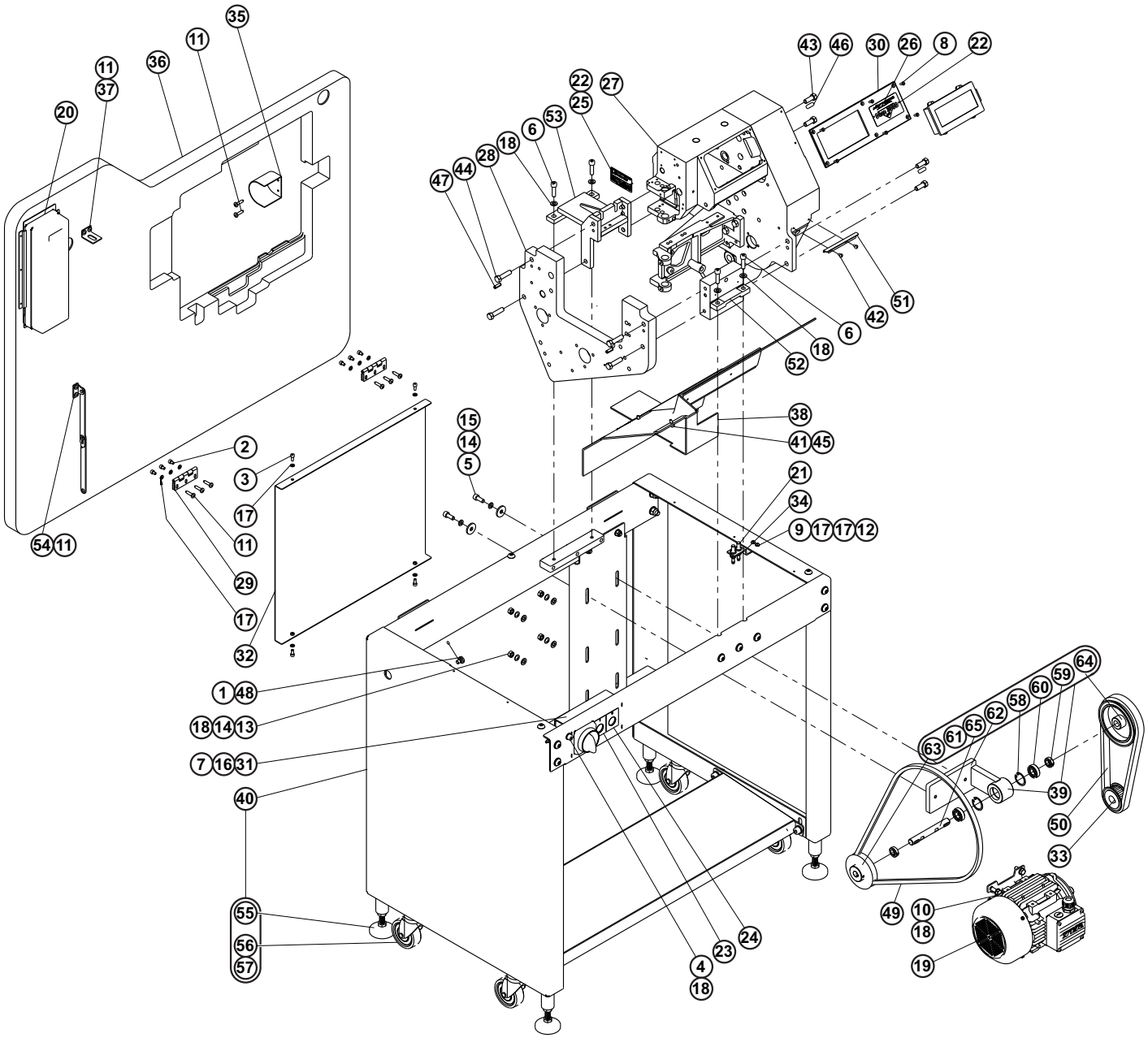

Released: 04/2024
E-mail: info@amfreece-cars.cz

MAIN FRAME

DET	PART NUMBER	DESCRIPTION	QTY.
41	1000025	SCREW #10-32 x 1/2	2
42	4100052	SCREW #8-32x1/4	2
43	4200003	SCREW 3/8-16x25.4	4
44	4200004	SCREW 3/8-16x1 1 1/2	4
45	7012001	WASHER FLAT	2
46	8000056	PIN #5/16 x 3/4	2
47	8002036	PIN #1/4 x 3/4	2
48	22911038	JERGENS SCREW LOCK	1
49	24323130	BELT 13X1320 Li	1
50	24383030	BELT 285 L075	1
51	34268125	ANGLE FILLER 2	1
52	35371003	TIE FRAME FRONT SPACER	1
53	35472011	THE FRAME REAR SPACER	1
54	41441060	TABLE SUPPORT	1
55	12.0010.6.241	SHOCK MOUNT	4
56	12.0008.6.520	ROLLER	4
57	08.6000.0.025	SCREW M10-25	4
58	12.1040.1.007	RETAINING RING 32	2
59	12.1050.0.014	RING 15 SCCN15-8 (MISUMI)	2
60	12.2010.0.021	BEARING 6002ZZ SKF	2
61	12.4030.0.518	KEY 5e9x5x18 CSN 02 2562	2
62	70.0073.0.000	HOLDER	1
63	70.0114.0.500	PULLEY V-BELT	1
64	70.0115.0.500	PULLEY	1
65	70.0116.0.300	SHAFT	1

CAM AND GEARS

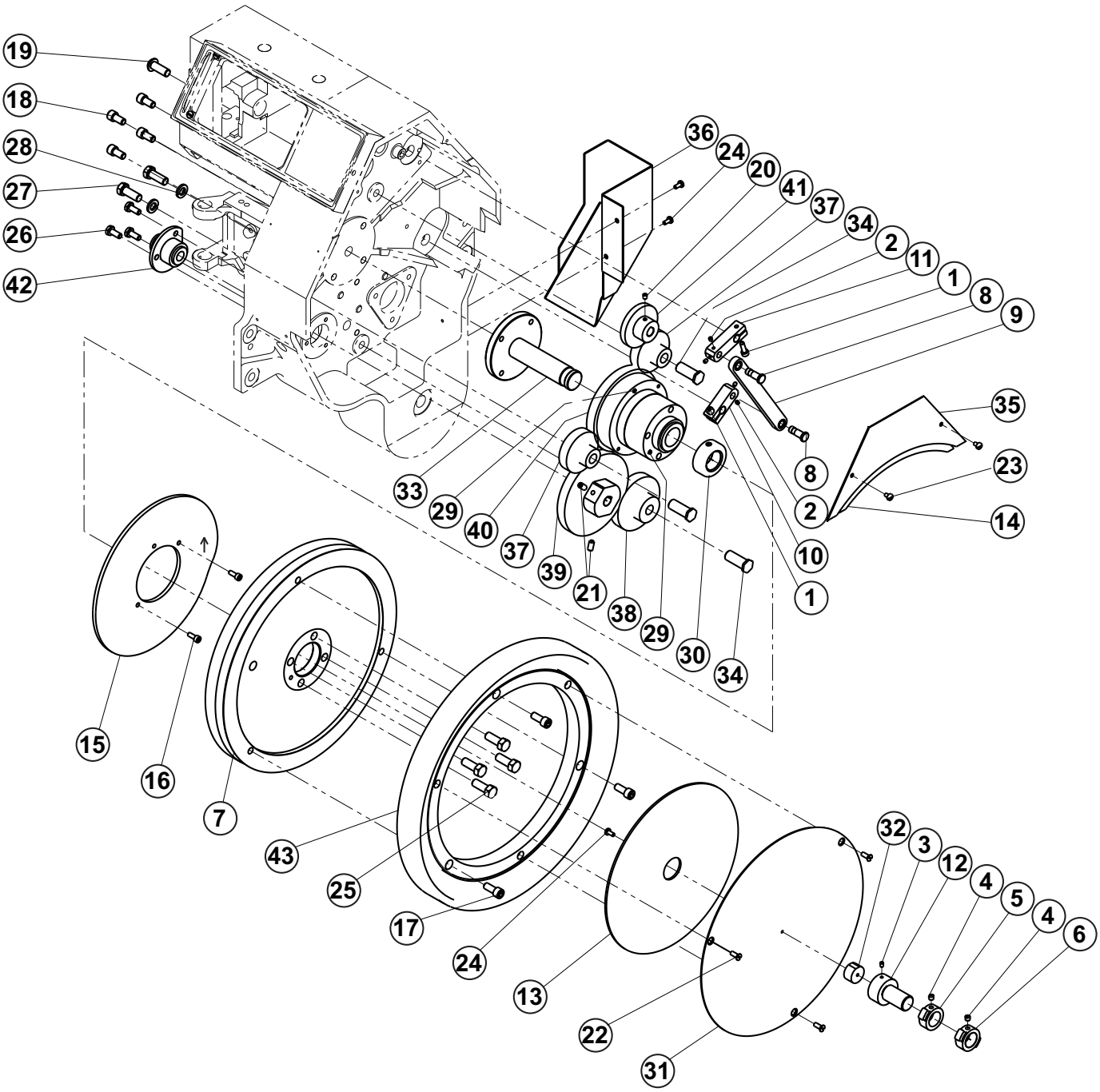

Released: 04/2024
E-mail: info@amfreece-cars.cz

CAM AND GEARS

DET	PART NUMBER	DESCRIPTION	QTY.
1	08.6000.5.016	SCREW M5-16	2
2	08.6400.4.005	SCREW M4-5	4
3	08.6400.4.006	SCREW M4-6	1
4	17.0011.2.013	SCREW M6x0,75-6	2
5	19.0044.1.624	RING SENSOR	1
6	19.0044.1.625	RING SENSOR II.	1
7	70.0010.0.400	NEEDLE BAR CAM	1
8	70.0017.0.300	STUD	2
9	70.0028.0.600	LINK	1
10	70.0031.0.600	LEVER - LOWER	1
11	70.0032.0.600	LEVER - UPPER	1
12	70.3165.2.003	ADAPTOR	1
13	70.3271.1.023	SOUND ISOLATION	1
14	70.3271.1.024	SOUND ISOLATION	1
15	70.3651.3.048	LEFT UPPER LOOPER CAM	1
16	1000025	SCREW #10-32 x 1/2	2
17	1000039	SCREW #5/16-18 x 3/4	3
18	1000099	SCREW 5/16-18x5/8	4
19	1200083	SCREW #3/8-24 x 1	1
20	3100012	SCREW #10-32x1/4	1
21	3200023	SCREW #1/4-20 x 1/2	2
22	4000020	SCREW #10-32 x 1/2	3
23	4100052	SCREW #8-32x1/4	2
24	4100054	SCREW #8-32x9.5	3
25	4200003	SCREW 3/8-16x25.4	4
26	4200013	SCREW #1/4-20 x 5/8	3
27	4200267	SCREW #3/8-24 x 1	2
28	7100009	WASHER #3/8 SPRING LOCK	2
29	8200031	PIN #3/16x3/8	2
30	24116150	COLLAR	1
31	31523037	KRYT RUCNIHO KOLA	1
32	31652001	SENSOR DRIVE SHAFT	1
33	31766009	DRIVE GEAR STUD	1
34	31838030	GEAR STUD	3
35	32652015	BELT GUARD	1
36	35812049	GEAR GUARD	1
37	36224010	GEAR - SMALL INTERMED.	2
38	36226017	INTER GEAR LARGE	1
39	36228009	CAM SHAFT DRIVEGEAR	1
40	36228020	DRIVE GEAR	1
41	36271013	PRESSER FOOTDRIVE GEAR	1
42	36515032	CAM SHAFTBEARING	1
43	36713007	HAND WHEEL	1

UPPER NEEDLE BAR

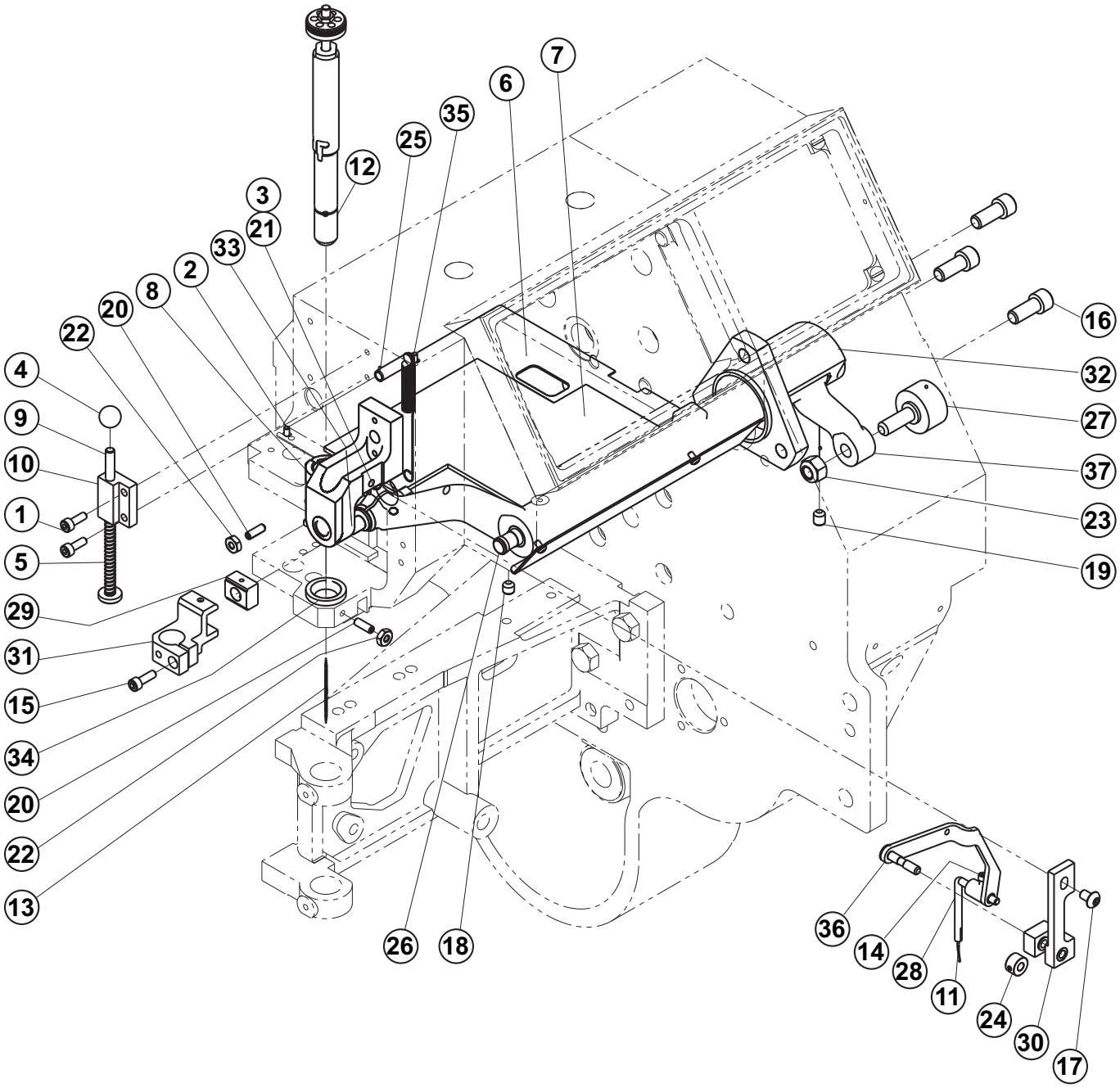

Released: 04/2024
E-mail: info@amfreece-cars.cz

UPPER NEEDLE BAR

DET	PART NUMBER	DESCRIPTION	QTY.
1	08.6000.4.012	SCREW M4-12	2
2	08.6200.3.005	SCREW M3-5 I	4
3	08.6852.5.000	WASHER 5,3	1
4	12.0008.6.979	BALL	1
5	12.3010.0.014	SPRING C	1
6	70.3265.2.017	COVER	1
7	70.3271.1.025	SOUND ISOLATION	1
8	70.3652.3.023	NEEDLE BAR BUSHING - UPPER	1
9	70.3652.3.025	BAR	1
10	70.3652.3.026	BLOCK	1
11	70.3721.3.002	NEEDLE THREADER-MODIFICATION	1
12	70.9001.0.050	NEEDLE BAR SIZE 38 - ASSEMBLY	1
13	103238	NEEDLE #38	1
14	1000004	SCR. HEX. SOC. HD. CAP #5-40x1/4	1
15	1000013	SCREW #8-32x1/2	1
16	1000039	SCREW #5/16-18 x 3/4	3
17	1200007	SCREW #10-32 x 3/8	1
18	3100008	SCREW #1/4-20 x 1/4	1
19	3100066	SCREW #1/4-20 x 5/16	1
20	3130001	SCREW #8-32 x 1/2	2
21	4200011	SCREW #10-32 x 5/8	1
22	6020019	NUT #8-32	2
23	6104001	LOCKNUT 5/16-24	1
24	24117520	COLLAR	1
25	31721039	SPRING POST	1
26	31723007	NEEDLE BARROCKET ARM PIVOT	1
27	31773015	BALL BEARING STUD	1
28	31996006	THREADER ARM	1
29	33182005	NEEDLE BAR BEARING BLOCK	1
30	33215069	THREADER BEARING	1
31	33441003	NEEDLE BAR CLAMP - UPPER	1
32	35521048	NEEDLE BAR ROCKER ARM BEARING	1
33	36518030	BEARING BLOCK STUD	1
34	36523022	SMALL BUSH	1
35	36546023	SPRING	1
36	36631031	THREADER LEVER	1
37	70.0118.0.700	NEEDLE BAR ROCKER ARM	1

LOWER NEEDLE BAR

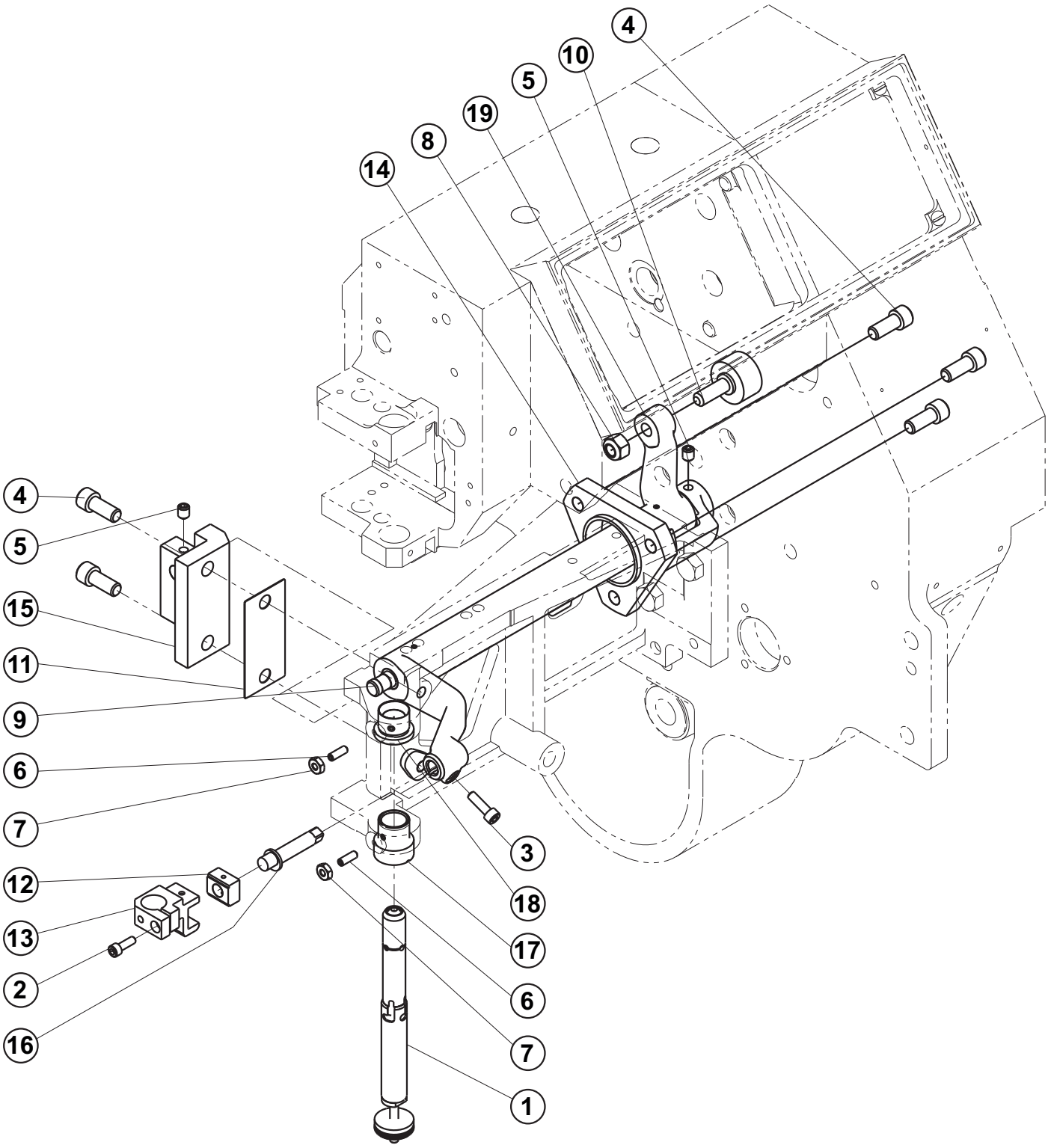

Released: 04/2024
E-mail: info@amfreece-cars.cz

LOWER NEEDLE BAR

DET	PART NUMBER	DESCRIPTION	QTY.
1	70.9001.0.050	NEEDLE BAR SIZE 38 - ASSEMBLY	1
2	1000013	SCREW #8-32x1/2	1
3	1000021	SCREW #10-32 x 5/8	1
4	1000039	SCREW #5/16-18 x 3/4	5
5	3100066	SCREW #1/4-20 x 5/16	2
6	3130001	SCREW #8-32 x 1/2	2
7	6020019	NUT #8-32	2
8	6104001	LOCKNUT 5/16-24	1
9	31723007	NEEDLE BARROCKET ARM PIVOT	1
10	31773015	BALL BEARING STUD	1
11	32223045	SHIM	1
12	33182005	NEEDLE BAR BEARING BLOCK	1
13	33441002	NEEDLE BAR CLAMP - LOWER	1
14	35521048	NEEDLE BAR ROCKER ARM BEARING	1
15	35521049	ROCKER ARM BEARING	1
16	36518030	BEARING BLOCK STUD	1
17	36523021	NEEDLE BAR BUSHING	1
18	36523022	SMALL BUSH	1
19	70.0118.0.700	NEEDLE BAR ROCKER ARM	1

NEEDLE BAR SIZE 38

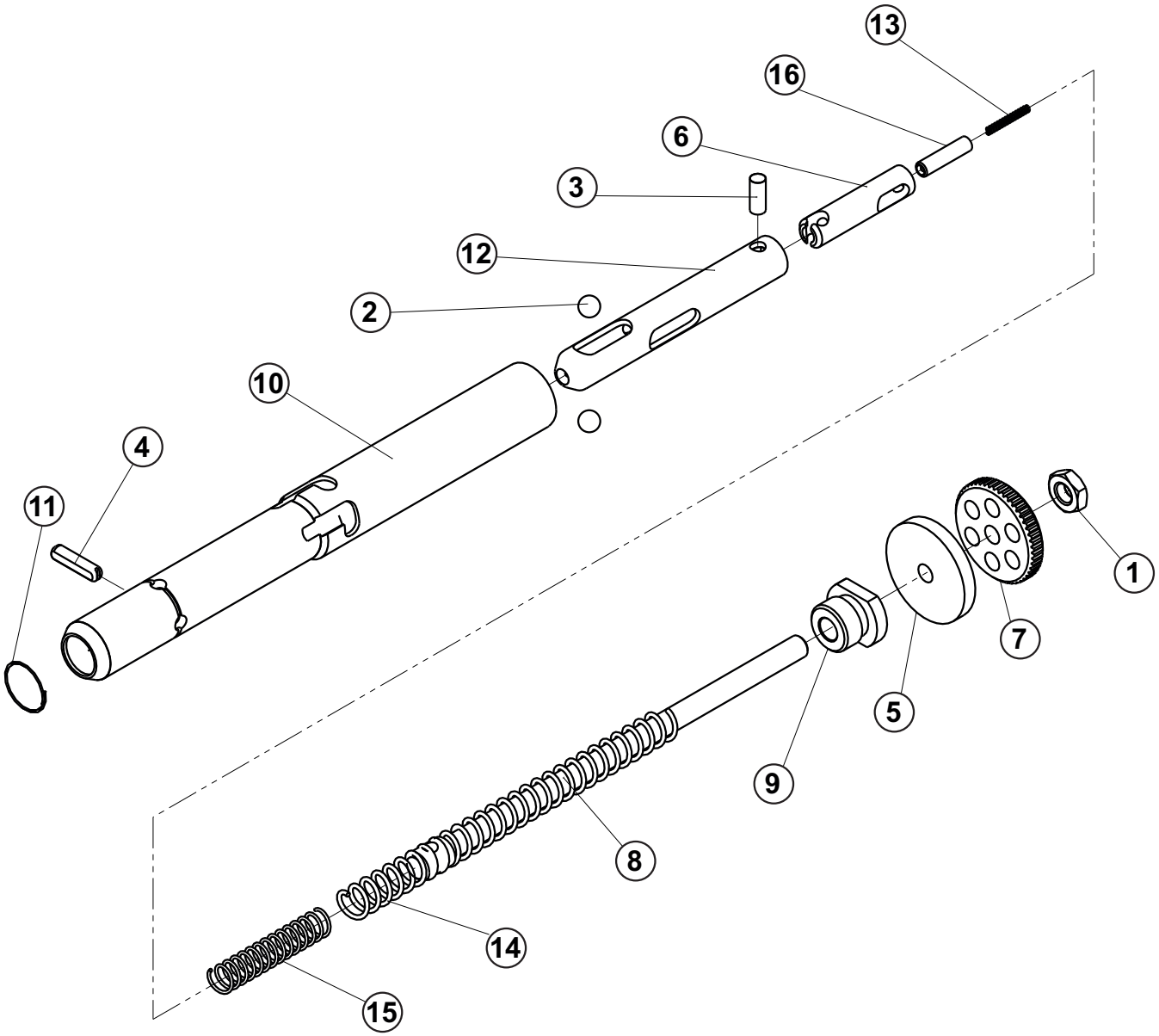

Released: 04/2024
E-mail: info@amfreece-cars.cz

NEEDLE BAR SIZE 38

DET	PART NUMBER	DESCRIPTION	QTY.
1	6002001	NUT 10-32	1
2	22965006	BALL	2
3	31111009	CONNECTING PIN	1
4	31264001	NEEDLE STOP PIN	1
5	31412001	SPRING PLUNGER WASHER	1
6	31566008	NEEDLE CLAMP SLEEVE	1
7	31593007	SLEEVE ADJUST NUT	1
8	31674025	SLEEVE EXTENSION	1
9	31695011	NEEDLE BAR SPRING CAP	1
10	31697003	NEEDEL BAR	1
11	35131002	NEEDLE STOP PIN RETAINER	1
12	35511021	NEEDLE SUPPORT SLEEVE	1
13	36531010	NEEDLE STOP SPRING	1
14	36532021	NEEDLE CAP SPRING	1
15	36532022	NEEDLE LOCK SPRING	1
16	36771021	NEEDLE STOP	1

PRESSER FOOT

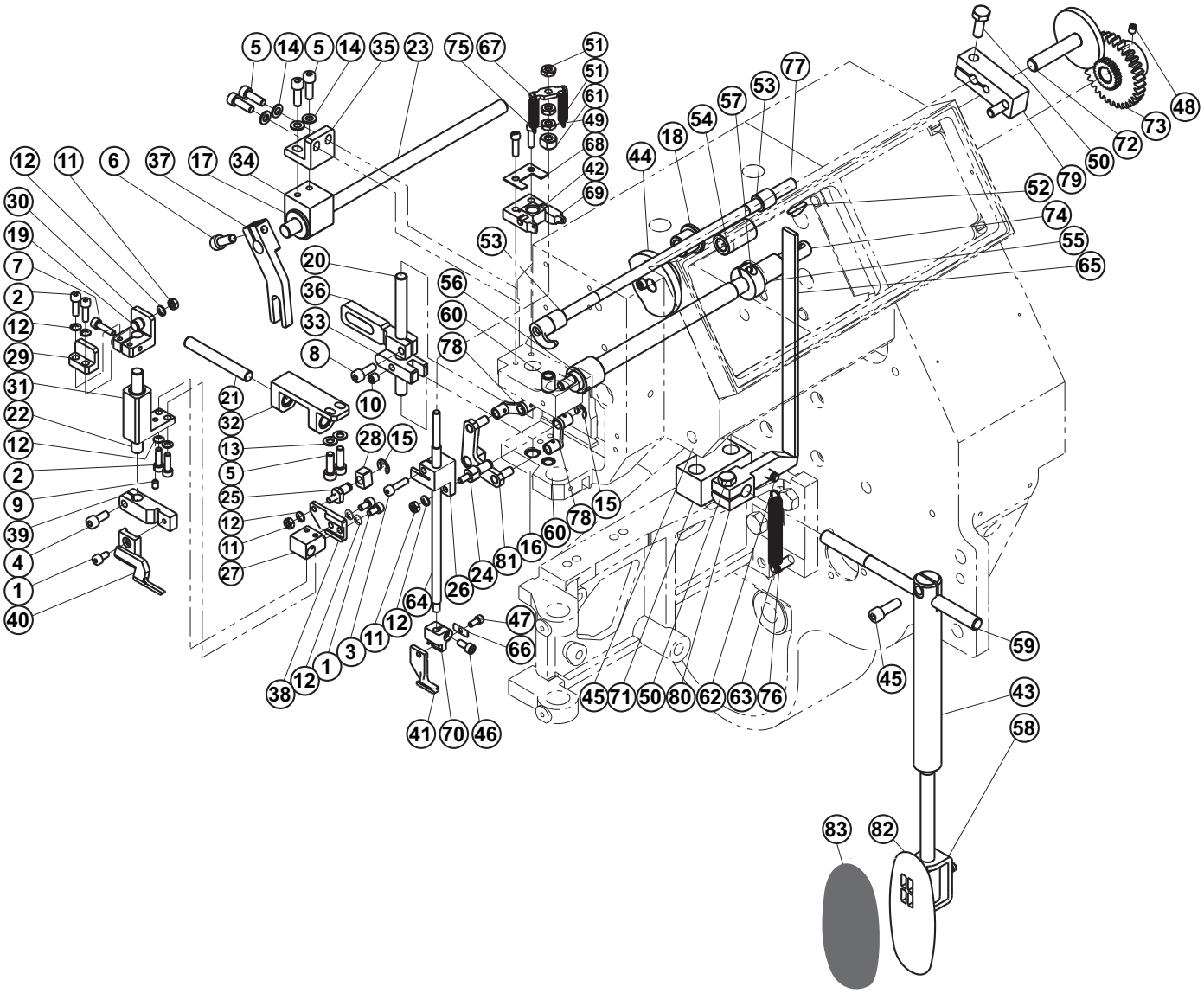

Released: 04/2024
E-mail: info@amfreece-cars.cz

PRESSER FOOT

DET	PART NUMBER	DESCRIPTION	QTY.
1	08.6000.4.008	SCREW M4-8	3
2	08.6000.4.014	SCREW M4-14	4
3	08.6000.4.016	SCREW M4-16	1
4	08.6000.5.012	SCREW M5-12	1
5	08.6000.5.016	SCREW M5-16	6
6	08.6000.6.016	SCREW M6-16	1
7	08.6002.4.016	SCREW M4-16	1
8	08.6002.5.014	SCREW M5-14	1
9	08.6400.4.006	SCREW M4-6	1
10	08.6410.6.006	SCREW M6-6	1
11	08.6700.4.000	NUT M4	3
12	08.6802.4.000	SPRING WASHER M4	9
13	08.6850.5.000	WASHER 5,3	2
14	08.6852.5.000	WASHER 5,3	4
15	12.1045.0.005	RETAINING RING 5	2
16	12.2080.0.034	BUSHING	1
17	12.2080.1.007	BUSHING	1
18	12.2080.1.008	BUSHING	1
19	12.2099.2.002	CAM FOLLOWER	1
20	70.0012.0.300	VERTICAL SHAFT, 1	1
21	70.0013.0.300	SIDE SHAFT	1
22	70.0014.0.300	VERTICAL SHAFT, 2	1
23	70.0015.0.300	CONNECTING SHAFT	1
24	70.0018.0.300	STUD	1
25	70.0019.0.300	SLIDE BLOCK PIN	1
26	70.0020.0.600	BLOCK	1
27	70.0021.0.600	CROSSFEED CASE	1
28	70.0022.0.600	SLIDE BLOCK PIN	1
29	70.0023.0.600	HOLDER METAL	1
30	70.0024.0.600	HOLDER	1
31	70.0025.0.600	FEED CASE	1
32	70.0026.0.600	BRACKET	1
33	70.0027.0.600	ROCKING BLOCK	1
34	70.0029.0.600	BRACKET	1
35	70.0030.0.600	BRACKET UPPER	1
36	70.0036.0.600	ROCKING BLOCK	1
37	70.0037.0.600	UPPEER FEED LEVER	1
38	70.0038.0.600	PLATE	1
39	70.0039.0.600	UPPER FEED FITTING LEVER	1
40	70.0040.0.600	PRESSER FOOT	1

PRESSER FOOT

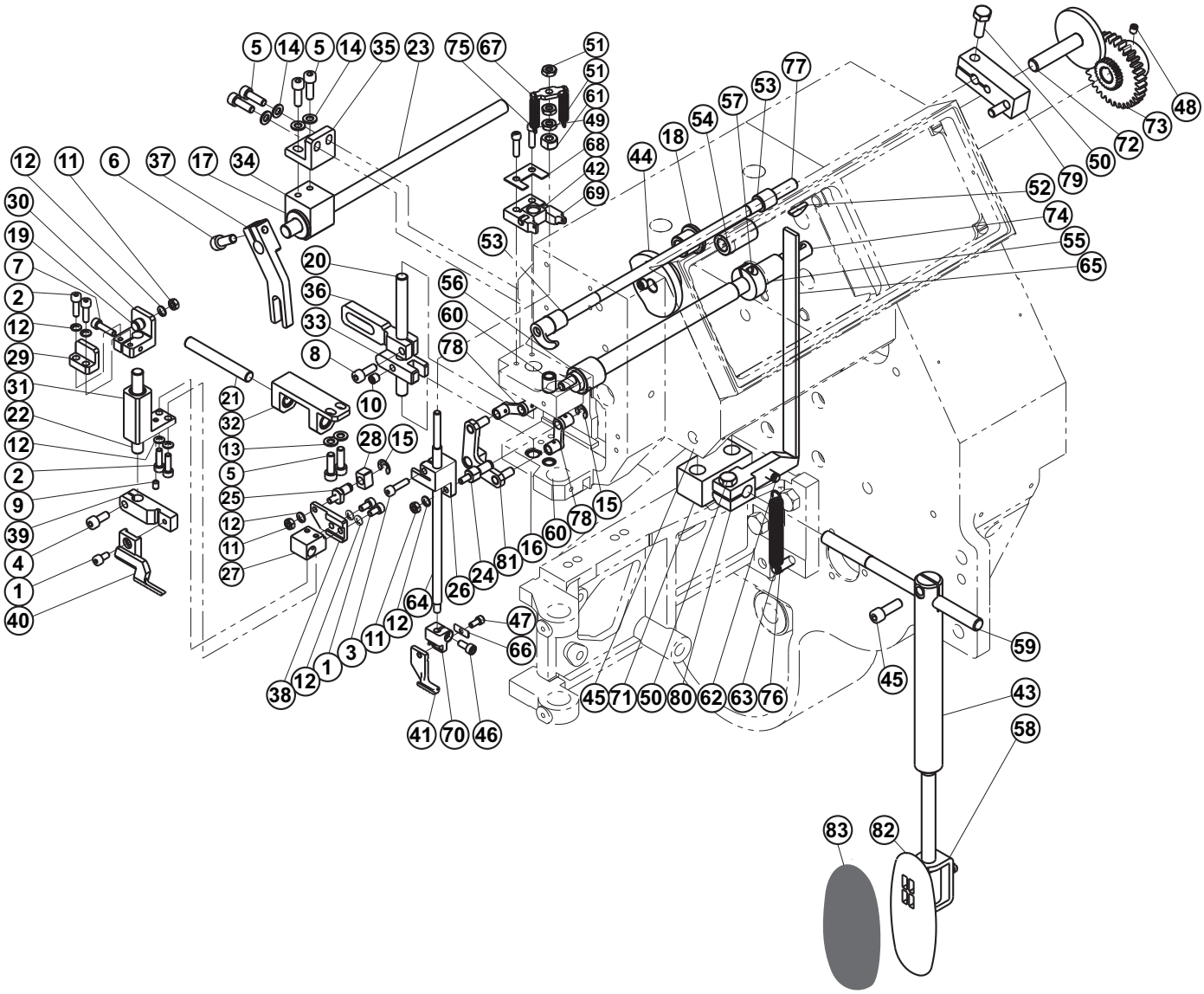

Released: 04/2024
E-mail: info@amfreece-cars.cz

PRESSER FOOT

DET	PART NUMBER	DESCRIPTION	QTY.
41	70.0042.0.600	PRESSER FOOT	1
42	70.0043.0.600	PRESSER FOOT SWIVEL	1
43	70.3172.1.024	KNEE OPERATING SHAFT	1
44	70.4223.3.029	RIGHT UPPER LOOPER CAM - ASSEMBLY	1
45	1000008	SCREW #1/4-20x3/4	3
46	1000020	SCREW #8-32 x 3/8	1
47	1000301	SCREW #6-40x5/16	1
48	3100012	SCREW #10-32x1/4	1
49	4120009	SCREW #8-32x5/8	2
50	4200007	SCREW 1/4-20x3/4	2
51	6000002	NUT #10-32	3
52	9020001	KEY HP 504	1
53	23132123	OILITE BUSHING AA-520-3	2
54	23132178	OILITE BUSHING AA-630-1	1
55	23132199	OILITE BUSHING AA-627-4	1
56	23132297	OILITE BUSHING AA-807-3	1
57	24117014	COLLAR	1
58	26913025	HOLDER	1
59	31133018	PRESSER FOOT OPERATEING SHAF	1
60	31423006	PRESSER FOOT BUSHING	2
61	31571002	STATIONARY PRESSER FOOT CAP	1
62	31721038	SPRING POST	1
63	31721040	SPRING POST	1
64	31772035	STATIONARY PRESSER FOOT SHAFT	1
65	32111012	FOOT LIFTER ROD	1
66	32215003	TOE HOLDER WASHER	1
67	32729001	SPRING CLIP	1
68	32732001	PRESSER FOOTSEAT COVER	1
69	33256011	FOOT SWIVEL SEAT	1
70	35511080	SWIVEL TOE HOLDER	1
71	35521055	PRESSER FOOT BEARING	1
72	36227019	SHAFT RIGHT LOOPER CAM	1
73	36271013	PRESSER FOOT DRIVE GEAR	1
74	36518077	OPER. SHAFT	1
75	36541005	SPRING	2
76	36543018	SPRING	1
77	36619044	SHAFT/PRESS.FT.LISTER	1
78	36621001	CONNECTING LINK	2
79	36651001	PRESSER FOOT LIFTER LEVER	1
80	36651002	PRESSER FOOT LEVER	1
81	36672047	BELL CRANK	1
82	36773008	KNEE PLATE PAD	1
83	36773007	KNEE PLATE PAD	1

LOWER LOOPER AND THREAD DRUM

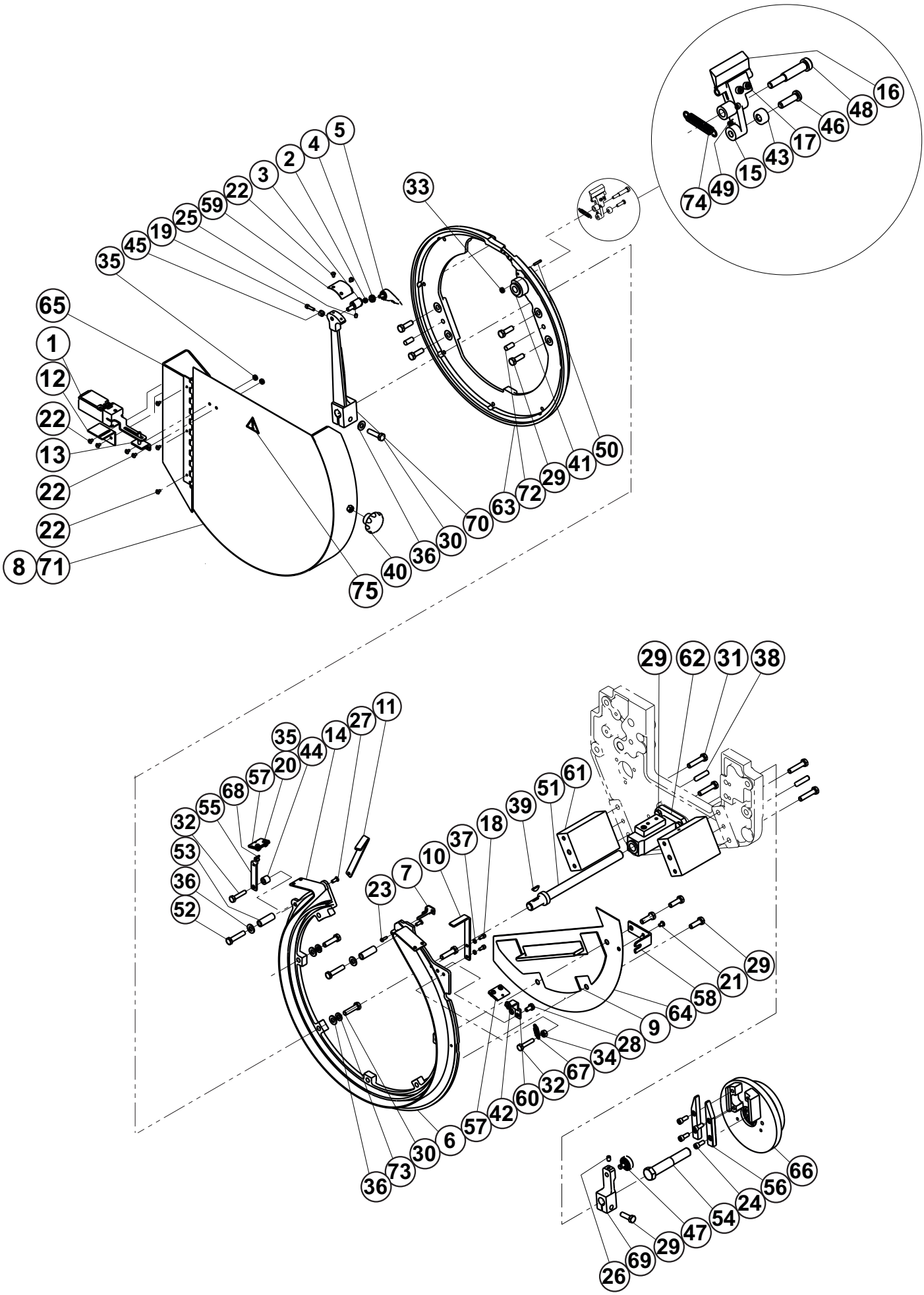

Released: 04/2024
E-mail: info@amfreece-cars.cz

LOWER LOOPER AND THREAD DRUM

DET	PART NUMBER	DESCRIPTION	QTY.
1	12.0008.4.595	SWITCH SCHNEIDER	1
2	12.2010.0.056	BALL BEARING	1
3	70.0050.0.300	LOWER LOOPER HOOK EX	1
4	70.0051.0.400	LOWER LOOPER ROLLER	1
5	70.0053.0.000	LOWER LOOPER HOOK ASSY.	1
6	70.0055.0.700	THREADER SEPARATOR	1
7	70.0058.0.800	GUIDE	1
8	70.3271.1.021	SOUND ISOLATION	1
9	70.3271.1.022	SOUND ISOLATION	1
10	70.3288.3.604	HOLDER	1
11	70.3288.3.605	HOLDER	1
12	70.3441.6.045	SWITCH HOLDER	1
13	70.3441.6.046	CONTROLLER	1
14	70.3657.2.009	THREAD BELT	1
15	70.3669.1.008	BRUSH HOLDER CAM LEVER	1
16	70.3727.4.013	THREAD BRUSH	1
17	1000010	SCREW #5-40 x 1/2	2
18	1000020	SCREW #8-32 x 3/8	2
19	1002015	SCREW #8-32 x 5/8	1
20	1200005	SCREW #8-32 x 3/8	4
21	1200007	SCREW #10-32 x 3/8	1
22	1200011	BUTTON HD SCREW 8-32x1/4	9
23	1200019	SCREW #6-32x1/2	1
24	1000026	SCREW #1/4-20 x 5/8	4
25	3100012	SCREW #10-32x1/4	1
26	3100013	SCREW #1/4-20 x 3/8	1
27	4000020	SCREW #10-32 x 1/2	2
28	4200012	SCREW #1/4-20x1/2	1
29	4200027	SCREW #5/16-18x1	11
30	4200031	SCREW #5/16-18x1 1/4	4
31	4200051	SCREW #5/16-18x1 1/2	4
32	4202013	SCREW 1/4-20x1 1/4	2
33	6000002	NUT #10-32	1
34	6000004	NUT #1/4-20	1
35	6020019	NUT #8-32	6
36	7012010	WASHER #5/16	5
37	7102007	LOCK WASHER #8	2
38	8000022	PIN #5/16 x 1 1/4	2
39	9020001	KEY HP 504	1
40	22967003	KNOB	1

LOWER LOOPER AND THREAD DRUM

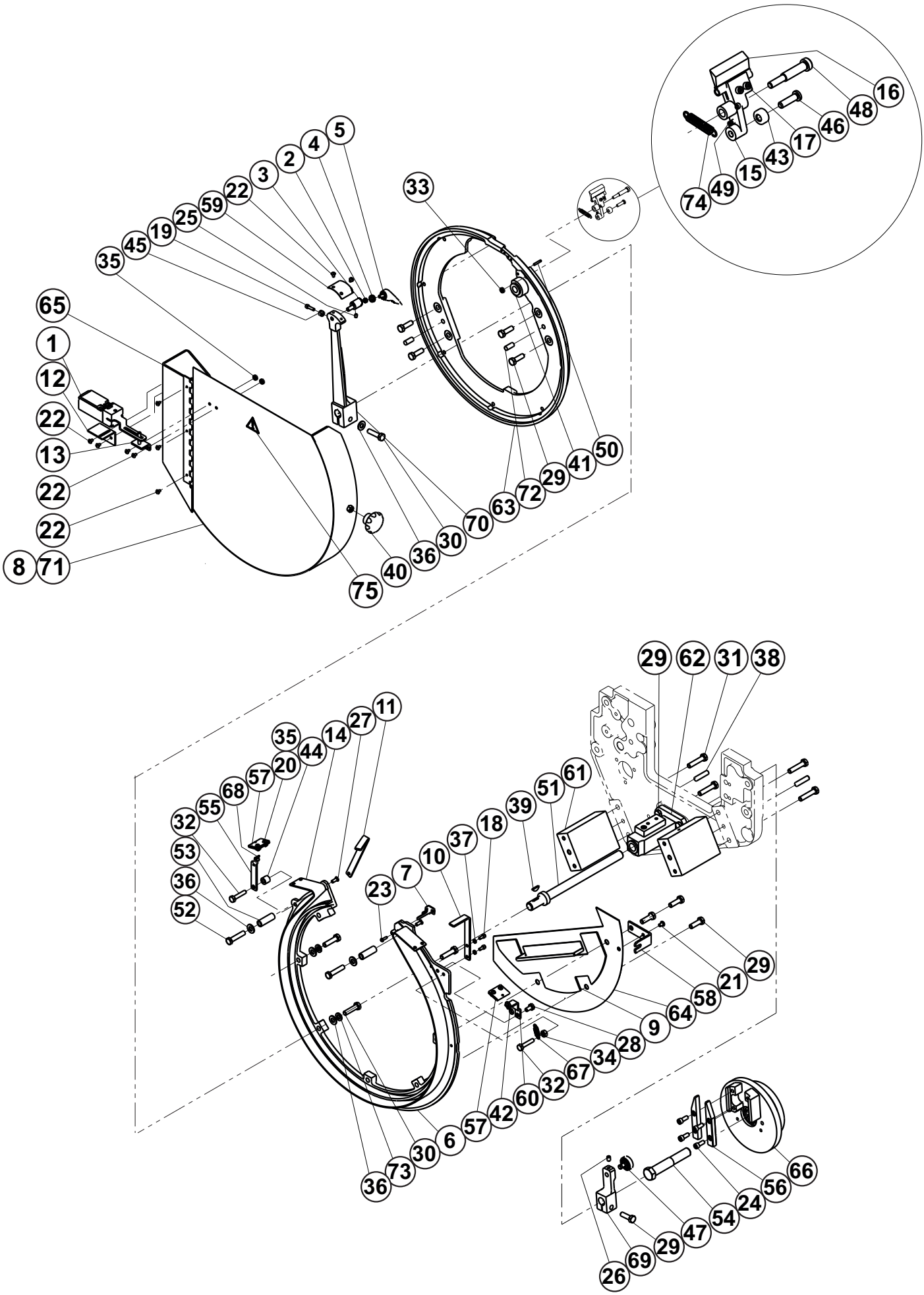

Released: 04/2024
E-mail: info@amfreece-cars.cz

LOWER LOOPER AND THREAD DRUM

DET	PART NUMBER	DESCRIPTION	QTY.
41	23161073	BEARING	1
42	23914009	HOOK	1
43	31413030	CAM ROLLER	1
44	31423032	SPACER	1
45	31572004	LOWER LOOPER HOOK	1
46	31612051	CAM ROLL STUD	1
47	31715005	LOWER LOOPER ARM CRANK BALL	1
48	31718025	BRUSH CAM LAVER STUD	1
49	31721053	SPRING POST	1
50	31721054	SPRING POST	1
51	31781006	LOWER LOOPER SHAFT	1
52	31838013	LH BELT PULLEY STUD	2
53	31838014	BUSHING 8x35	2
54	31845002	LOWER ARM DRIVE GEAR STUD	1
55	32241004	LEVER	1
56	32533076	DRIVE GIB	2
57	34111085	BELT SPRING FASTENER	2
58	34372004	LOCK CLIP	1
59	34585001	LOWER LOOPER BELT SUPPORT	1
60	34647001	BELT TIGHTENING ARM	1
61	35371004	DRUM-REAR TIE BRACKET	2
62	35541070	HOOK ARM BEARING	1
63	35633041	DRUM	1
64	35778014	R.S. DRUM COVER - ASSEMBLY	1
65	35812048	REAR DRUM GUARD	1
66	36271006	CRANK DRIVE GEAR	1
67	36542017	SPRING LE-037CD-2MW	1
68	36543019	SPRING	1
69	36651008	LOWER LOOPER ARM CRANK	1
70	36653010	LOWER LOOPER ARM	1
71	41831082	DRUM COVER ASSY	1
72	8000056	PIN #5/16 x 3/4	2
73	7100008	WASHER LOCK #5/16	2
74	36541006	SPRING	1
75	17.0097.5.174	LABEL- WARNING	1

MAIN CAM HAFT

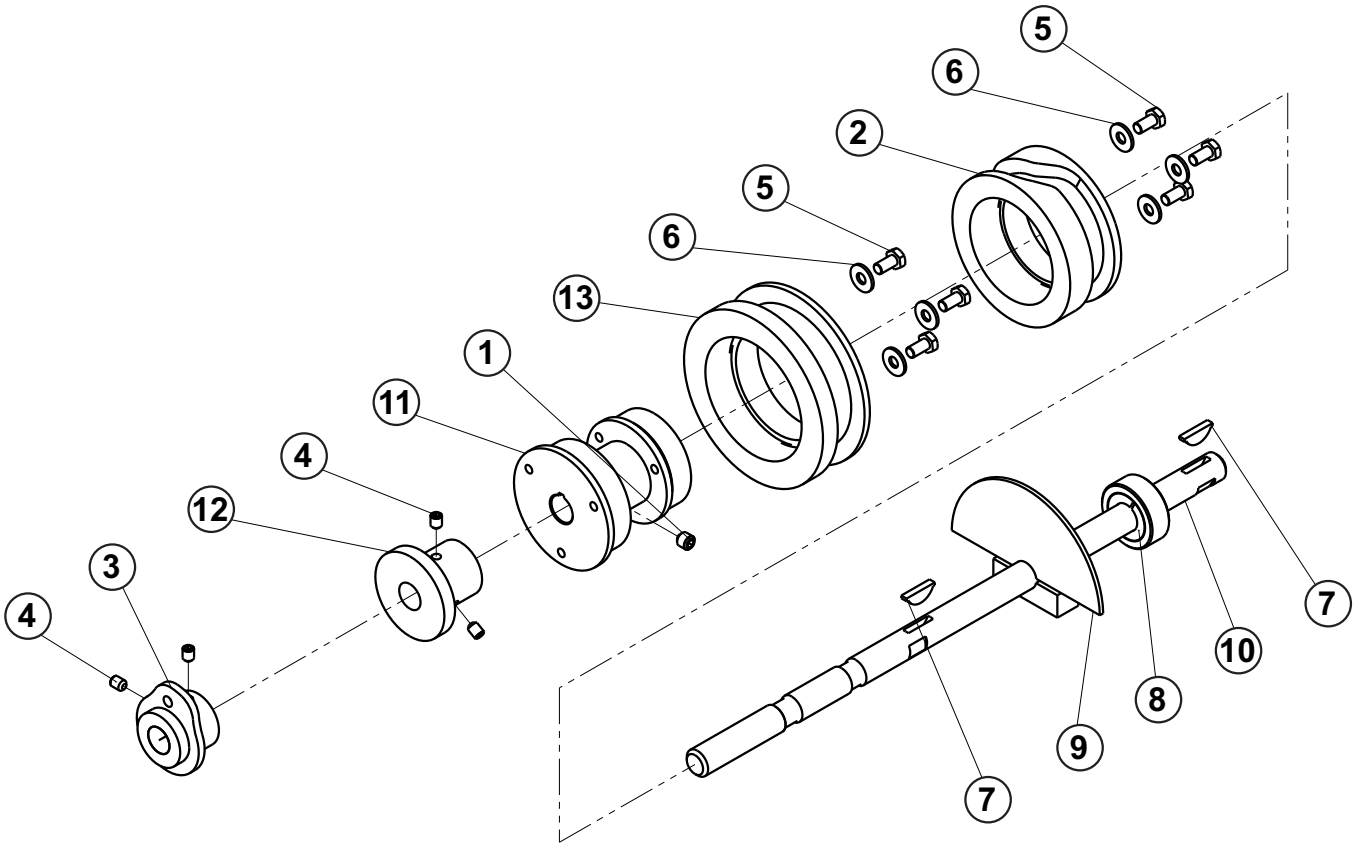

Released: 04/2024
E-mail: info@amfreece-cars.cz

MAIN CAM HAFT

DET	PART NUMBER	DESCRIPTION	QTY.
1	01.2548.0.000	SCREW #1/4-20 x 1/4	1
2	70.0011.0.400	THREAD LIFTER CAM	1
3	70.0041.0.400	BRUSH CAM	1
4	3100012	SCREW #10-32x1/4	4
5	4200039	SCREW #10-32x3/8	6
6	7012001	WASHER FLAT	6
7	9020001	KEY HP 504	2
8	24117012	COLLAR	1
9	31000008	FEED DOG SENSOR FLAG ASSY.	1
10	31734013	GAM SHAFT	1
11	31751004	CALMP FINGERCAM HUB	1
12	36223009	DRIVE GEAR	1
13	36516014	THREAD CLAMP CAM	1

THREAD GRIPPER ELEVATOR

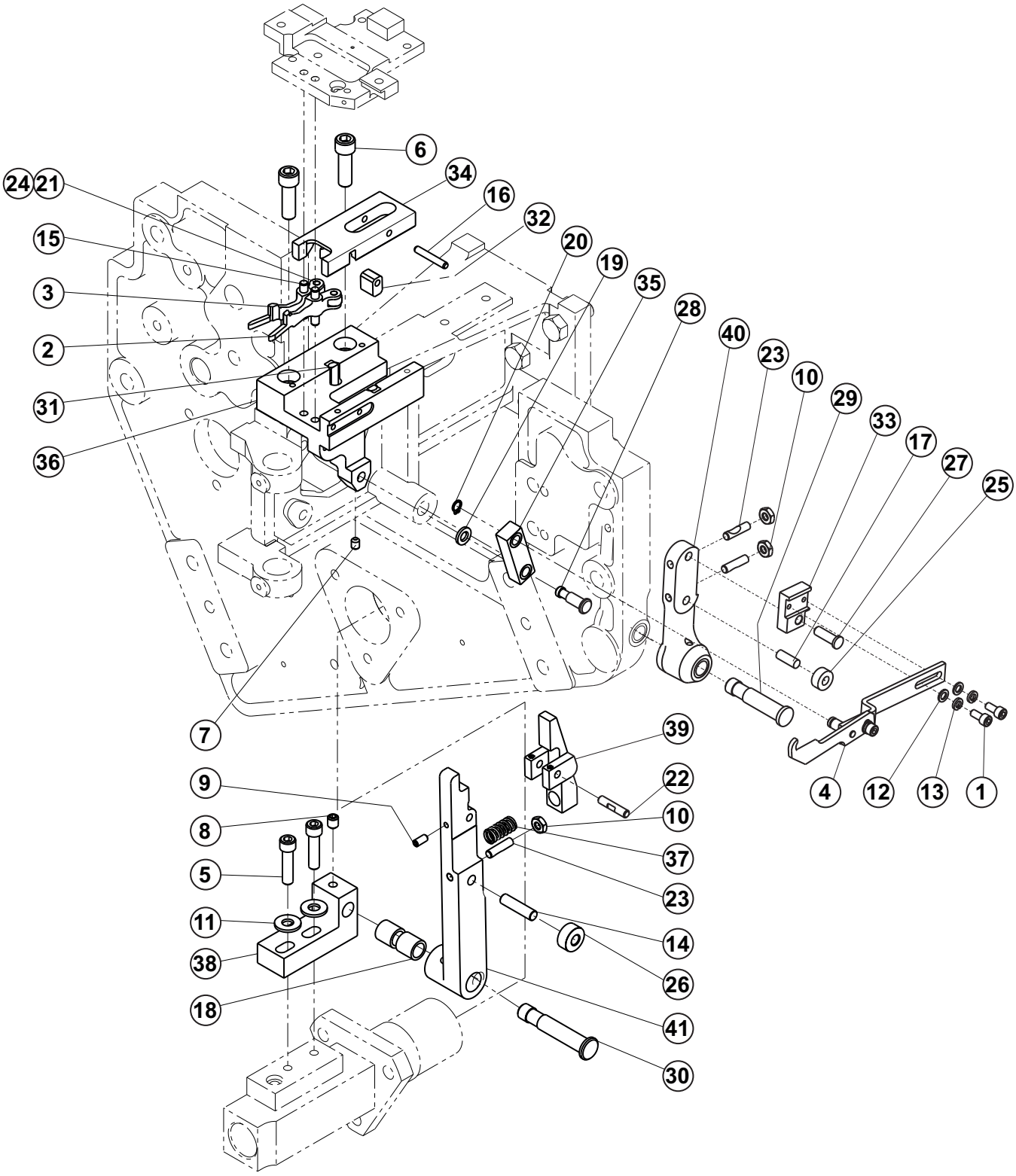

Released: 04/2024
E-mail: info@amfreece-cars.cz

THREAD GRIPPER ELEVATOR

DET	PART NUMBER	DESCRIPTION	QTY.
1	01.2436.0.000	SCREW	2
2	70.0056.0.600	FRONT FINGER	1
3	70.0057.0.600	FRONT FINGER	1
4	70.3721.1.153	LIFTER HOOK - ASSEMBLY	1
5	1000037	SCREW #1/4-20 x 1	2
6	1000047	SCREW 5/16-18x1	2
7	3100012	SCREW #10-32x1/4	1
8	3100066	SCREW #1/4-20 x 5/16	1
9	3140003	SCREW #8-32 x 3/8	1
10	6000002	NUT #10-32	3
11	7012002	WASHER 1/4	2
12	7012005	WASHER FLAT #8	2
13	7102007	LOCK WASHER #8	2
14	8000007	PIN DOWEL 1/4x1	1
15	8000044	PIN #3/16	2
16	8000109	PIN #5/32 x 1	1
17	8000110	PIN 7/8” - 5/8”L	1
18	23132142	BEARING	2
19	23174033	WASHER THRUST TT 400	1
20	25379218	RING #5100-25	1
21	31112002	THREAD CLAMP ROLLER PIN	2
22	31215008	SPRING PIECE PIN	1
23	31288023	CLAMP STUD	3
24	31413029	CAM ROLLER	2
25	31413031	CAM COLLER	1
26	31423068	CAM ROLLER	1
27	31611010	CAM LEVER STUD	1
28	31641010	THREAD HOOK LIFTER LEVER STUD	1
29	31641015	STUD	1
30	31641019	CLAMP FINGER CAM LEVER STUD	1
31	32121004	SLIDE WICK OILER	2
32	32434001	PIVOT BLOCK	1
33	33244009	HOOK ADJUST BLOCK	1
34	33257001	CLAMP FINGER CAM SLIDE	1
35	33334012	LIFTER LEVER	1
36	35551002	THREAD CLAMP FINGER BRKT.	1
37	36532025	SPRING - COMPRESSION	1
38	36613038	BRACKET	1
39	36647001	SPRING PIECE	1
40	36661001	THREAD LIFTER CAM LEVER	1
41	36673028	LEVER	1

TENSION FINGER

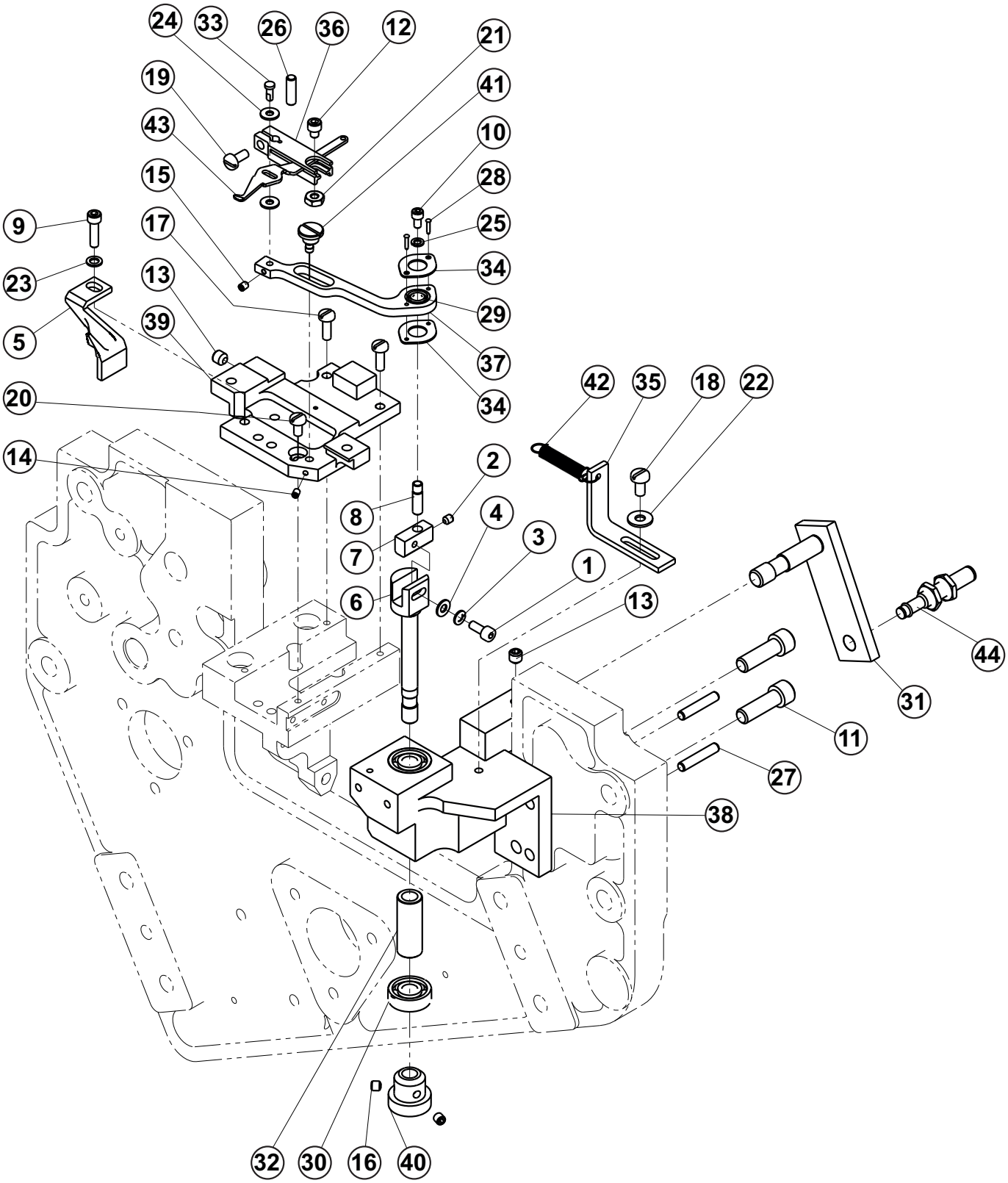

Released: 04/2024
E-mail: info@amfreece-cars.cz

TENSION FINGER

DET	PART NUMBER	DESCRIPTION	QTY.
1	08.6000.4.010	SCREW M4-10	1
2	08.6400.4.005	SCREW M4-5	1
3	08.6802.4.000	SPRING WASHER M4	1
4	08.6852.4.000	WASHER M4	1
5	70.3541.2.031	LOWER LOOP SUPPORT - PYRAMID	1
6	70.3651.8.020	ECCENTRIC SHAFT	1
7	70.3651.8.021	HOLDER	1
8	70.3651.8.022	STUD	1
9	1000001	SCREW #8-32 x 5/8	1
10	1000005	SCREW #6-32 x 1/4	1
11	1000047	SCREW 5/16-18x1	2
12	1000058	SCREW #8-32 x 3/16	1
13	3100008	SCREW #1/4-20 x 1/4	2
14	3100038	SCREW #5-40 x 3/16	1
15	3100147	SCREW #6-40 x 3/16	1
16	3100154	SCREW #10-32 x 3/16	2
17	4120001	SCREW #8-32 x 1/2	2
18	4120002	SCREW #10-32 x 3/8	1
19	4120004	SCREW #8-32 x 3/8	1
20	4120012	SCREW #8-32 x 5/16	1
21	6020019	NUT #8-32	1
22	7012001	WASHER FLAT	1
23	7012005	WASHER FLAT #8	1
24	7016002	WASHER	2
25	7102001	WASHER LOCK #6	1
26	8000015	PIN	1
27	8000044	PIN #3/16	2
28	8504001	RIVET #1/16 x 5/16	2
29	23231040	BEARING	1
30	23231226	BEARING 608-2RSH	2
31	31000009	SENZOR HOLDER	1
32	31426015	BALL BEARING SPACER	1
33	31611064	PLAIN STUD	1
34	32691001	BEARING RETAINER	2
35	34372042	FINGER SPRING TENSION HOLDER	1
36	35511045	FINGER SUPPORT	1
37	35526005	TENSION FINGER SLIDE	1
38	35542007	BEARING BRACKET	1
39	35815007	BRACKET COVER	1
40	36221009	DRIVEN GEAR	1
41	36518027	ECCENTRIC STUD	1
42	36542018	SPRING	1
43	37211131	THREAD TENSION FINGER	1
44	12.0010.4.025	SENSOR	1

MATERIAL FEED

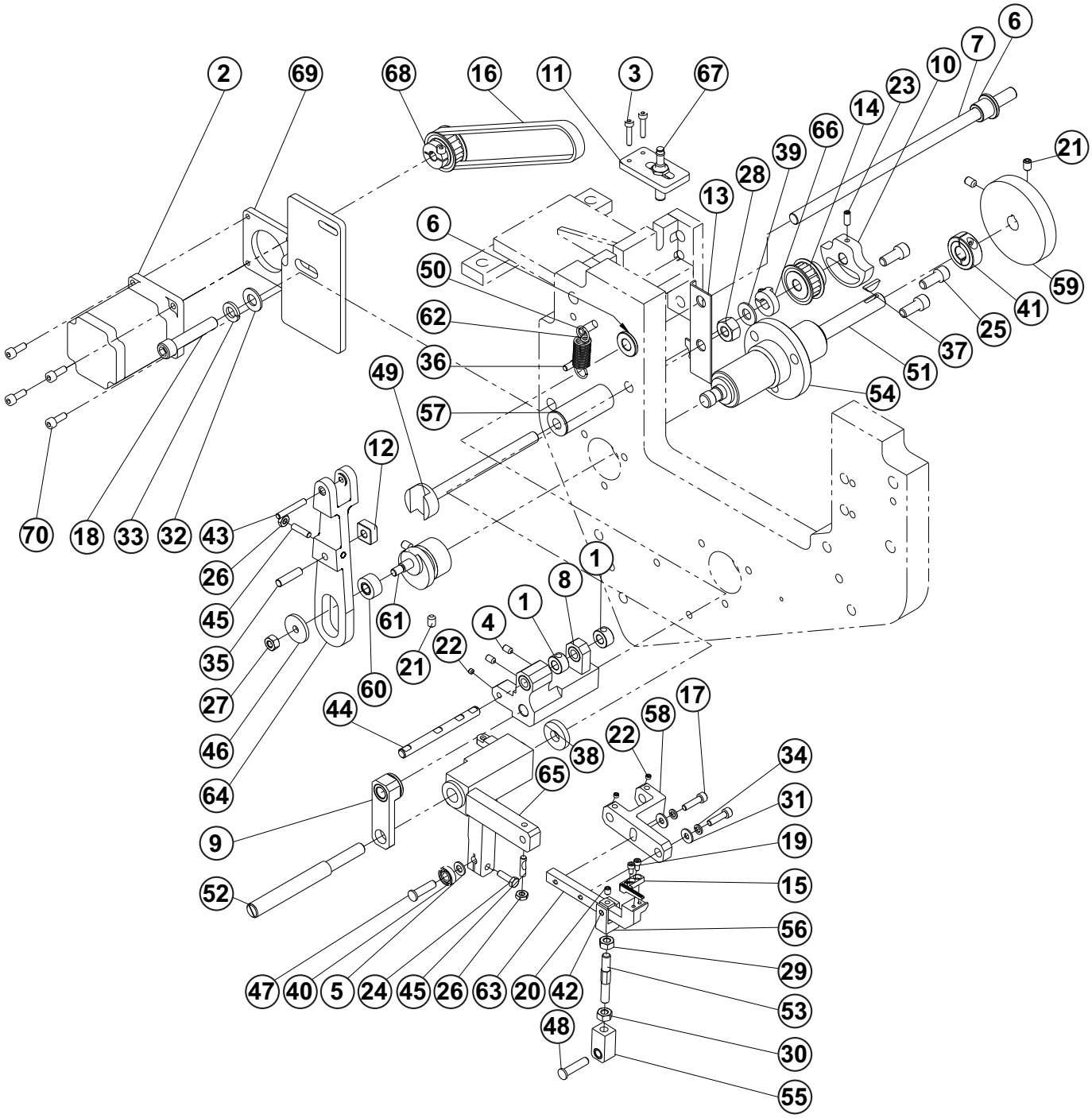

Released: 04/2024
E-mail: info@amfreece-cars.cz

MATERIAL FEED

DET	PART NUMBER	DESCRIPTION	QTY.
1	01.7435.1.000	COLLAR	2
2	06.7000.0.022	STEPPER MOTOR	1
3	08.6000.4.020	SCREW M4-20 DIN 912	2
4	08.6400.5.008	SCREW M5-8 DIN 916	2
5	08.6852.6.000	WASHER M6 DIN125A	1
6	12.2080.1.008	BUSHING PSMF101616	2
7	70.0016.0.300	CONNECTING SHAFT	1
8	70.0033.0.600	FEED MOTION BRACKET	1
9	70.0034.0.600	HOLDER	1
10	70.3100.0.019	HOME SENSOR CAM	1
11	70.3100.0.020	SENZOR HOLDER	1
12	70.3142.3.070	GUIDE BLOCK	1
13	70.3462.7.067	LIMIT STOP PLATE	1
14	70.3634.3.063	PULLEY - STITCH ADJ.	1
15	70.3661.1.041	MATERIAL FEEDER	1
16	24381054	BELT	1
17	1000019	SCREW #10-32 X 3/4	2
18	1000055	SCREW #3/8-16 x 2	1
19	1000059	SCREW #6-40 x 1/4	2
20	3100012	SCREW #10-32x1/4	1
21	3100013	SCREW #1/4-20 x 3/8	4
22	3100051	SCREW #8-32 x 1/8	3
23	3102026	SCREW #10-32X1/2	1
24	4200011	SCREW #10-32 x 5/8	1
25	4200030	SCREW #5/16-18 x 3/4	3
26	6000002	NUT #10-32	2
27	6000005	NUT #1/4-28	1
28	6000014	NUT #3/8-16	1
29	6020004	NUT #1/4-20	1
30	6020021	NUT #1/4-20	1
31	7012001	WASHER FLAT	2
32	7012003	WASHER #3/8	1
33	7100009	WASHER #3/8 SPRING LOCK	1
34	7100011	WASHER #10 LOCK SPRING	2
35	8000007	PIN DOWEL 1/4x1	1
36	8000044	PIN #3/16	1
37	9020001	KEY HP 504	1
38	22912090	WASHER	1
39	23181235	WAASHER	1
40	23231045	BEARING	1

MATERIAL FEED

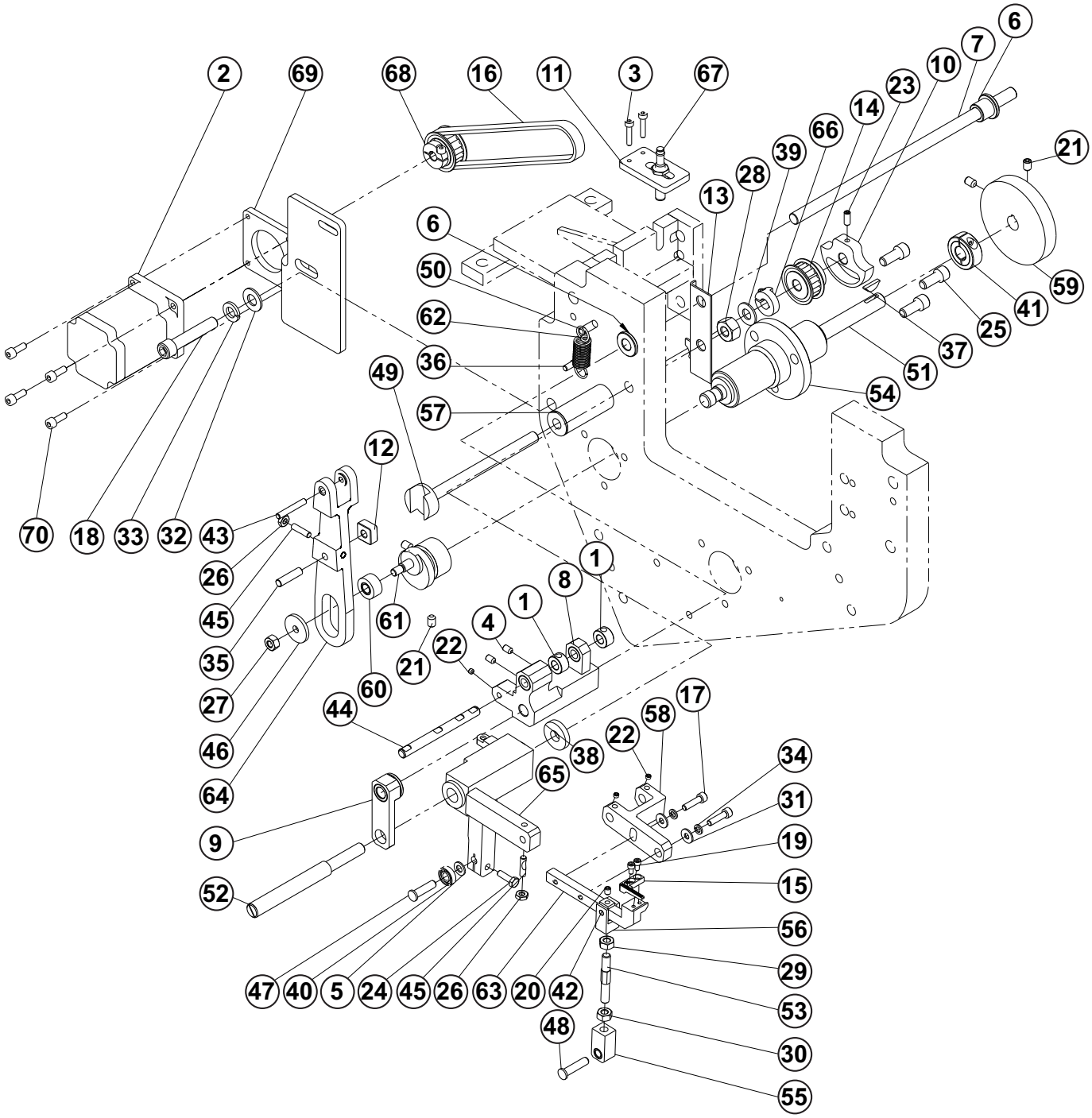

Released: 04/2024
E-mail: info@amfreece-cars.cz

MATERIAL FEED

DET	PART NUMBER	DESCRIPTION	QTY.
41	24117012	COLLAR	1
42	31215002	LIFTER FORK PIN	1
43	31215079	FEED MOTION BRACKET PIN	1
44	31217001	SHAFT	1
45	31288023	CLAMP STUD	2
46	31421005	WASHER	1
47	31612052	CAM ROLL STUD	1
48	31612054	CAM ROLL STUD	1
49	31644004	STITCH ADJUSTING SLIDE BLOCK	1
50	31721039	SPRING POST	1
51	31728003	MATERIAL FEEDD RIVE SHAFT	1
52	31773013	BRACKET SHAFT	1
53	31852015	FEEDER LIFTER ROD	1
54	31881004	MTL. FEED DRIVE	1
55	32428002	FEEDER LIFTER ROD HD.	1
56	32739004	FEEDER LIFTER ROD FORK	1
57	35225010	STITCH ADJUDTING SLIDE BEARING	1
58	35523018	FEEDER SUPPORT BRKT.	1
59	36226011	MATERIAL FEED DRIVEN GEAR	1
60	36344057	FEED MOTIPON CAM ASM	1
61	36515020	MATERIAL FEED CAM	1
62	36546024	SPRING	1
63	36613034	MATERIAL FEED ARM	1
64	36667012	FEED ECC ARM	1
65	36691022	BELL CRANK	1
66	36771079	SLIDE BLOCK LIMIT STOP	1
67	12.0010.4.025	SENSOR	1
68	70.0078.0.500	MOTOR PULLEY	1
69	70.0072.0.800	MOTOR HOLDER	1
70	08.6002.5.014	SCREW M5-14	4

UPPER LOOPER

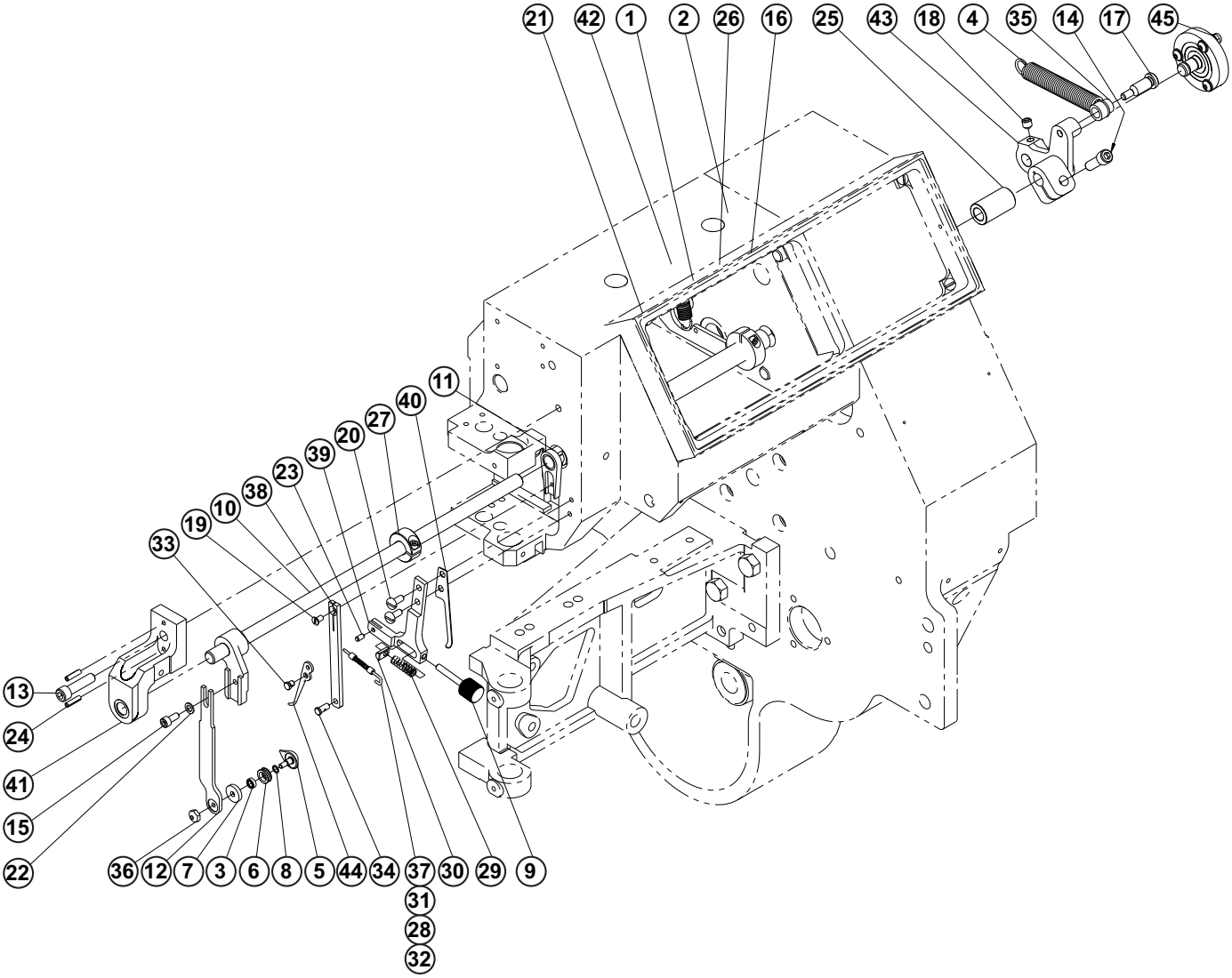

Released: 04/2024
E-mail: info@amfreece-cars.cz

UPPER LOOPER

DET	PART NUMBER	DESCRIPTION	QTY.
1	08.6852.6.000	WASHER M6	1
2	12.1015.0.005	PIN-GROOVED 8X30	1
3	12.2010.0.055	BALL BEARING	1
4	12.3011.0.006	SPRING	1
5	70.0045.0.000	UPPER HOLDER	1
6	70.0048.0.400	LOOPER ROLLER	1
7	70.0049.0.400	LOOPER ROLLER COVER	1
8	70.0063.0.400	DISTANCE WASHER	1
9	70.3121.1.016	SCREW	1
10	70.3126.8.002	LOOPER ARM SHAFT - ASSEMBLY	1
11	70.3165.1.019	RIGHT LOOPER SHAFT	1
12	70.3662.5.002	LEFT UPPER LOOPER ARM.	1
13	1000037	SCREW #1/4-20 x 1	1
14	1000093	SCREW #1/4-20 x 3/4	1
15	1002014	SCREW #8-32 x 3/8	1
16	1300029	SCREW #10-24x1/4x1/4	1
17	1300037	SCREW 1/4 -20	1
18	3140006	SCREW #1/4-20 x 1/4	1
19	4000190	SCREW #6-40 x1/4	1
20	4100054	SCREW #8-32x9.5	2
21	6220001	NUT, LOCK #10-24	1
22	7012005	WASHER FLAT #8	1
23	8000017	PIN #1/8 x 1/4	1
24	8200025	PIN 1/8 x 1/2	2
25	23132178	OILITE BUSHING	1
26	23231045	BEARING	1
27	24117010	SHAFT COLLARS	1
28	24971021	SPLING LC 018A 08	1
29	24971056	SPRING LC 029C 07	1
30	31211015	ARM STOP	1
31	31413001	RT. LOOPER ROD COLLAR	1
32	70.0069.0.100	RT. LOOPER TENSION ADJ. NUT	1
33	70.0070.0.300	RIGHT LOOPER ROD SUPPORT	1
34	31644003	STUD ROD BEARING	1
35	31722031	SLEEVE	1
36	31815017	NUT #5-40	1
37	70.0068.0.300	RT. LOOPER PUSHER ROD	1
38	32542111	PUSHER ROD ARM	1
39	33251105	FINGR SUPPORT	1
40	34378066	STOP KNOB	1
41	35521118	BRACKET	1
42	36546022	RIGHT UPPER LOOPER SPRING	1
43	36691024	CAM LEVER	1
44	37211045	RIGHT LOOPER FINGER	1
45	42241009	UPPER LOOPER CAM ROLLER ASSY.	1

WORK PLATE

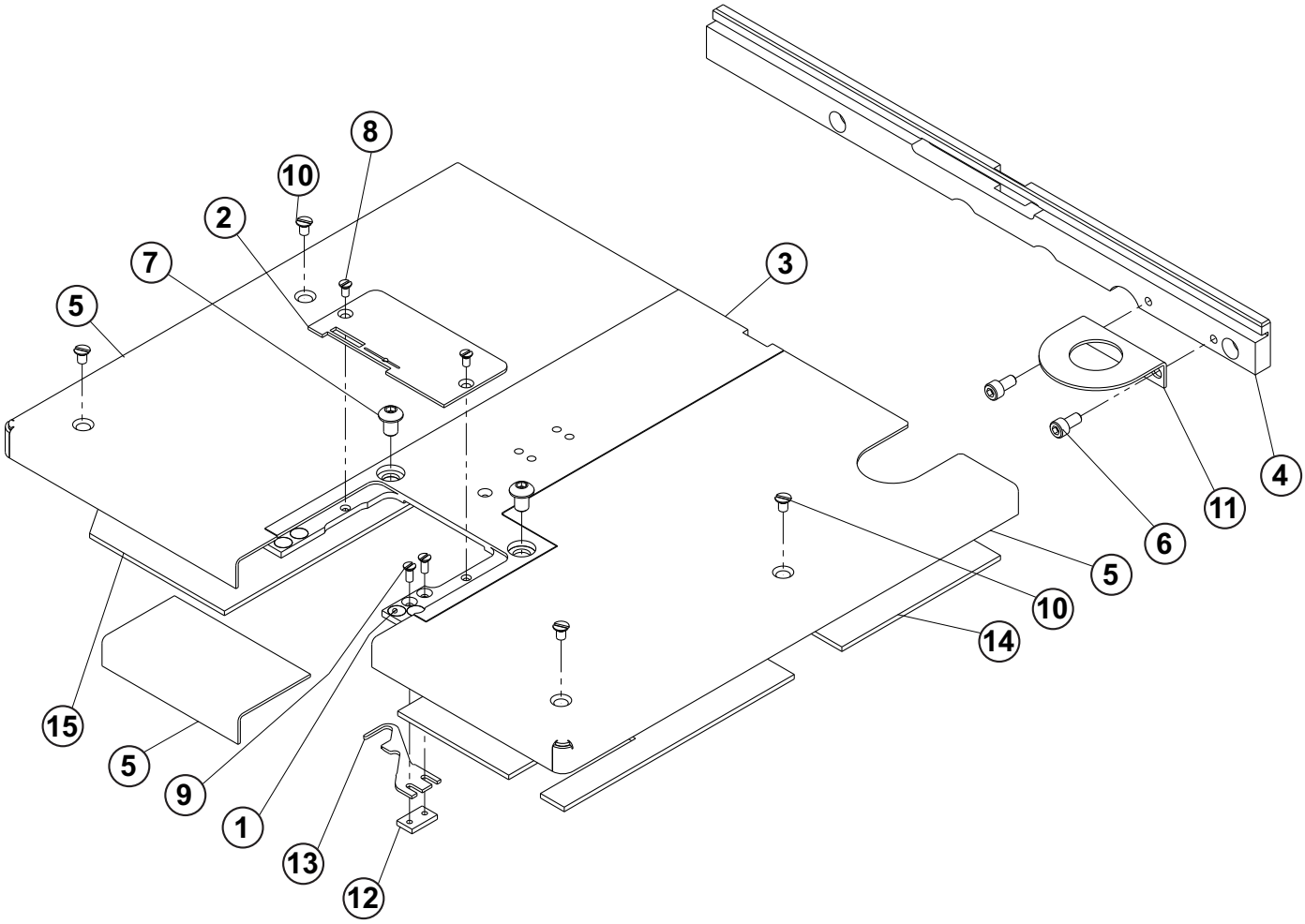

Released: 04/2024
E-mail: info@amfreece-cars.cz

WORK PLATE

DET	PART NUMBER	DESCRIPTION	QTY.
1	12.0010.6.200	MAGNET	4
2	70.3276.4.009	THROAT PLATE	1
3	70.3325.8.077	THROAT PLATE HOLDER	1
4	70.3542.1.065	TABLE REST	1
5	70.9025.0.050	TABLE	1
6	1000032	SCREW #10-32 x 3/8	2
7	1200031	SCREW #1/4-20 x 3/8	2
8	4002086	SCREW #5-40 x 3/16	2
9	4002087	SCREW #5-40 x 5/16	2
10	4002109	SCREW #8-32 x 1/4	4
11	31000052	BRACKET	1
12	32233001	FINGER CLAMP STRIP	1
13	37211133	THREAD GUIDE FINGER	1
14	70.0082.0.993	SOUND ISOLATION	1
15	70.0081.0.993	SOUND ISOLATION	1

LIGHT

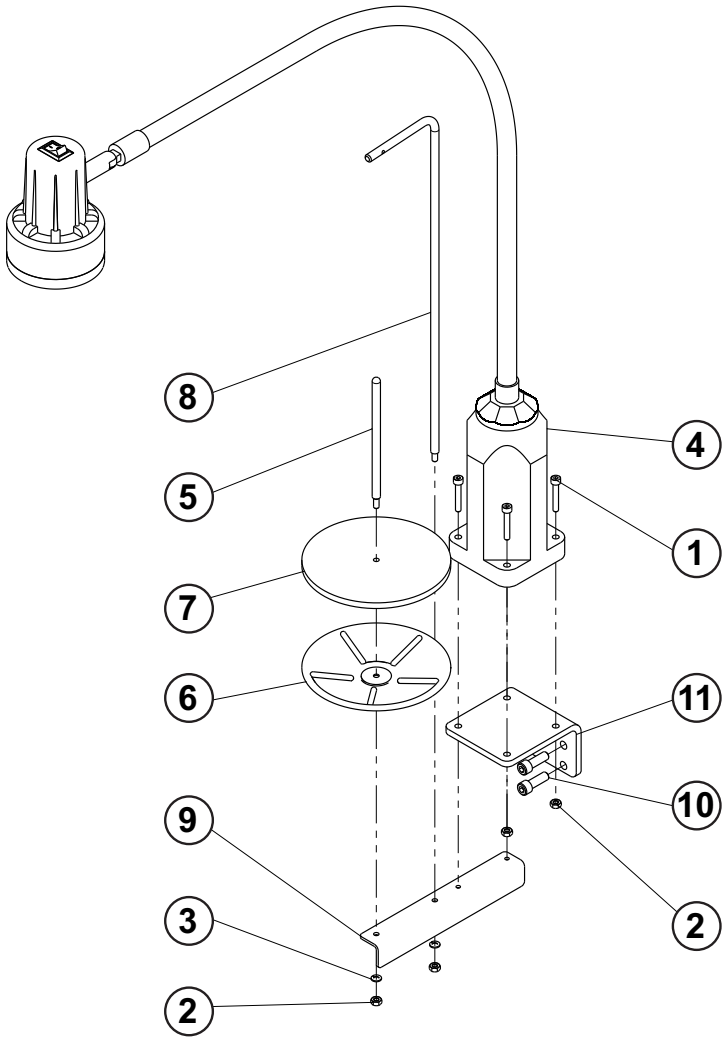

Released: 04/2024
E-mail: info@amfreece-cars.cz

LIGHT

DET	PART NUMBER	DESCRIPTION	QTY.
1	08.6000.4.025	SCREW M4-25	4
2	08.6702.4.000	NUT M4	4
3	08.6802.4.000	SPRING WASHER M4	2
4	12.0010.4.390	LAMP OBS-830 75cm SCREWS	1
5	17.0031.3.277	GUIDE	1
6	17.0083.9.031	SPOOL CARRIER	1
7	17.0095.3.042	WASHER	1
8	70.3288.2.103	THREAD GUIDE	1
9	70.3288.3.602	HOLDER	1
10	1200028	SCREW #1/4-20 x 3/4	2
11	31852010	ALEX LIGHT BKT	1

MATERIAL GAUGE

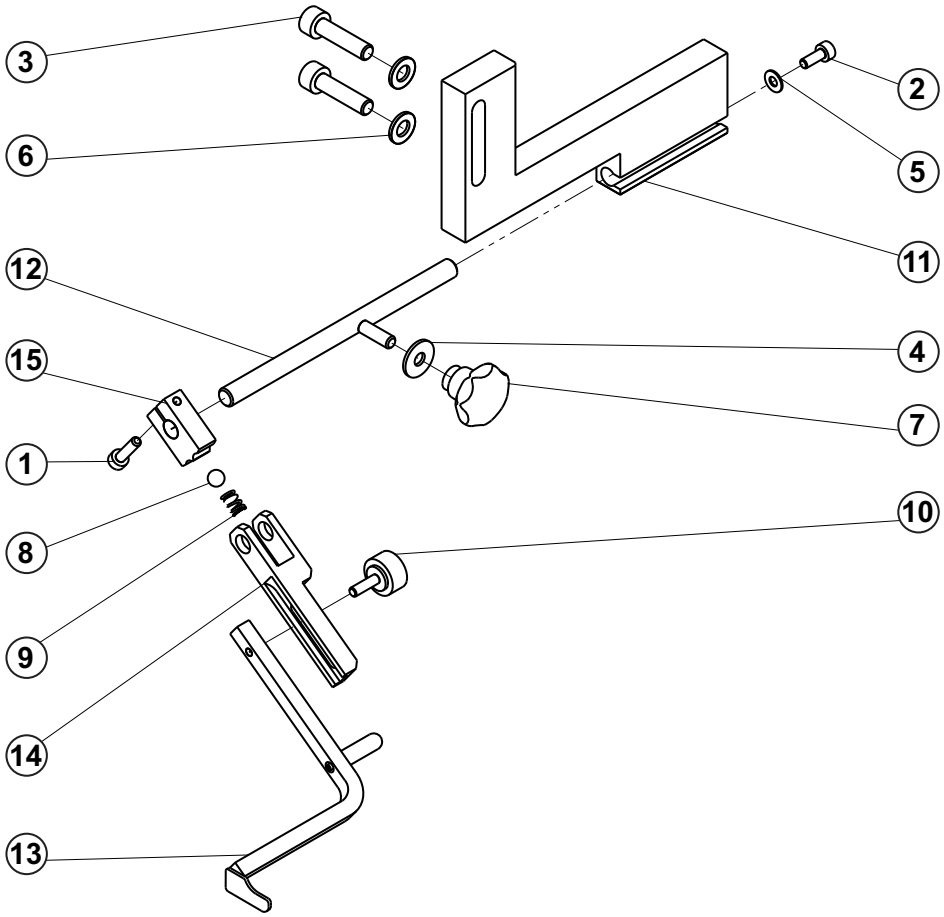

Released: 04/2024
E-mail: info@amfreece-cars.cz

MATERIAL GAUGE

DET	PART NUMBER	DESCRIPTION	QTY.
1	08.6000.3.012	SCREW M3-12	1
2	08.6002.3.008	SCREW M3-8	1
3	08.6002.5.020	SCREW M5-20	2
4	08.6842.4.000	WASHER 4	1
5	08.6850.3.000	WASHER 3,2	1
6	08.6852.5.000	WASHER 5,3	2
7	12.0008.6.919	STAR KNOB M4	1
8	12.2099.1.011	BEARING BALL	1
9	12.3010.0.020	SPRING	1
10	39.0013.3.000	SCREW M3x10	1
11	70.0060.0.600	HOLDER	1
12	70.0061.0.300	SHAFT	1
13	70.0065.0.000	ARM GUIDE	1
14	70.3325.8.092	ARM 2	1
15	70.3325.8.093	RING	1

FRONT COVER + THREAD TRIM

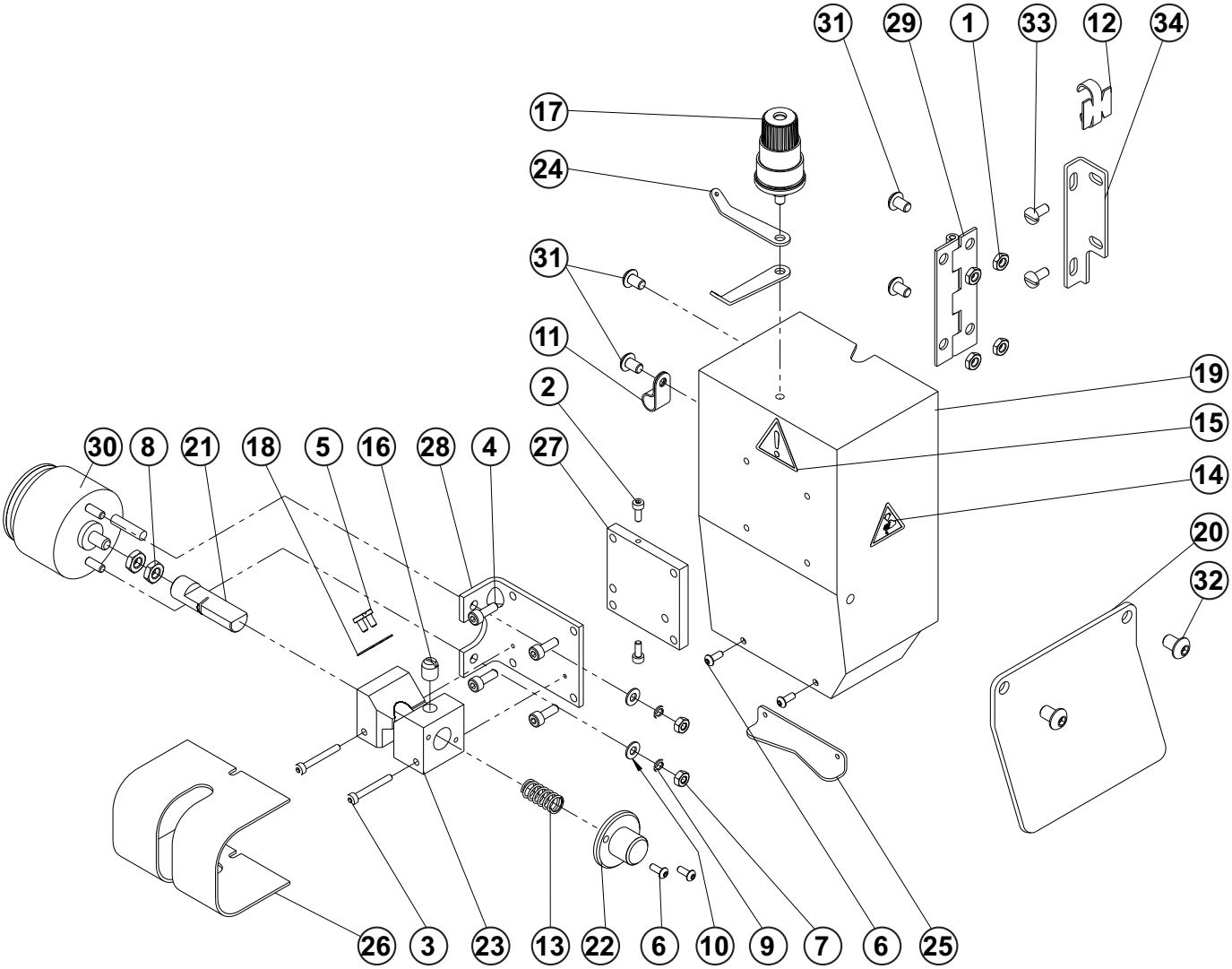

Released: 04/2024
E-mail: info@amfreece-cars.cz

FRONT COVER + THREAD TRIM

DET	PART NUMBER	DESCRIPTION	QTY.
1	01.3404.0.000	NUT 10-32	4
2	08.6000.3.008	SCREW M3-8	2
3	08.6000.3.025	SCREW M3-25	2
4	08.6000.4.012	SCREW M4-12	4
5	08.6012.3.006	SCREW M3-6	2
6	08.6200.3.008	SCREW M3-8	4
7	08.6700.4.000	NUT M4	2
8	08.6710.6.000	NUT M6	2
9	08.6800.4.000	WASHER 4	2
10	08.6850.4.000	WASHER M4	2
11	12.0008.4.280	CLAMP CABLE UCF-1,5	1
12	12.0008.4.862	CLIPS-METAL	1
13	12.3010.0.013	SPRING	1
14	12.8000.0.409	LABEL	1
15	17.0097.5.174	LABEL- WARNING	1
16	19.0011.1.400	SET SCREW M8x1-10	1
17	24.0119.0.050	TENSION DISC ASSY.	1
18	39.0087.0.000	TRIM BLADE 10-14mm	1
19	70.0059.0.600	FRONT COVER	1
20	70.2691.1.188	EYE GUARD	1
21	70.3283.2.601	CUTTING BAR	1
22	70.3284.4.101	FLANGE	1
23	70.3286.4.501	BLOCK	1
24	70.3288.2.101	THREAD GUIDE	2
25	70.3288.2.102	THREAD GUIDE	1
26	70.3288.2.104	COVER	1
27	70.3288.2.401	PLATE	1
28	70.3288.3.601	SOLENOID HOLDER	1
29	70.3577.1.053	HINGE	1
30	70.4165.1.129	SOLENOID ASSY.DECO	1
31	1200007	SCREW #10-32 x 3/8	4
32	1200031	SCREW #1/4-20 x 3/8	2
33	4100054	SCREW #8-32x9.5	2
34	41214010	BRACKET	1

FOOT SWITCH

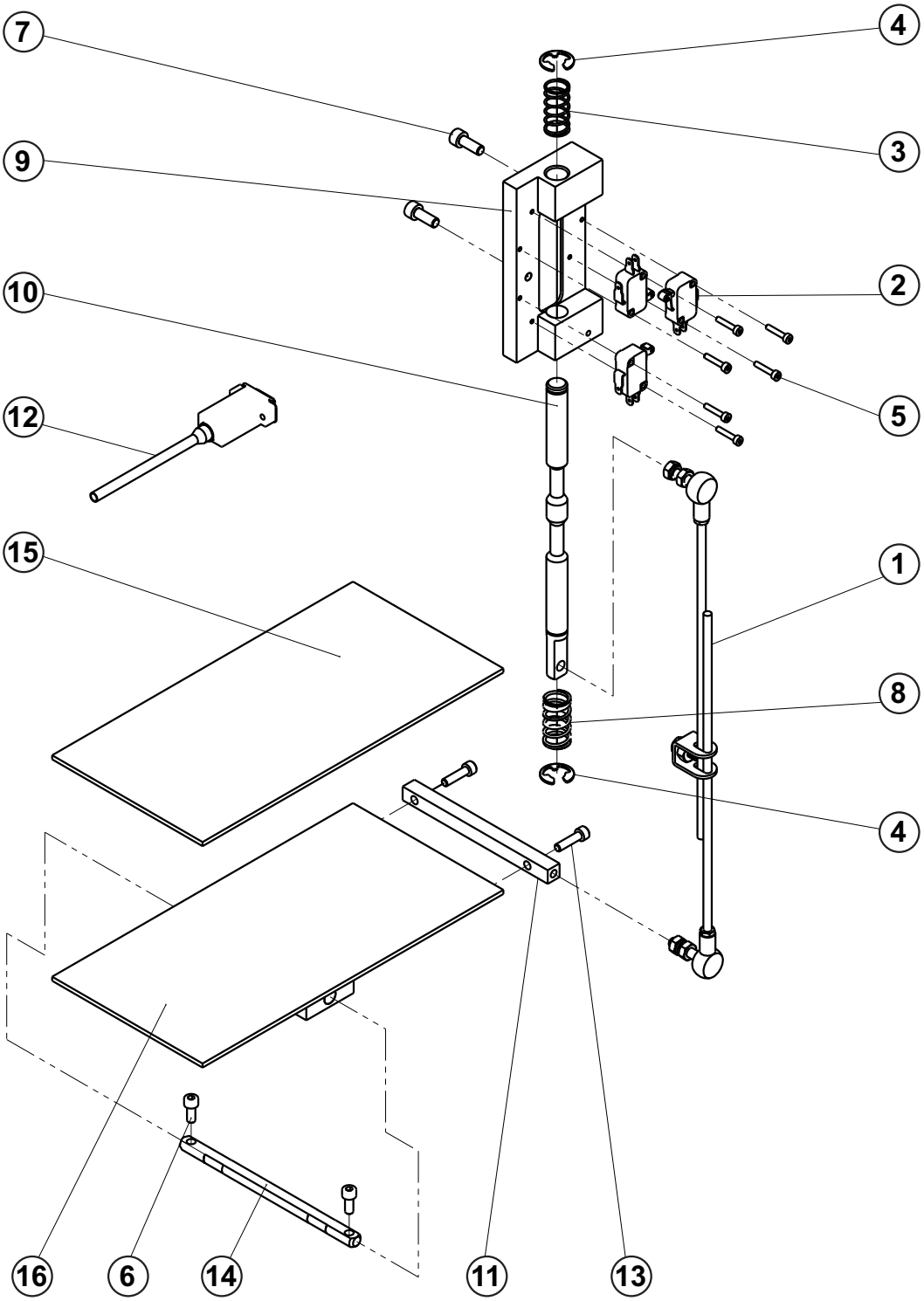

Released: 04/2024
E-mail: info@amfreece-cars.cz

FOOT SWITCH

DET	PART NUMBER	DESCRIPTION	QTY.
1	04.1956.1.000	PITMAN ROD BAL	1
2	06.0120.0.000	SWITCH-MICRO	3
3	07.6440.0.014	SPRING	1
4	07.6760.0.000	E-clip	2
5	08.6000.3.016	SCREW M3-16	6
6	08.6000.5.012	SCREW M5-12	2
7	08.6000.6.016	SCREW M6-16	2
8	12.3010.0.034	SPRING	1
9	70.3532.8.075	MOUNT	1
10	70.3532.8.076	ACTUATOR	1
11	70.3532.8.077	LEVER	1
12	70.4165.1.114	CABLE X2 ASSY.	1
13	1000019	SCREW #10-32 X 3/4	2
14	31225015	SHAFT-FOOT PEDAL	1
15	32115005	FOOT PEDAL TREAD	1
16	36617003	FOOT PEDAL	1

ELECTRICAL - I

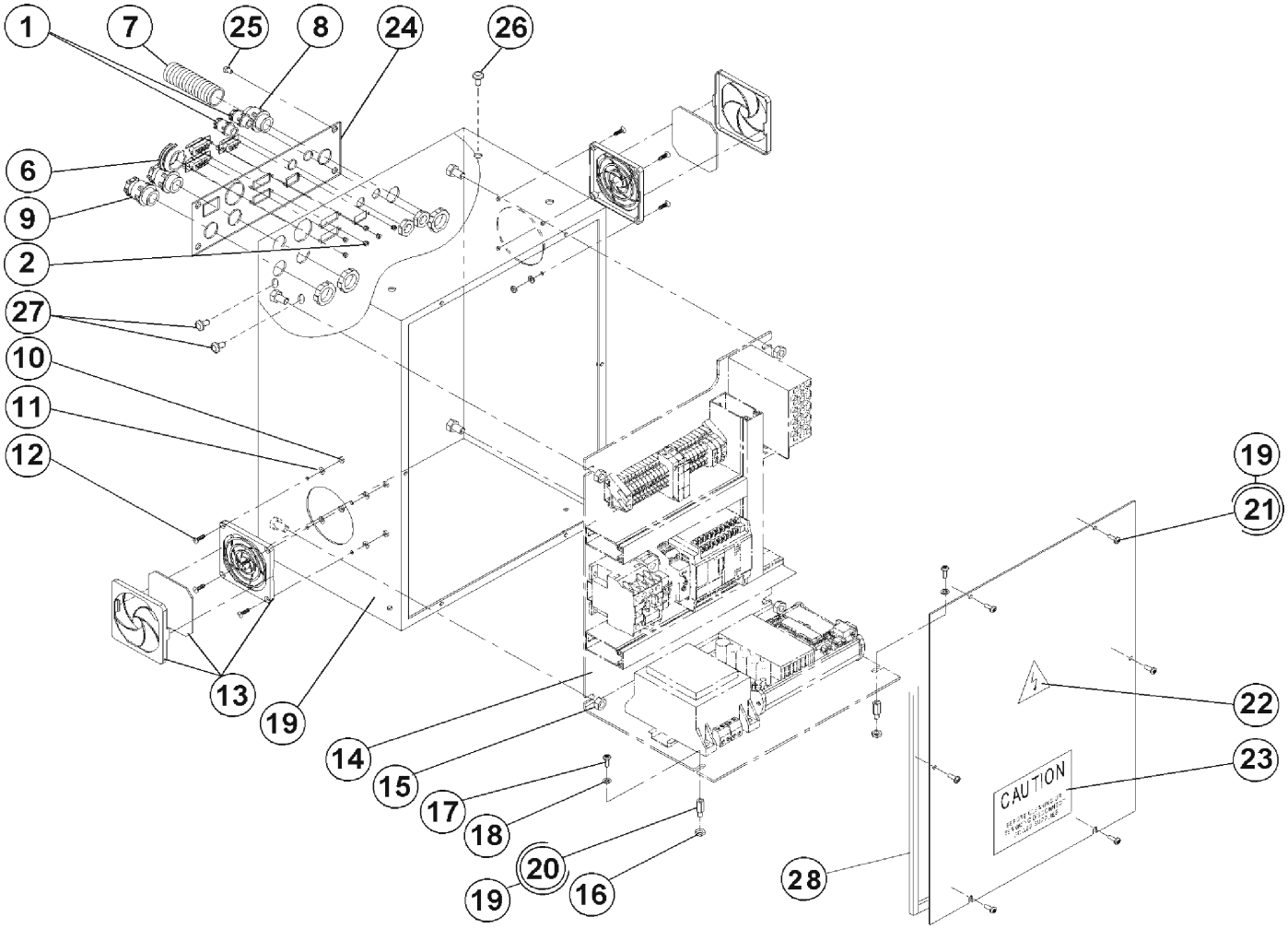

Released: 04/2024
E-mail: info@amfreece-cars.cz

ELECTRICAL - I

DET	PART NUMBER	DESCRIPTION	QTY.
1	12.0008.4.207	Bushing	2
2	12.0008.4.710	Screw	6
6	12.0008.4.366	Plug	1
7	12.0008.4.783	Tube	1
8	12.0008.4.795	Bushing	1
9	12.0008.4.231	Bushing	2
10	08.6700.4.000	Nut	8
11	08.6800.4.000	Washer	8
12	08.6100.4.014	Screw	8
13	12.0008.4.472	Fan	2
14	70.4165.1.097	Plate	1
15	08.6702.8.000	Nut	4
16	08.6702.5.000	Nut	2
17	08.6032.5.010	Screw	2
18	08.6852.5.000	Washer	2
19	70.4165.1.125	Control Box	1
20	-	Part of Assembly 70.4165.1.096	(2)
21	-	Part of Assembly 70.4165.1.096	(6)
22	12.0008.4.378	Label	1
23	00.2751.3.602	Label Caution	1
24	70.4165.1.124	Connectors Plate	1
25	08.6100.4.008	Screw	4
26	12.0008.4.215	Plug	2
27	12.0008.4.216	Plug	2
28	70.4165.1.126	Gasket	1

ELECTRICAL - II

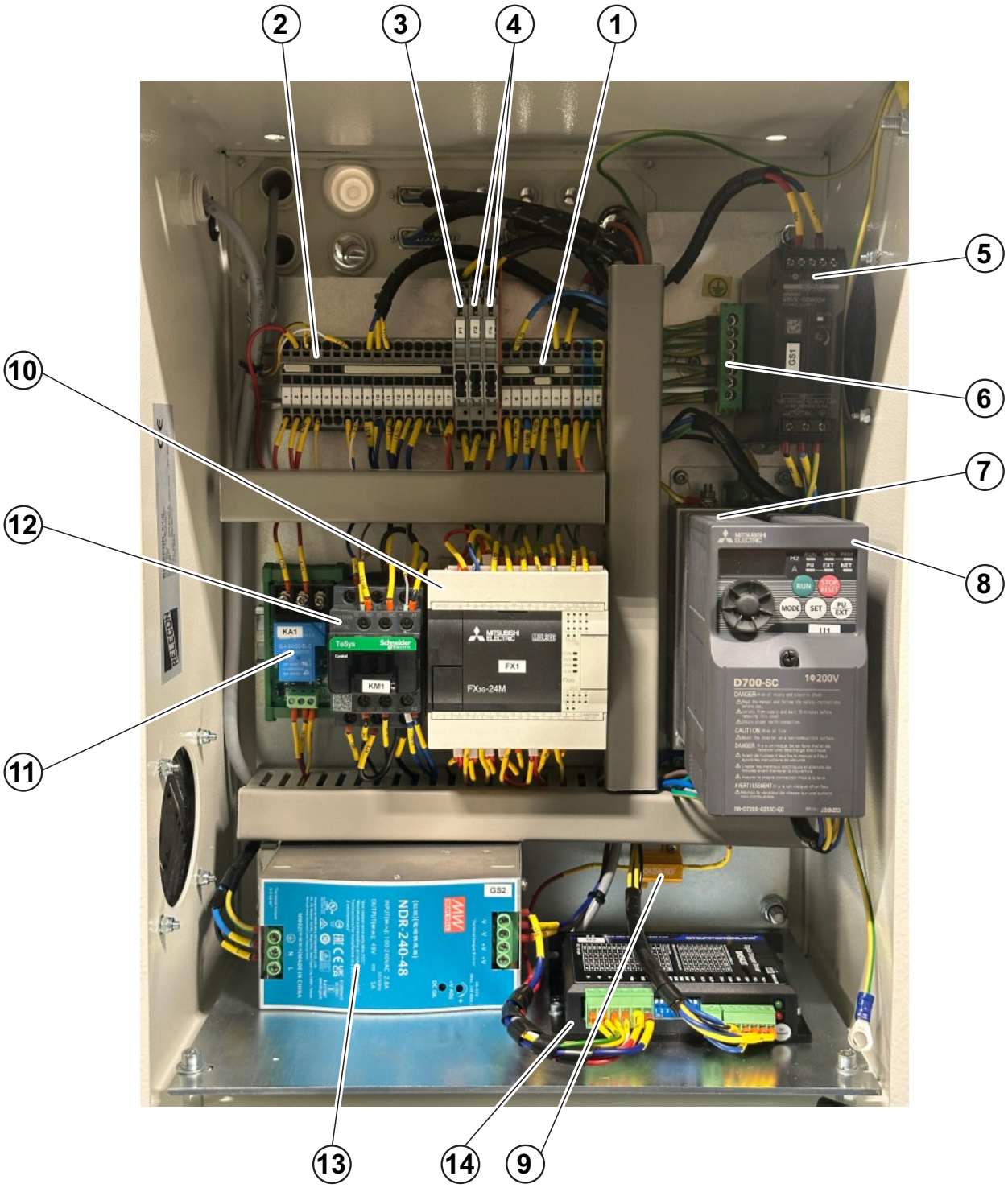

Released: 04/2024
E-mail: info@amfreece-cars.cz

ELECTRICAL - II

DET	PART NUMBER	DESCRIPTION	QTY.
1		Terminal - X0	
2		Terminal - X1	
3	12.0008.4.665	F1 - Fuse - T2A	1
4	12.0008.4.664	F2, F4 - Fuse - T10A	2
5	12.0010.4.168	Power Supply 24V - GS1	1
6	12.0008.4.050	Grounding Bridge	1
7	12.0008.4.751	Filter - F1	1
8	70.8001.1.013	Inverter - U1	1
9	06.7000.0.005	Resistor Assembly	1
10	70.8001.1.011	PLC - FX1	1
11	12.0010.4.483	Relay 24V - KA1	1
12	12.0008.4.833	Contactor - KM1	1
13	12.0010.4.440	Power Supply - GS2	1
14	12.0010.4.500	Driver Steppermotor - U2	1

ACCESSORIES

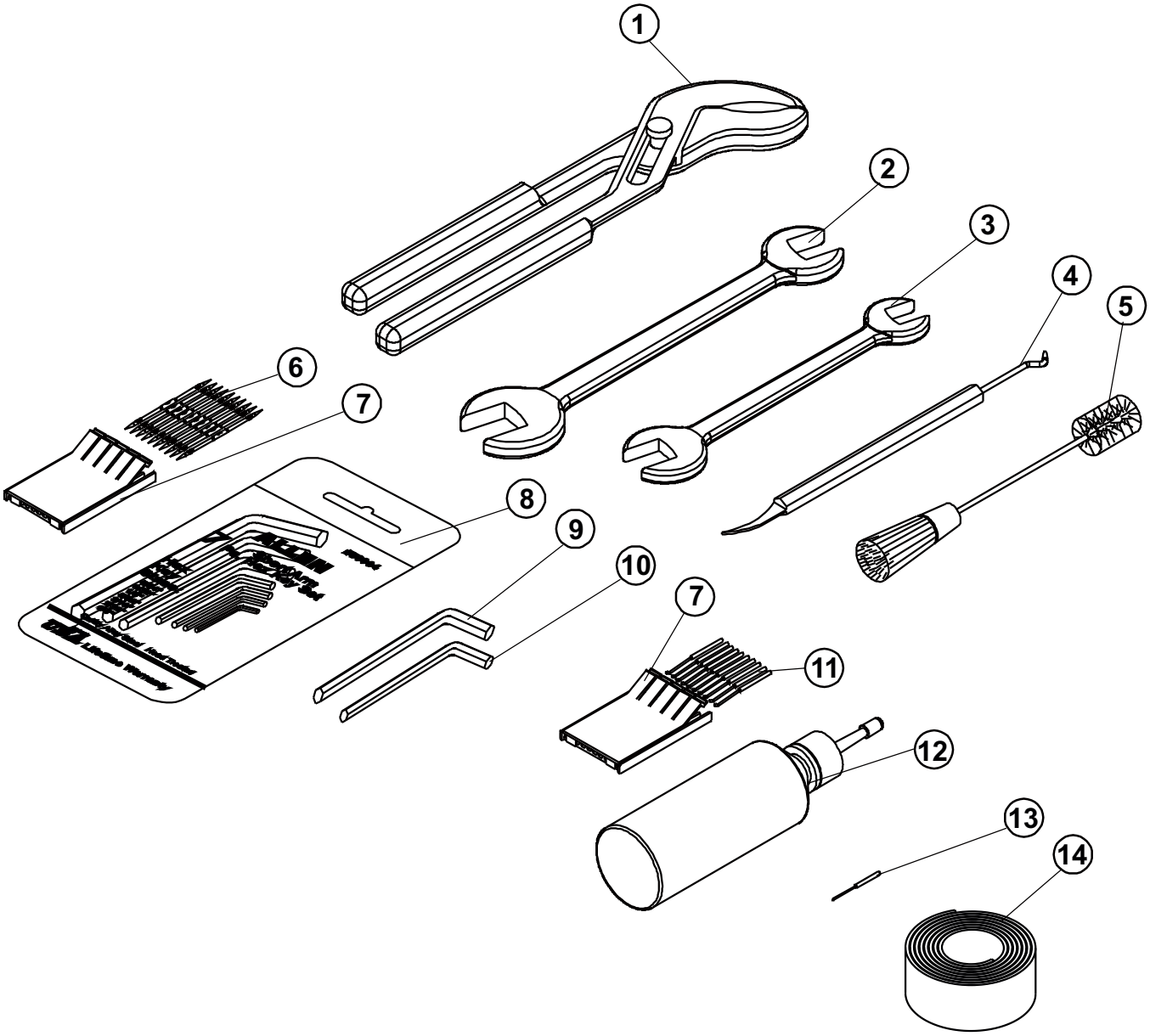

Released: 04/2024
E-mail: info@amfreece-cars.cz

ACCESSORIES

DET	PART NUMBER	DESCRIPTION	QTY.
1	26913004	Pliers	1
2	12.0008.6.118	Wrench 7/16”x 1/2”	1
3	03.0018.0.000	Wrench 3/8” x 5/16”	1
4	49910018	Cleaner	1
5	12.0008.6.975	Perk Brush	1
6	00103238	Needle	11
7	12.0008.6.968	Box Needle Short	2
8	22979050	Wrench Set	1
9	22979048	Wrench, Short Arm	1
10	22979047	Allen Wrench 7/64”	1
11	70.3721.3.002	Needle Threader	10
12	05.1322.0.000	Oil Can	1
13	49910019	Barbed Broach	1
14	70.3657.2.009	Thread belt	1

ACCESSORIES

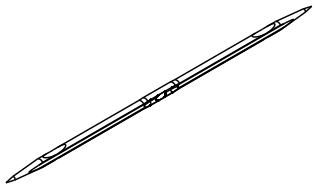

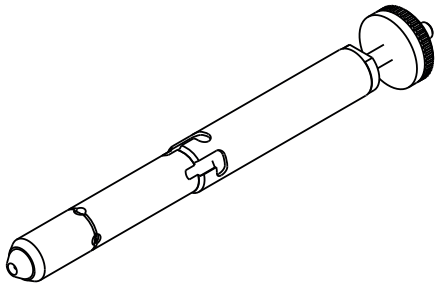

	SIZE	NEEDLE	NEEDLE BAR
✔	# 38	00103238	70.9001.0.050
○	# 49	00103249	70.9002.0.050
○	# 26	00103226	70.9003.0.050

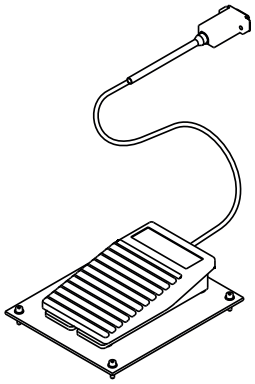

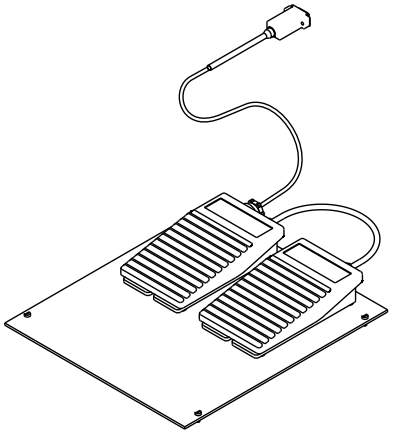

	CONDENSED STITCH KIT		FOOT PEDAL (DOUBLE)
○	03.5570.0.013	○	03.5570.0.014

✔	FACTORY SET UP
●	STANDARD ACCESSORY
○	OPTIONAL ACCESSORY

Released: 04/2024
E-mail: info@amfreece-cars.cz

INDEX

PART NUMBER	PAGE	DET	QTY
103238	3-9	13	1
00103238	3-49	8	11
1000001	3-27	9	1
1000004	3-9	14	1
1000005	3-27	10	1
1000008	3-17	45	3
1000010	3-19	17	2
1000013	3-9	15	1
1000013	3-11	2	1
1000019	3-29	17	2
1000019	3-43	13	2
1000020	3-17	46	1
1000020	3-19	18	2
1000021	3-11	3	1
1000025	3-5	41	2
1000025	3-7	16	2
1000026	3-19	24	4
1000032	3-35	6	2
1000037	3-25	5	2
1000037	3-33	13	1
1000039	3-7	17	3
1000039	3-9	16	3
1000039	3-11	4	5
1000047	3-25	6	2
1000047	3-27	11	2
1000055	3-29	18	1
1000058	3-27	12	1
1000059	3-29	19	2
1000093	3-33	14	1
1000099	3-7	18	4
1000301	3-17	47	1
1002014	3-33	15	1
1002015	3-19	19	1
1200005	3-19	20	4
1200007	3-9	17	1
1200007	3-19	21	1
1200007	3-41	31	4
1200011	3-19	22	9
1200019	3-19	23	1
1200028	3-37	10	2
1200031	3-35	7	2
1200031	3-41	32	2
1200083	3-7	19	1
1300029	3-33	16	1
1300037	3-33	17	1

PART NUMBER	PAGE	DET	QTY
3100008	3-9	18	1
3100008	3-27	13	2
3100012	3-7	20	1
3100012	3-17	48	1
3100012	3-19	25	1
3100012	3-23	4	4
3100012	3-25	7	1
3100012	3-29	20	1
3100013	3-19	26	1
3100013	3-29	21	4
3100038	3-27	14	1
3100051	3-29	22	3
3100066	3-9	19	1
3100066	3-11	5	2
3100066	3-25	8	1
3100147	3-27	15	1
3100154	3-27	16	2
3102026	3-29	23	1
3130001	3-9	20	2
3130001	3-11	6	2
3140003	3-25	9	1
3140006	3-33	18	1
3200023	3-7	21	2
4000020	3-7	22	3
4000020	3-19	27	2
4000190	3-33	19	1
4002086	3-35	8	2
4002087	3-35	9	2
4002109	3-35	10	4
4100052	3-5	42	2
4100052	3-7	23	2
4100054	3-7	24	3
4100054	3-33	20	2
4100054	3-41	33	2
4120001	3-27	17	2
4120002	3-27	18	1
4120004	3-27	19	1
4120009	3-17	49	2
4120012	3-27	20	1
4200003	3-5	43	4
4200003	3-7	25	4
4200004	3-5	44	4
4200007	3-17	50	2
4200011	3-9	21	1
4200011	3-29	24	1

PART NUMBER	PAGE	DET	QTY
4200012	3-19	28	1
4200013	3-7	26	3
4200027	3-19	29	11
4200030	3-29	25	3
4200031	3-19	30	4
4200039	3-23	5	6
4200051	3-19	31	4
4200267	3-7	27	2
4202013	3-19	32	2
6000002	3-17	51	3
6000002	3-19	33	1
6000002	3-25	10	3
6000002	3-29	26	2
6000004	3-19	34	1
6000005	3-29	27	1
6000014	3-29	28	1
6002001	3-13	1	1
6020004	3-29	29	1
6020019	3-9	22	2
6020019	3-11	7	2
6020019	3-19	35	6
6020019	3-27	21	1
6020021	3-29	30	1
6104001	3-9	23	1
6104001	3-11	8	1
6220001	3-33	21	1
7012001	3-5	45	2
7012001	3-23	6	6
7012001	3-27	22	1
7012001	3-29	31	2
7012002	3-25	11	2
7012003	3-29	32	1
7012005	3-25	12	2
7012005	3-27	23	1
7012005	3-33	22	1
7012010	3-19	36	5
7016002	3-27	24	2
7100008	3-21	73	2
7100009	3-7	28	2
7100009	3-29	33	1
7100011	3-29	34	2
7102001	3-27	25	1
7102007	3-19	37	2
7102007	3-25	13	2
8000007	3-25	14	1

INDEX

PART NUMBER	PAGE	DET	QTY	PART NUMBER	PAGE	DET	QTY	PART NUMBER	PAGE	DET	QTY
8000007	3-29	35	1	24117520	3-9	24	1	31641015	3-25	29	1
8000015	3-27	26	1	24323130	3-5	49	1	31641019	3-25	30	1
8000017	3-33	23	1	24381054	3-29	16	1	31644003	3-33	34	1
8000022	3-19	38	2	24383030	3-5	50	1	31644004	3-31	49	1
8000044	3-25	15	2	24971021	3-33	28	1	31652001	3-7	32	1
8000044	3-27	27	2	24971056	3-33	29	1	31674025	3-13	8	1
8000044	3-29	36	1	25379218	3-25	20	1	31695011	3-13	9	1
8000056	3-5	46	2	26913004	3-49	1	1	31697003	3-13	10	1
8000056	3-21	72	2	26913025	3-17	58	1	31715005	3-21	47	1
8000109	3-25	16	1	31000008	3-23	9	1	31718025	3-21	48	1
8000110	3-25	17	1	31000009	3-27	31	1	31721038	3-17	62	1
8002036	3-5	47	2	31000052	3-35	11	1	31721039	3-9	25	1
8200025	3-33	24	2	31111009	3-13	3	1	31721039	3-31	50	1
8200031	3-7	29	2	31112002	3-25	21	2	31721040	3-17	63	1
8504001	3-27	28	2	31133018	3-17	59	1	31721053	3-21	49	1
9020001	3-17	52	1	31211015	3-33	30	1	31721054	3-21	50	1
9020001	3-19	39	1	31215002	3-31	42	1	31722031	3-33	35	1
9020001	3-23	7	2	31215008	3-25	22	1	31723007	3-9	26	1
9020001	3-29	37	1	31215079	3-31	43	1	31723007	3-11	9	1
22911038	3-5	48	1	31217001	3-31	44	1	31728003	3-31	51	1
22912090	3-29	38	1	31225015	3-43	14	1	31734013	3-23	10	1
22965006	3-13	2	2	31264001	3-13	4	1	31751004	3-23	11	1
22967003	3-19	40	1	31288023	3-25	23	3	31766009	3-7	33	1
22979047	3-49	12	1	31288023	3-31	45	2	31772035	3-17	64	1
22979048	3-49	11	1	31412001	3-13	5	1	31773013	3-31	52	1
22979050	3-49	10	1	31413001	3-33	31	1	31773015	3-9	27	1
23132123	3-17	53	2	31413029	3-25	24	2	31773015	3-11	10	1
23132142	3-25	18	2	31413030	3-21	43	1	31781006	3-21	51	1
23132178	3-17	54	1	31413031	3-25	25	1	31815017	3-33	36	1
23132178	3-33	25	1	31421005	3-31	46	1	31838013	3-21	52	2
23132199	3-17	55	1	31423006	3-17	60	2	31838014	3-21	53	2
23132297	3-17	56	1	31423032	3-21	44	1	31838030	3-7	34	3
23161073	3-21	41	1	31423068	3-25	26	1	31845002	3-21	54	1
23174033	3-25	19	1	31426015	3-27	32	1	31852010	3-37	11	1
23181235	3-29	39	1	31523037	3-7	31	1	31852015	3-31	53	1
23231040	3-27	29	1	31566008	3-13	6	1	31881004	3-31	54	1
23231045	3-29	40	1	31571002	3-17	61	1	31996006	3-9	28	1
23231045	3-33	26	1	31572004	3-21	45	1	32111012	3-17	65	1
23231226	3-27	30	2	31593007	3-13	7	1	32115005	3-43	15	1
23914009	3-21	42	1	31611010	3-25	27	1	32121004	3-25	31	2
24116150	3-7	30	1	31611064	3-27	33	1	32215003	3-17	66	1
24117010	3-33	27	1	31612051	3-21	46	1	32223045	3-11	11	1
24117012	3-23	8	1	31612052	3-31	47	1	32233001	3-35	12	1
24117012	3-31	41	1	31612054	3-31	48	1	32241004	3-21	55	1
24117014	3-17	57	1	31641010	3-25	28	1	32428002	3-31	55	1

Released: 04/2024
E-mail: info@amfreece-cars.cz

INDEX

PART NUMBER	PAGE	DET	QTY	PART NUMBER	PAGE	DET	QTY	PART NUMBER	PAGE	DET	QTY
32434001	3-25	32	1	35812048	3-21	65	1	36651001	3-17	79	1
32533076	3-21	56	2	35812049	3-7	36	1	36651002	3-17	80	1
32542111	3-33	38	1	35815007	3-27	39	1	36651008	3-21	69	1
32652015	3-7	35	1	36221009	3-27	40	1	36653010	3-21	70	1
32691001	3-27	34	2	36223009	3-23	12	1	36661001	3-25	40	1
32729001	3-17	67	1	36224010	3-7	37	2	36667012	3-31	64	1
32732001	3-17	68	1	36226011	3-31	59	1	36672047	3-17	81	1
32739004	3-31	56	1	36226017	3-7	38	1	36673028	3-25	41	1
33182005	3-9	29	1	36227019	3-17	72	1	36691022	3-31	65	1
33182005	3-11	12	1	36228009	3-7	39	1	36691024	3-33	43	1
33215069	3-9	30	1	36228020	3-7	40	1	36713007	3-7	43	1
33244009	3-25	33	1	36271006	3-21	66	1	36771021	3-13	16	1
33251105	3-33	39	1	36271013	3-7	41	1	36771079	3-31	66	1
33256011	3-17	69	1	36271013	3-17	73	1	36773007	3-17	83	1
33257001	3-25	34	1	36344057	3-31	60	1	36773008	3-17	82	1
33334012	3-25	35	1	36515020	3-31	61	1	37211045	3-33	44	1
33441002	3-11	13	1	36515032	3-7	42	1	37211131	3-27	43	1
33441003	3-9	31	1	36516014	3-23	13	1	37211133	3-35	13	1
34111085	3-21	57	2	36518027	3-27	41	1	41214010	3-41	34	1
34268125	3-5	51	1	36518030	3-9	33	1	41441060	3-5	54	1
34372004	3-21	58	1	36518030	3-11	16	1	41831082	3-21	71	1
34372042	3-27	35	1	36518077	3-17	74	1	42241009	3-33	45	1
34378066	3-33	40	1	36523021	3-11	17	1	49910018	3-49	6	1
34585001	3-21	59	1	36523022	3-9	34	1	49910019	3-49	13	1
34647001	3-21	60	1	36523022	3-11	18	1	00.2751.3.602	3-45	23	1
35131002	3-13	11	1	36531010	3-13	13	1	01.2436.0.000	3-25	1	2
35225010	3-31	57	1	36532021	3-13	14	1	01.2548.0.000	3-23	1	1
35371003	3-5	52	1	36532022	3-13	15	1	01.3404.0.000	3-41	1	4
35371004	3-21	61	2	36532025	3-25	37	1	01.3549.0.000	3-3	1	1
35472011	3-5	53	1	36541005	3-17	75	2	01.7435.1.000	3-29	1	2
35511021	3-13	12	1	36541006	3-21	74	1	03.0018.0.000	3-49	5	1
35511045	3-27	36	1	36542017	3-21	67	1				
35511080	3-17	70	1	36542018	3-27	42	1	03.5570.0.013	3-53	1	1
35521048	3-9	32	1	36543018	3-17	76	1	03.5570.0.013	3-50	0	0
35521048	3-11	14	1	36543019	3-21	68	1	03.5570.0.014	3-50	0	0
35521049	3-11	15	1	36546022	3-33	42	1	04.1956.1.000	3-43	1	1
35521055	3-17	71	1	36546023	3-9	35	1	05.1322.0.000	3-49	14	1
35521118	3-33	41	1	36546024	3-31	62	1	06.0120.0.000	3-43	2	3
35523018	3-31	58	1	36613034	3-31	63	1	06.7000.0.022	3-29	2	1
35526005	3-27	37	1	36613038	3-25	38	1	06.7000.0.005	3-47	9	1
35541070	3-21	62	1	36617003	3-43	16	1	07.6440.0.014	3-43	3	1
35542007	3-27	38	1	36619044	3-17	77	1	07.6760.0.000	3-43	4	2
35551002	3-25	36	1	36621001	3-17	78	2	08.6000.0.025	3-5	57	4
35633041	3-21	63	1	36631031	3-9	36	1	08.6000.3.008	3-41	2	2
35778014	3-21	64	1	36647001	3-25	39	1	08.6000.3.012	3-39	1	1

INDEX

PART NUMBER	PAGE	DET	QTY	PART NUMBER	PAGE	DET	QTY	PART NUMBER	PAGE	DET	QTY
08.6000.3.016	3-43	5	6	08.6700.4.000	3-15	11	3	12.0008.4.665	3-47	3	1
08.6000.3.025	3-41	3	2	08.6700.4.000	3-41	7	2	12.0008.4.710	3-45	2	6
08.6000.4.008	3-15	1	3	08.6700.4.000	3-45	10	8	12.0008.4.751	3-47	7	1
08.6000.4.010	3-27	1	1	08.6702.4.000	3-37	2	4	12.0008.4.757	3-3	19	1
08.6000.4.012	3-9	1	2	08.6702.4.000	3-53	4	(4)	12.0008.4.783	3-45	7	1
08.6000.4.012	3-41	4	4	08.6702.5.000	3-3	12	2	12.0008.4.795	3-45	8	1
08.6000.4.014	3-15	2	4	08.6702.5.000	3-45	16	2	12.0008.4.833	3-47	12	1
08.6000.4.016	3-15	3	1	08.6702.8.000	3-3	13	4	12.0008.4.862	3-41	12	1
08.6000.4.016	3-53	2	(4)	08.6702.8.000	3-45	15	4	12.0008.6.118	3-49	4	1
08.6000.4.020	3-29	3	2	08.6710.6.000	3-41	8	2				
08.6000.4.025	3-37	1	4	08.6800.4.000	3-41	9	2	12.0008.6.520	3-5	56	4
08.6000.5.012	3-15	4	1	08.6800.4.000	3-45	11	8	12.0008.6.901	3-3	20	1
08.6000.5.012	3-43	6	2	08.6802.4.000	3-15	12	9	12.0008.6.919	3-39	7	1
08.6000.5.016	3-7	1	2	08.6802.4.000	3-27	3	1	12.0008.6.968	3-49	9	2
08.6000.5.016	3-15	5	6	08.6802.4.000	3-37	3	2	12.0008.6.975	3-49	7	1
08.6000.6.016	3-15	6	1	08.6802.8.000	3-3	14	6	12.0008.6.979	3-9	4	1
08.6000.6.016	3-43	7	2	08.6817.8.000	3-3	15	2	12.0010.4.025	3-3	21	2
08.6002.3.008	3-39	2	1	08.6832.4.000	3-3	16	2	12.0010.4.025	3-27	44	1
08.6002.4.016	3-15	7	1	08.6842.4.000	3-39	4	1	12.0010.4.025	3-31	67	1
08.6002.5.008	3-3	2	6	08.6850.3.000	3-39	5	1	12.0010.4.168	3-47	5	1
08.6002.5.012	3-3	3	4	08.6850.4.000	3-41	10	2	12.0010.4.390	3-37	4	1
08.6002.5.014	3-15	8	1	08.6850.5.000	3-15	13	2	12.0010.4.440	3-47	13	1
08.6002.5.014	3-31	70	4	08.6852.4.000	3-27	4	1	12.0010.4.483	3-47	11	1
08.6002.5.020	3-39	3	2	08.6852.4.000	3-53	3	(4)	12.0010.4.500	3-47	14	1
08.6002.8.010	3-3	4	1	08.6852.5.000	3-3	17	14	12.0010.6.200	3-35	1	4
08.6002.8.020	3-3	5	2	08.6852.5.000	3-9	3	1	12.0010.6.241	3-5	55	4
08.6002.8.030	3-3	6	4	08.6852.5.000	3-15	14	4	12.1015.0.005	3-33	2	1
08.6012.3.006	3-41	5	2	08.6852.5.000	3-39	6	2	12.1016.0.002	3-3	22	4
08.6032.4.008	3-3	7	2	08.6852.5.000	3-45	18	2	12.1040.1.007	3-5	58	2
08.6032.5.010	3-45	17	2	08.6852.6.000	3-29	5	1	12.1045.0.005	3-15	15	2
08.6100.4.008	3-45	25	4	08.6852.6.000	3-33	1	1	12.1050.0.014	3-5	59	2
08.6100.4.014	3-45	12	8	08.6852.8.000	3-3	18	13	12.2010.0.021	3-5	60	2
08.6102.4.012	3-3	8	6	12.0008.4.050	3-47	6	1	12.2010.0.055	3-33	3	1
08.6132.4.010	3-53	5	(4)	12.0008.4.058	3-53	8	(8)	12.2010.0.056	3-19	2	1
08.6200.3.005	3-9	2	4	12.0008.4.072	3-53	9	(8)	12.2080.0.034	3-15	16	1
08.6200.3.008	3-41	6	4	12.0008.4.207	3-45	1	2	12.2080.1.007	3-15	17	1
08.6202.5.016	3-3	9	2	12.0008.4.215	3-45	26	2	12.2080.1.008	3-15	18	1
08.6312.8.020	3-3	10	4	12.0008.4.216	3-45	27	2	12.2080.1.008	3-29	6	2
08.6400.4.005	3-7	2	4	12.0008.4.231	3-45	9	2	12.2099.1.011	3-39	8	1
08.6400.4.005	3-27	2	1	12.0008.4.280	3-41	11	1	12.2099.2.002	3-15	19	1
08.6400.4.006	3-7	3	1	12.0008.4.366	3-45	6	1	12.3010.0.013	3-41	13	1
08.6400.4.006	3-15	9	1	12.0008.4.378	3-45	22	1	12.3010.0.014	3-9	5	1
08.6400.5.008	3-29	4	2	12.0008.4.472	3-45	13	2	12.3010.0.020	3-39	9	1
08.6410.6.006	3-15	10	1	12.0008.4.595	3-19	1	1	12.3010.0.034	3-43	8	1
08.6663.5.025	3-3	11	12	12.0008.4.664	3-47	4	2	12.3011.0.006	3-33	4	1

Released: 04/2024
E-mail: info@amfreece-cars.cz

INDEX

PART NUMBER	PAGE	DET	QTY	PART NUMBER	PAGE	DET	QTY	PART NUMBER	PAGE	DET	QTY
12.4030.0.518	3-5	61	2	70.0034.0.600	3-29	9	1	70.3126.8.002	3-33	10	1
12.8000.0.034	3-3	23	1	70.0036.0.600	3-15	36	1	70.3142.3.070	3-29	12	1
12.8000.0.035	3-3	24	1	70.0037.0.600	3-15	37	1	70.3162.5.003	3-3	33	1
12.8000.0.144	3-53	10	(1)	70.0038.0.600	3-15	38	1	70.3165.1.019	3-33	11	1
12.8000.0.409	3-41	14	1	70.0039.0.600	3-15	39	1	70.3165.2.002	3-3	34	1
12.8000.1.081	3-3	25	1	70.0040.0.600	3-15	40	1	70.3165.2.003	3-7	12	1
12.8000.1.084	3-3	26	1	70.0041.0.400	3-23	3	1	70.3172.1.024	3-17	43	1
17.0011.2.013	3-7	4	2	70.0042.0.600	3-17	41	1	70.3265.2.016	3-3	35	1
17.0031.3.277	3-37	5	1	70.0043.0.600	3-17	42	1	70.3265.2.017	3-9	6	1
17.0083.9.031	3-37	6	1	70.0045.0.000	3-33	5	1	70.3271.1.021	3-19	8	1
17.0095.3.042	3-37	7	1	70.0048.0.400	3-33	6	1	70.3271.1.022	3-19	9	1
17.0097.5.174	3-21	75	1	70.0049.0.400	3-33	7	1	70.3271.1.023	3-7	13	1
17.0097.5.174	3-41	15	1	70.0050.0.300	3-19	3	1	70.3271.1.024	3-7	14	1
19.0011.1.400	3-41	16	1	70.0051.0.400	3-19	4	1	70.3271.1.025	3-9	7	1
19.0044.1.624	3-7	5	1	70.0053.0.000	3-19	5	1	70.3276.4.009	3-35	2	1
19.0044.1.625	3-7	6	1	70.0055.0.700	3-19	6	1	70.3283.2.601	3-41	21	1
24.0119.0.050	3-41	17	1	70.0056.0.600	3-25	2	1	70.3284.4.101	3-41	22	1
39.0013.3.000	3-39	10	1	70.0057.0.600	3-25	3	1	70.3286.4.501	3-41	23	1
39.0087.0.000	3-41	18	1	70.0058.0.800	3-19	7	1	70.3288.2.101	3-41	24	2
70.0001.0.000	3-3	27	1	70.0059.0.600	3-41	19	1	70.3288.2.102	3-41	25	1
70.0005.0.700	3-3	28	1	70.0060.0.600	3-39	11	1	70.3288.2.103	3-37	8	1
70.0010.0.400	3-7	7	1	70.0061.0.300	3-39	12	1	70.3288.2.104	3-41	26	1
70.0011.0.400	3-23	2	1	70.0063.0.400	3-33	8	1	70.3288.2.401	3-41	27	1
70.0012.0.300	3-15	20	1	70.0065.0.000	3-39	13	1	70.3288.3.601	3-41	28	1
70.0013.0.300	3-15	21	1	70.0067.0.000	3-3	29	2	70.3288.3.602	3-37	9	1
70.0014.0.300	3-15	22	1	70.0068.0.300	3-33	37	1	70.3288.3.604	3-19	10	1
70.0015.0.300	3-15	23	1	70.0069.0.100	3-33	32	1	70.3288.3.605	3-19	11	1
70.0016.0.300	3-29	7	1	70.0070.0.300	3-33	33	1	70.3325.8.077	3-35	3	1
70.0017.0.300	3-7	8	2	70.0071.0.800	3-3	30	1	70.3325.8.092	3-39	14	1
70.0018.0.300	3-15	24	1	70.0072.0.800	3-31	69	1	70.3325.8.093	3-39	15	1
70.0019.0.300	3-15	25	1	70.0073.0.000	3-5	62	1	70.3441.6.045	3-19	12	1
70.0020.0.600	3-15	26	1	70.0074.0.800	3-3	31	1	70.3441.6.046	3-19	13	1
70.0021.0.600	3-15	27	1	70.0078.0.500	3-31	68	1	70.3462.7.067	3-29	13	1
70.0022.0.600	3-15	28	1	70.0081.0.993	3-35	15	1	70.3532.8.075	3-43	9	1
70.0023.0.600	3-15	29	1	70.0082.0.993	3-35	14	1	70.3532.8.076	3-43	10	1
70.0024.0.600	3-15	30	1	70.0110.0.800	3-3	32	1	70.3532.8.077	3-43	11	1
70.0025.0.600	3-15	31	1	70.0114.0.500	3-5	63	1	70.3532.8.078	3-53	6	(1)
70.0026.0.600	3-15	32	1	70.0115.0.500	3-5	64	1	70.3535.1.181	3-3	36	1
70.0027.0.600	3-15	33	1	70.0116.0.300	3-5	65	1	70.3535.1.182	3-3	37	1
70.0028.0.600	3-7	9	1	70.0118.0.700	3-9	37	1	70.3541.2.031	3-27	5	1
70.0029.0.600	3-15	34	1	70.0118.0.700	3-11	19	1	70.3542.1.065	3-35	4	1
70.0030.0.600	3-15	35	1	70.2691.1.188	3-41	20	1	70.3577.1.053	3-41	29	1
70.0031.0.600	3-7	10	1	70.3100.0.019	3-29	10	1	70.3577.7.042	3-3	38	1
70.0032.0.600	3-7	11	1	70.3100.0.020	3-29	11	1	70.3634.3.063	3-29	14	1
70.0033.0.600	3-29	8	1	70.3121.1.016	3-33	9	1	70.3651.3.048	3-7	15	1

INDEX

PART NUMBER	PAGE	DET	QTY	PART NUMBER	PAGE	DET	QTY	PART NUMBER	PAGE	DET	QTY
70.3651.8.020	3-27	6	1								
70.3651.8.021	3-27	7	1								
70.3651.8.022	3-27	8	1								
70.3652.3.023	3-9	8	1								
70.3652.3.025	3-9	9	1								
70.3652.3.026	3-9	10	1								
70.3657.2.009	3-19	14	1								
70.3657.2.009	3-49	14	1								
70.3661.1.041	3-29	15	1								
70.3662.5.002	3-33	12	1								
70.3669.1.008	3-19	15	1								
70.3721.1.153	3-25	4	1								
70.3721.3.002	3-9	11	1								
70.3721.3.002	3-49	13	10								
70.3727.4.013	3-19	16	1								
70.4165.1.097	3-45	14	1								
70.4165.1.112	3-53	7	(1)								
70.4165.1.114	3-43	12	1								
70.4165.1.124	3-45	24	1								
70.4165.1.125	3-45	19	1								
70.4165.1.126	3-45	28	1								
70.4165.1.129	3-41	30	1								
70.4223.3.029	3-17	44	1								
70.8001.1.011	3-47	10	1								
70.8001.1.013	3-47	8	1								
70.9001.0.050	3-9	12	1								
70.9001.0.050	3-11	1	1								
70.9001.0.050	3-50	0	0								
70.9002.0.050	3-50	0	0								
70.9003.0.050	3-50	0	0								
70.9025.0.050	3-35	5	1								
70.9029.0.050	3-3	39	1								
70.9030.0.050	3-3	40	1								

Released: 04/2024
E-mail: info@amfreece-cars.cz