AMF® REECE

Better Ideas, Better Made

MODEL S-4000 CAED Omron

CUT AFTER EDGE

PARTS AND SERVICE MANUAL

MACHINE SERIAL No:

PART NUMBER 97.2430.2.001

07 / 2024

LIMITED WARRANTY ON NEW AMF REECE EQUIPMENT

Warranty provisions:

A ninety (90) day limited service labor warranty to correct defects in installation, workmanship, or material without charge for labor. This portion of the warranty applies to machines sold as ”installed” only.

A one (1) year limited material warranty on major component parts to replace materials with defects. Any new part believed defective must be returned freight prepaid to AMF Reece, Inc. for inspection. If, upon inspection, the part or material is determined to be defective, AMF Reece, Inc. will replace it without charge to the customer for parts or material.

Service labor warranty period shall begin on the completed installation date. Material warranty shall begin on the date the equipment is shipped from AMF Reece, Inc.

Exclusions:

Excluded from both service labor warranty and material warranty are: (1) Consumable parts which would be normally considered replaceable in day-to-day operations. These include parts such as needles, knives, loopers and spreaders. (2) Normal adjustment and routine maintenance. This is the sole responsibility of the customer. (3) Cleaning and lubrication of equipment. (4) Parts found to be altered, broken or damaged due to neglect or improper installation or application. (5) Damage caused by the use of non-Genuine AMF Reece parts. (6) Shipping or delivery charges.

There is no service labor warranty for machines sold as ”uninstalled”.

Equipment installed without the assistance of a certified technician (either an AMF Reece Employee, a Certified Contractor, or that of an Authorized Distributor) will have the limited material warranty only. Only the defective material will be covered. Any charges associated with the use of an AMF Reece Technician or that of a Distributor to replace the defective part will be the customer’s responsibility.

NO OTHER WARRANTY, EXPRESS OR IMPLIED, AS TO DESCRIPTION, QUALITY, MERCHANTABILITY, and FITNESS FOR A PARTICULAR PURPOSE, OR ANY OTHER MATTER IS GIVEN BY SELLER OR SELLER’S AGENT IN CONNECTION HEREWITH. UNDER NO CIRCUMSTANCES SHALL SELLER OR SELLER’S AGENT BE LIABLE FOR LOSS OF PROFITS OR ANY OTHER DIRECT OR INDIRECT COSTS, EXPENSES, LOSSES OR DAMAGES ARISING OUT OF DEFECTS IN OR FAILURE OF THE EQUIPMENT OR ANY PART THEREOF.

WHAT TO DO IF THERE IS A QUESTION REGARDING WARRANTY

If a machine is purchased through an authorized AMF Reece, Inc. distributor, warranty questions should be first directed to that distributor. However, the satisfaction and goodwill of our customers are of primary concern to AMF Reece, Inc. In the event that a warranty matter is not handled to your satisfaction, please contact AMF Reece office:

AMF Reece - Cars s.r.o.
Tovární 837/9c
798 11 Prostejov
Czech Republic
e-mail: info@amfreece-cars.cz

TABLE OF CONTENTS

A - INTRODUCTION
1. BASIC INFORMATION 1
2. SAFETY DEVICE AND LABELS 2
3. GENERAL MA CHINE PARTS DESCRIPTION 3
4. SPECIFICATIONS 4
5. INSTRUCTIONS FOR OPERATOR SAFETY AND MAINTENANCE 5
6. SPECIAL ACCESSORIES 6

B - MACHINE INSTALLATION
1. CONTENT OF THE SHIPPING BOX 8
2. ACCESSORIES 8
3. POWER AND AIR CONNECTION 9
4. HEAD PNEUMATIC 10
5. INSTALLATION OF THREAD HOLDER 11

C - CORRECT USAGE
1. POWER UP/HOME POSITION 12
2. NEEDLE INSTALLATION 13
3. THREADING 14

D - MACHINE CONTROLS
1. PROGRESS OF SEWING 15
2. OPERATOR CONTROL PANEL PUSH BUTTONS AND SWITCHES 16
3. THE PROGRAMING MENU STITCHING HEAD 17
4. TESTS 19
5. PROGRAM VERSION 20
6. COUNTER RESET 20
7. PARAMETER CHECKLIST 21

E - STANDARD MACHINE ADJUSTMENT
1. MACHINE HOME POSITION 22
2. ADJUSTMENT OF THE SHIFTER 22
3. PRINCIPLES FOR MA CHINE ADJUSTMENT 2
4. NEEDLE BAR 23
5. BITE 24
6. FEEDING 26
7. CLUTCH 27
8. STITCH DENSITY 27
9. LOOPERS ADJUSTMENT 28
10. HOME POSITION OF THE CLAMP PLATE 31
11. CLAMP PLATE ADJUSTMENT 32
12. TRIMMING MECHANISM ADJUSTMENT 32
13. ADJUSTMENT OF THE CLAMP PLATE CHANGE-OVER 33
14. ADJUSTMENT OF MACHINE HEAD CLAMPING FOOT 34
15. THREAD DRAW OFF 34
16. THREAD TENSION 35
17. THREAD TRIMMING 35
18. CUTS-OFF BLOW OFF 36
19. THREAD BLOW OFF (SPECIAL ACCESSORY) 37
20. ADJUSTMENT OF STOP SENSOR POSITION 37
21. REPLACEMENT OF THE BELT 38
22. PROTECTION DURING VOLTAGE FLUCTUATION (SPECIAL ACCESSORY) 39
23. OPTICAL SENSOR - ADJUSTMENT 40

Released: 06/2022
E-mail: info@amfreece-cars.cz

TABLE OF CONTENTS

F - MAINTENANCE
1. CLEANING AND MAINTENANCE OF THE MACHINE 41
2. LIST OF REGULAR SERVICES 43
3. SCHEME OF GROUP LUBRICATION 44
4. MACHINE LUBRICATION 45
5. DISPOSAL MEASURES 47

G - PNEUMATIC DIAGRAM 48

H - ELECTRICAL DIAGRAM 49

A - INTRODUCTION

1. BASIC INFORMATION

The sewing machines S-4000 CAED are designed and produced to be very reliable. Important design goals have been achieved to provide a safe machine that is simple and inexpensive to maintain.
The patented rotary needle bar shaft drive, a major benefit, delivers longer needle bar life. The added benefits of lower vibration and less noise, translate into less operator fatigue.
Simple buttonhole length adjustment located outside the machine, eliminates the need for tilt back, while the quick stop repair function delivers safety and makes repairs easier.
A halogen work light is included with the S-4000 CAED and LS, to enhance operator safety and product quality.
Special electronic and mechanical safety devices protect the operator and the machine. There is a special power lock out switch that permits the machine to be locked in the off position, so that it cannot be cycled accidentally. There is an emergency off switch. There is a low air pressure detector that will not permit machine operation if air pressure is dangerously low.
There are safety-warning labels on the machine in all areas that require special care. These must not be removed. If they are lost replace them immediately.
You are the most important safety equipment of all. Be sure you understand the proper operation of the machine. Never remove safety mechanisms or labels. We have made every effort to provide the safest possible machine, but without complete knowledge of how this machine operates, and the use of proper care by the operator, this machine can cause serious injury or death. That is why there are safety warnings throughout these instructions that carry one of these messages.

DANGER! Possible loss of life.

WARNING! Possible serious injury or machine damage.

NOTICE! Possible injury or machine damage.

We recommend that service workers from AMF Reece oversee the installation and initial training of your mechanics and operators.
The most effective safety precaution is a well-managed safety program. Be sure those who use this machine are properly trained. Never disable safety equipment.
Always wear safety goggles when operating or servicing the machine.

A - INTRODUCTION

2. SAFETY DEVICE AND LABELS

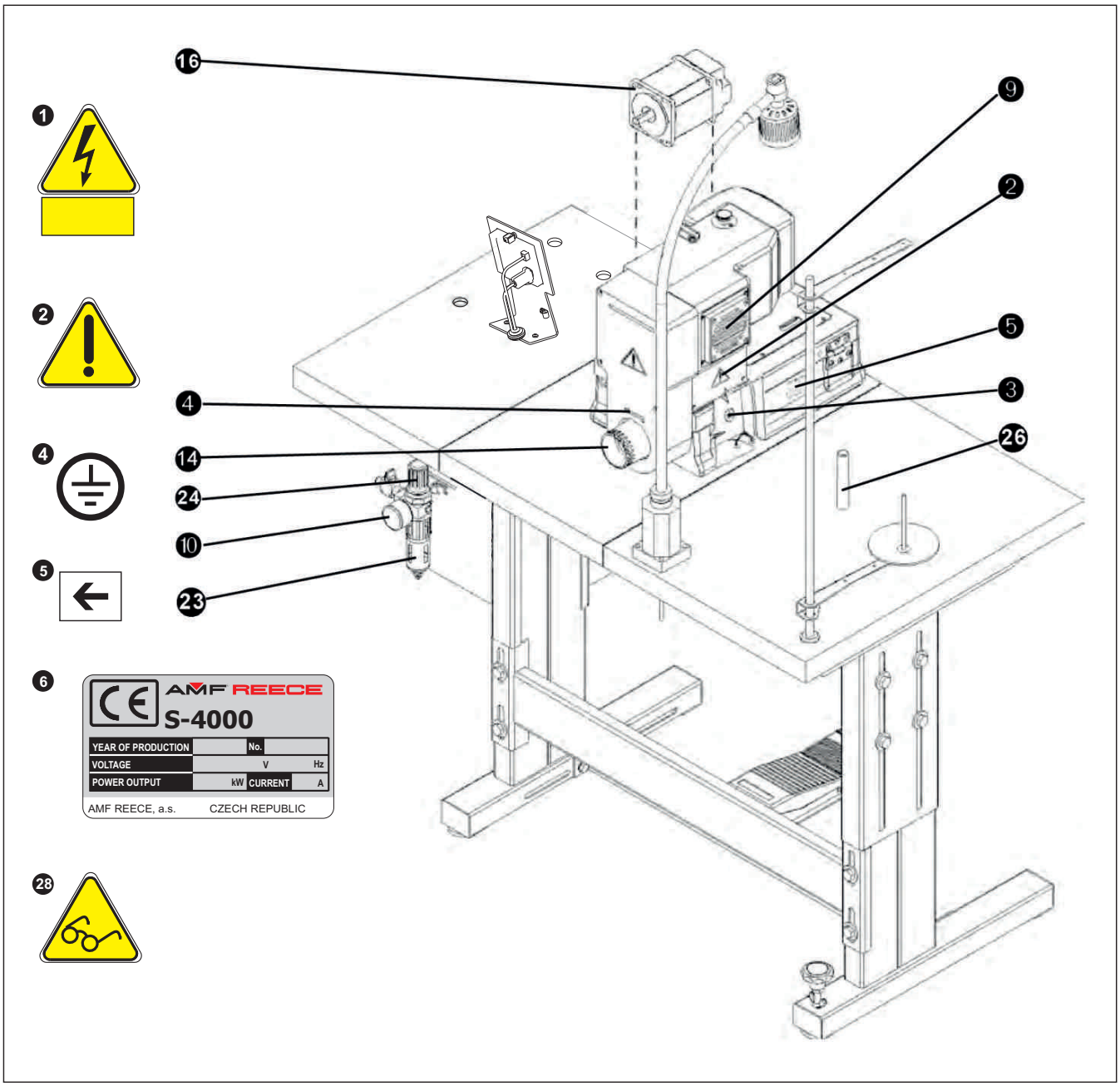

1. Warning
2. Covers removed, possible injury
3. Grounding
4. Rotational direction
5. Standard label
6. Needle bar cover
28. Wear eye protection

7. Eye guard
8. Head cover
9. Fan cover
10. Manometer with pressure sensor
11. Machine head
12. Table frame

Released: 01/2021
E-mail: info@amfreece-cars.cz

A - INTRODUCTION

3. GENERAL MA CHINE PARTS DESCRIPTION

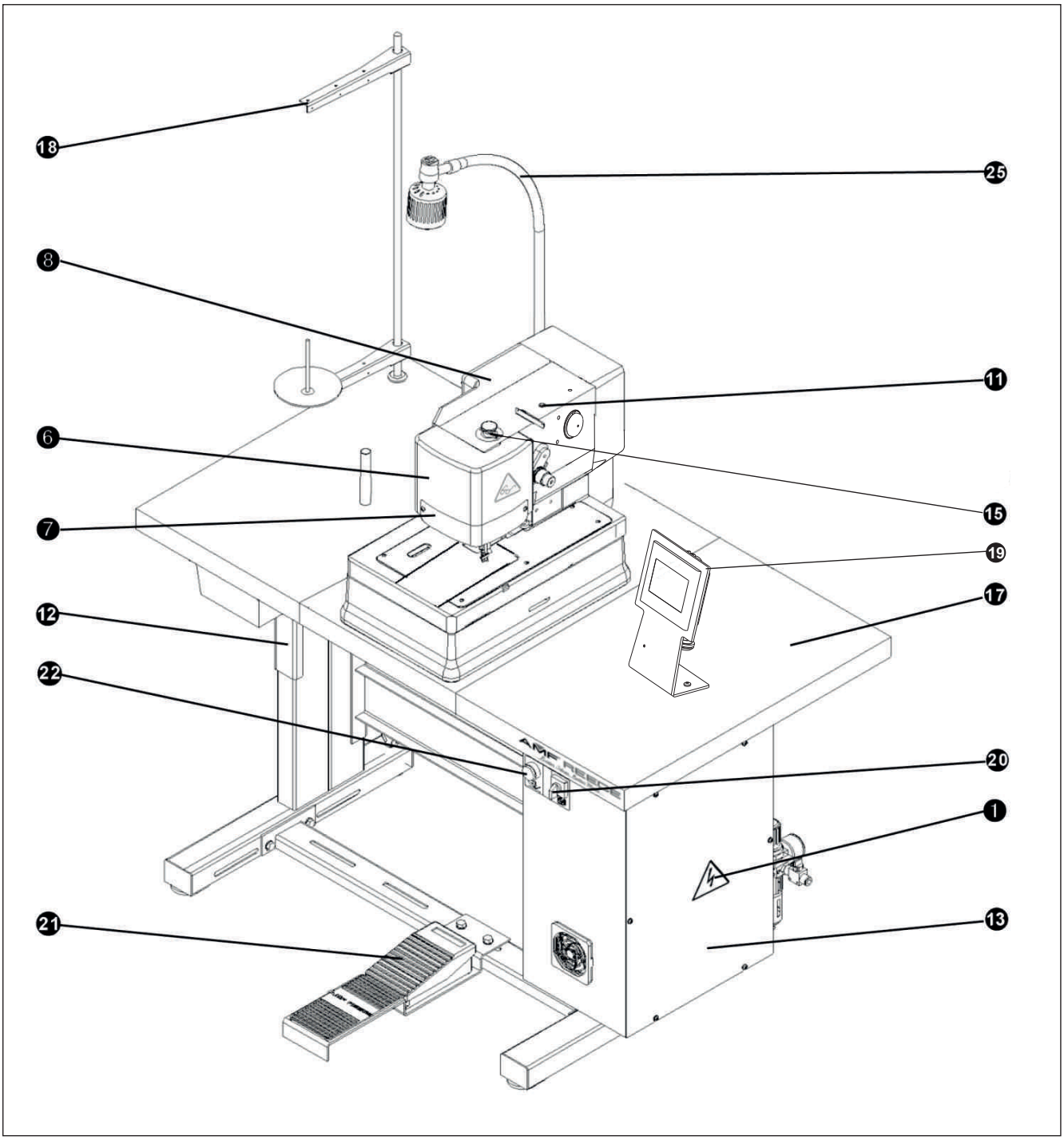

13 Control box
14 Hand wheel
15 EMERGENCY STOP button
16 Motor
17 Table top
18 Thread stand
19 Control panel
20 Main switch
21 Foot pedal
22 Clamps Up / Down button
23 Air pressure regulator
24 Air pressure adjustment knob
25 Halogen lamp
26 Rest pin
27 Warning: when opening the cover, mind your eyes!

A - INTRODUCTION

4. SPECIFICATIONS

Machine type	S-4000 CAED
Description	electronical sewing machine for clothing parts stitching with cutting after
Sewing speed	1500-3800 stitches/min
Stitch density	3-14 stitches/cm
Machine clamp foot height	12.7 mm (1/2")
Sewing length	7-50 mm
Knife length	55 mm
Maximum work thickness	to 4 mm (5/32")
Bite size	1,7 - 3,0 mm
Recommended thread	thread size 80, 100, 120 (Tex 40-60)
Needle system	Needle 750 SC 90/14, 70/10 (it is possible to order 80/12)
Lubrication	semi-automatic
Operating Conditions	according to IEC 364-3, IEC 364-5-51 temperature from +5°C to 40°C, relative air humidity from 30 to 80 %
Air pressure	0.55 MPa (80 PSI)
Machine db level	Laeg = 74dB; LWA = 87dB; LpC, peak = 103dB
Machine head dimension	340 mm (height) x 470 (width) x 250 mm (length)
Machine head length	62 kg
Table dimension	700 mm (height) x 600 mm (width) x 1100 mm (length)
Table type	Angle adjustable
Electrical Requirements	1NPE-60Hz 230V/TN-S (according to EN 60204-1) 1NPE-50Hz 230V/TN-S (according to EN 60204-1)
Line Circuit Breaker	10A charakteristic C (according to EN 60947-2) 16A charakteristic B (according to EN 60947-2)

Released: 01/2021
E-mail: info@amfreece-cars.cz

A - INTRODUCTION

5. INSTRUCTIONS FOR OPERATOR SAFETY AND MAINTENANCE

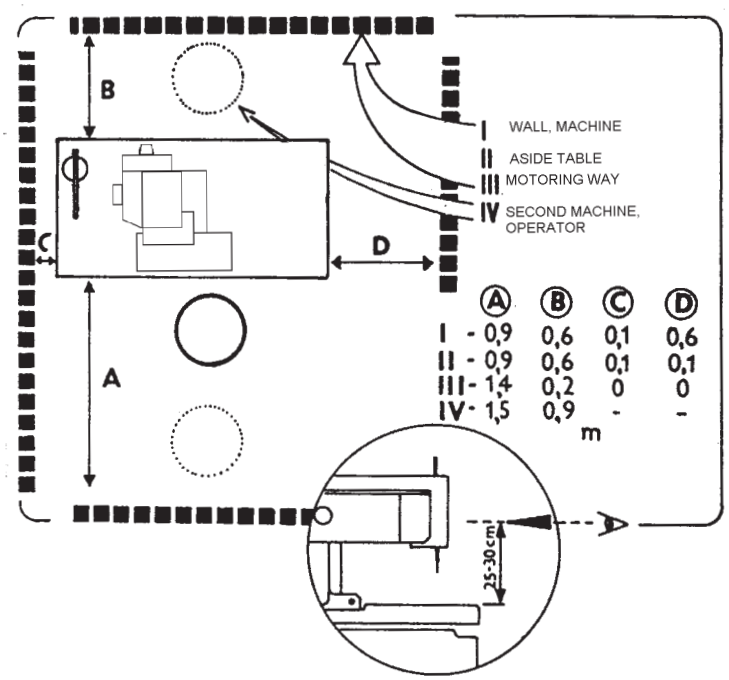

When installing the machine we recommend the minimum clearances noted above around the machine. Read all of the instructions that follow. DO NOT PUT THE MACHINE INTO OPERATION UNTIL YOU ARE COMPLETELY FAMILIAR WITH ALL INSTALLATION AND OPERATING INSTRUCTIONS.

DANGER!

- Before connecting the machine to the power supply, be positive that all safety covers are correctly installed.
- Always engage the power lockout switch, or disconnect the main power supply, before removing any safety covers.

WARNING!

- Locate the Emergency Stop button. Be sure you know how to use it.
- Be sure that you have a reliable and uniform power supply.
- Be sure that all electrical supply lines are in good condition and have no signs of damage to avoid electrical shock.
- If any covers become damaged, they must be repaired or replaced immediately.
- Do not touch moving parts of the machine while it is operating.
- Keep clear of the needle.
- Always switch off the main power before changing the needle.
- Before cleaning the machine or performing service to the machine, engage the power lock out switch or disconnect the main power supply.
- When the machine is not in use engage the power lock out switch or disconnect the main power supply.
- When this machine is used incorrectly, or is incorrectly maintained, it can be dangerous. Everyone who uses this machine, or maintains this machine, must be completely familiar with this manual.

A - INTRODUCTION

CAUTION!

- Perform all regular service as described by this manual.
- If there is any problem with the power supply, turn off the main power switch.
- Do not remove, paint over, damage or in any way change safety labels. If a safety label cnot be easily read, replace it.
- Long hair and loose clothing may be dangerous near any machinery. Always contain long hair and avoid loose clothing, so that it cannot be caught by machinery and cause injury.
- Never use this machine while under the influence of drugs or alcohol.
- If anything seems to be operating incorrectly in the machine call for maintenance assistance immediately.
- Be sure that there is adequate light for safe operation. A normal minimum light level is 750 lux.

6. SPECIAL ACCESSORIES

- Machine device, which is not included in the standard equipment of the machine and can be ordered by the customer.

Voltage guard - relay HRN 35 06.2400.0.004

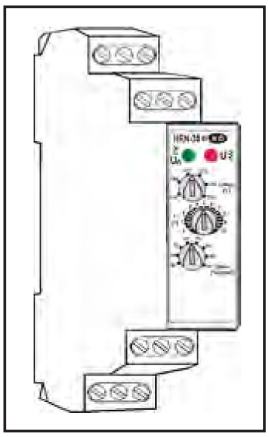

The machine operation is ensured when the power supply is i n range AC 230V ± 10 % (EN 60204-1). It is possible to equip the machine with the relay HRN-35 in case of larger fluctuation of power supply.

It prevents the machine from damage and in case of large decrease of power supply, the operator is informed by error message.

If the power supply range is exceeded - max 255V and min 185V the voltage guard -relay HRN-35 which ensures that machine does not start. After the power supply is in required range, it i s possible to start the machine.

The manufacturer recommends to use the external stabilizer in case of large fluctuation of power supply.

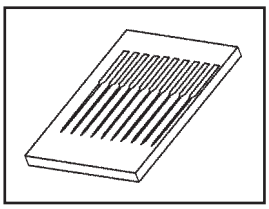

Needles 750 SC 80/12 , 90/14

- the manufacturer recommends to use these needles when sewing thin material
- part numbers 02.0750.2.100 (80/12), 02.0750.2.110 (90/14)

Released: 01/2021
E-mail: info@amfreece-cars.cz

A - INTRODUCTION

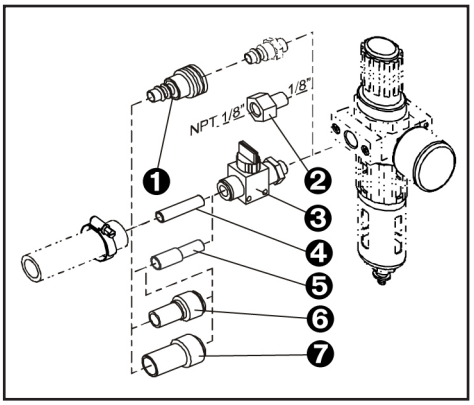

Connector Ø8 ❶
- order it if the connecting tube has the inner diameter 8 mm. The connector Ø10 is supplied with the machine.
- part number is 12.0008.3.607

Reduction ❷
- place an order in case you use connections with inch threads (order number 12.0008.3.081)

Hand valve ❸
- to dissipate any air from the machine, order it (air circuit is bled). It is necessary to order the connectors (see below) to the hand valve for connection to the air tubes.
- part number 12.0008.3.463

Connectors

❹ 12.0008.3.464 Ø8 for connection to the tube with inner Ø8 mm
❺ 12.0008.3.466 Ø10 for connection to the tube with inner Ø10 mm
❻ 12.0008.3.467 Ø12 for connection to the tube with inner Ø12 mm*
❼ 12.0008.3.465 Ø16 for connection to the tube with inner Ø16 mm*

* To connect the tube with inner Ø12 and Ø16, it is also necessary to order Ø10.

Thread Draw - Off Kit 03.5524.0.004

- order this device if you would like to use the machine for both, sewing and trimming.

without trimming

with trimming

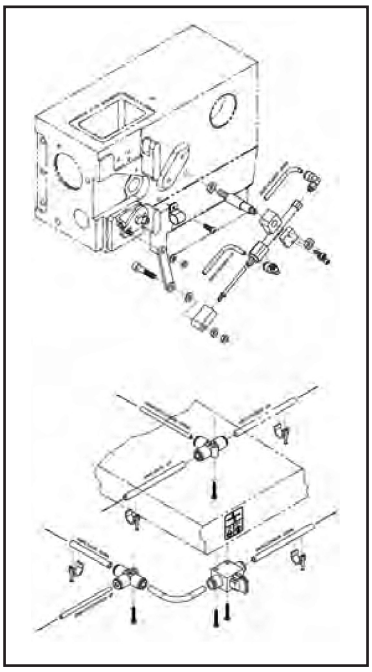

Thread Blow - Off Kit 03.5524.0.023

- the device enables thread tail at the needle to be caught above the clamping feet

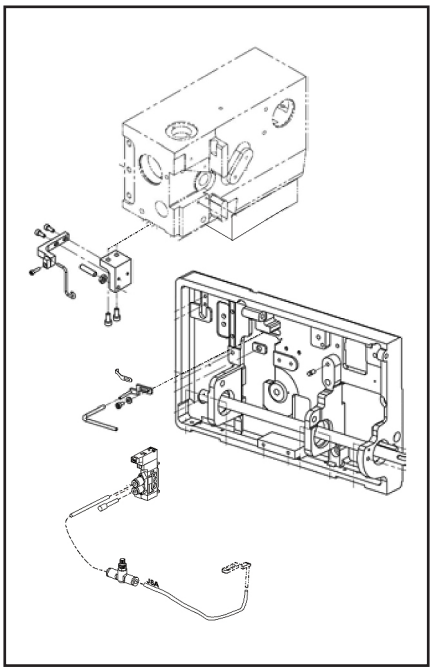

B - MACHINE INSTALLATION

1. CONTENT OF THE SHIPPING BOX

1. The shipment contains one box.
2. There is a carton with accessories, service manual with parts section and thread stand ❶ in the box.
3. During unpacking the shipment, follow the labels which are on a cover.

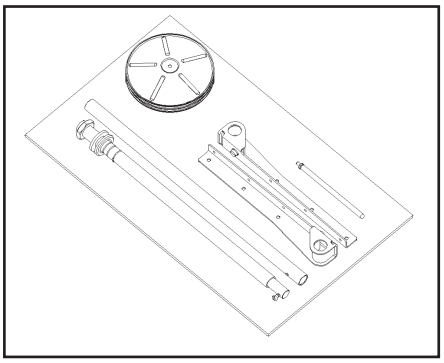

CAUTION: If the machine or crate was damaged in shipment inform the freight company immediately. Check the contents of the crate immediately and report any damage or missing items to the manufacturer immediately, late reports will not be considered!

2. ACCESSORIES

A package of accessories is supplied with the machine, please refer to page 3-48 for detailed descriptions.
The height of the working area is normally set i n range 830 - 1040 mm from the manufacturer. When using this height of the working area, recommended height of the operator seat is in range 430 - 460 mm. The height of the table can be set in range 670 - 880 mm by screws ❸.

* It i s possible to tilt the operator' s head up to 5°.

Remove the shipping strap ❷ after unpacking the machine, the use of this strap is recommended anytime the machine is transported (This is valid for all types of tables - parallel, crosswise)

STANDARD ACCESSORIES

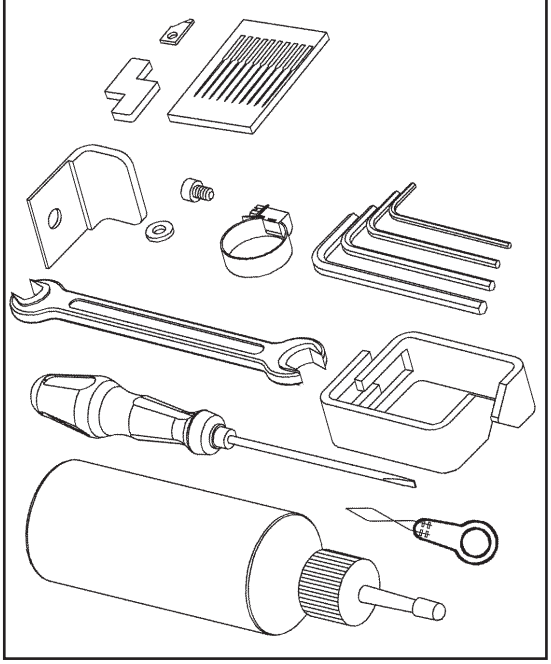

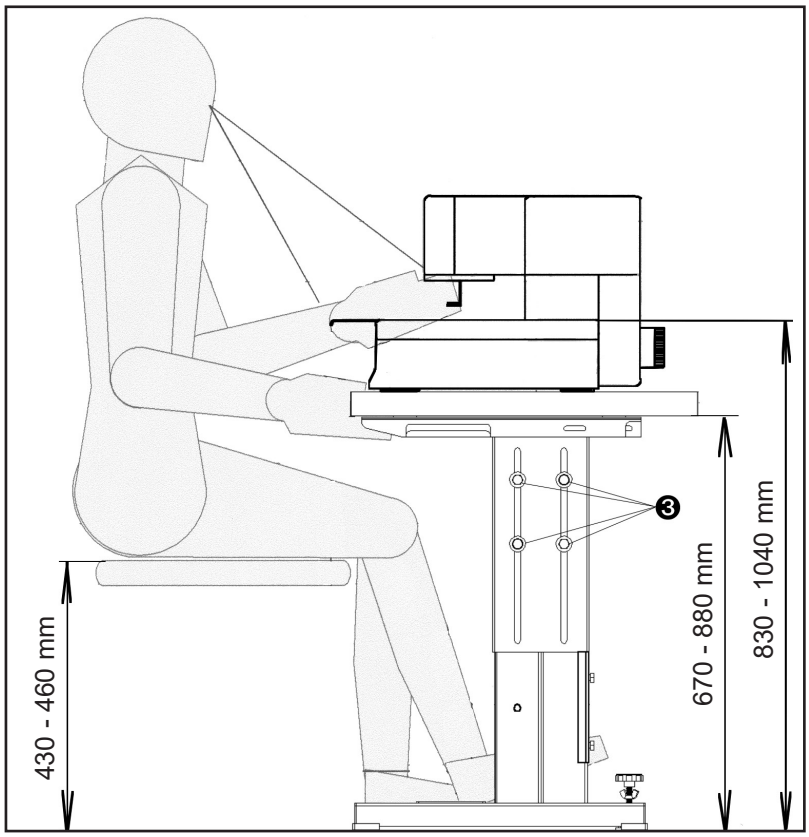

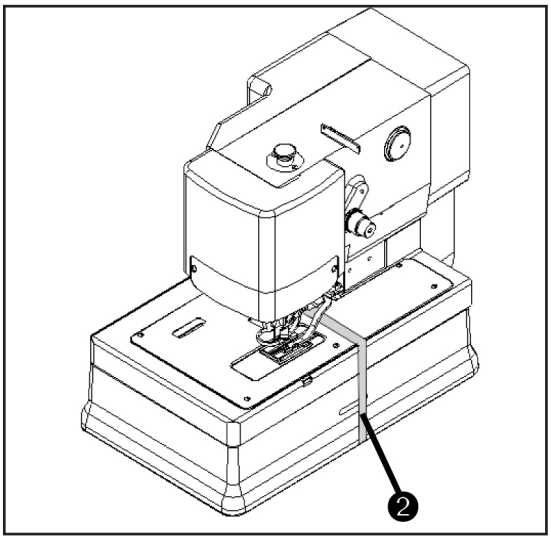

Released: 01/2021
E-mail: info@amfreece-cars.cz

B - MACHINE INSTALLATION

3. POWER AND AIR CONNECTION

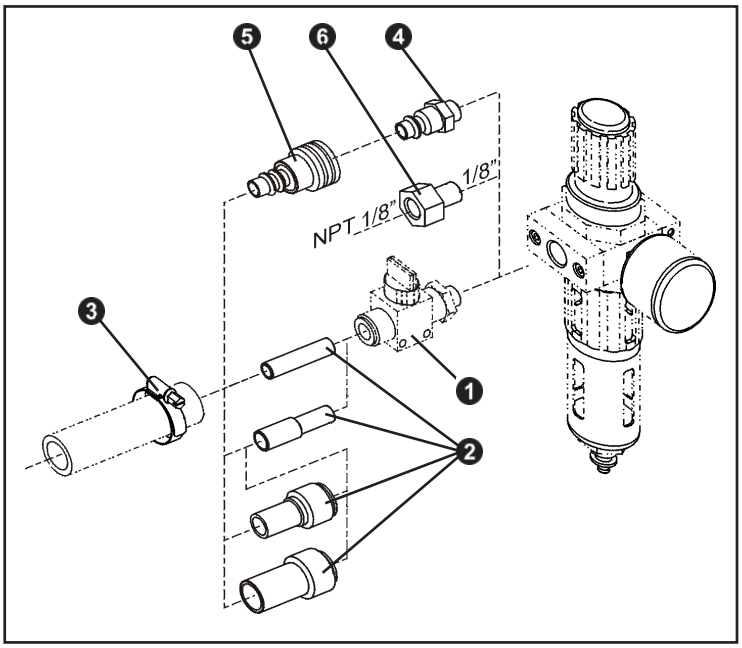

1. The machine is equipped with a quick coupler ❹ required with connector ❺ for inner Ø of the tube 10. The connector for inner Ø of the tube 8 is not supplied with the machine, a customer has to order it. The manufacturer recommends to use connector ❻ for customers who requires to connect the tube with connector NPT.
If a customer needs to use a shut off valve ❶, which allows fast releasing of the air from the circuit, he must order it. A variety of connectors ❷ can be used separately or in combination to adapt to the available input supply hose. It depends on type of the tube which is used by a customer.
These connectors are not included in the accessories. A tubing clamp ❸ is provided.

NOTE: Parts ❶, ❷, ❺, ❻ are included in Extra Parts - see 3-48.

2. After air connection check the set air pressure on the dial of the regulator. It should be i n range 0.5 - 0.6 MPa. The green pointer ❼ indicates the lowest working air pressure 0.5 MPa, which is set from the manufacturer on the regulator ❽. If the ai r pressure i s lower than 0.5 MPa after connecting the machine to the power supply, „Low Pressure“ message appears on the control panel display. To adjust the working pressure, loosen the regulator cap lock ❿ and turn the regulator cap clockwise to increase the pressure. Push the regulator cap ❿ down. The LED ⓫ is for setting the minimal operation air pressure.

3. Power supply must be 230 volts. Receptacle plug must meet requirements of IEC standard 364-4-41, its circuit breaker must be minimal 10A with characteristic C according to the EN 60947-2 (or 16A with characteristic B). No other devices must not be connected to the circuit breaker of the socker. The hand wheel ⓬ must turn counter clockwise.

The machine is equipped with a filters which contain capacitors which generate an high frequency leakage current. In order to prevent nuisance tripping, residual current protection device must be protected against these high frequency currents: this is the case for industrial residual current device (example „S“ type).

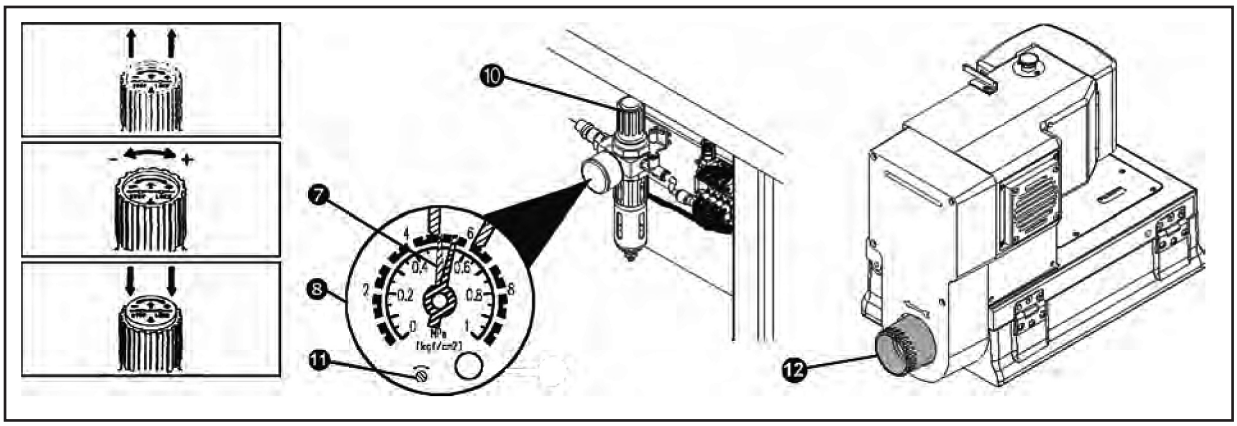

B - MACHINE INSTALLATION

4. HEAD PNEUMATIC

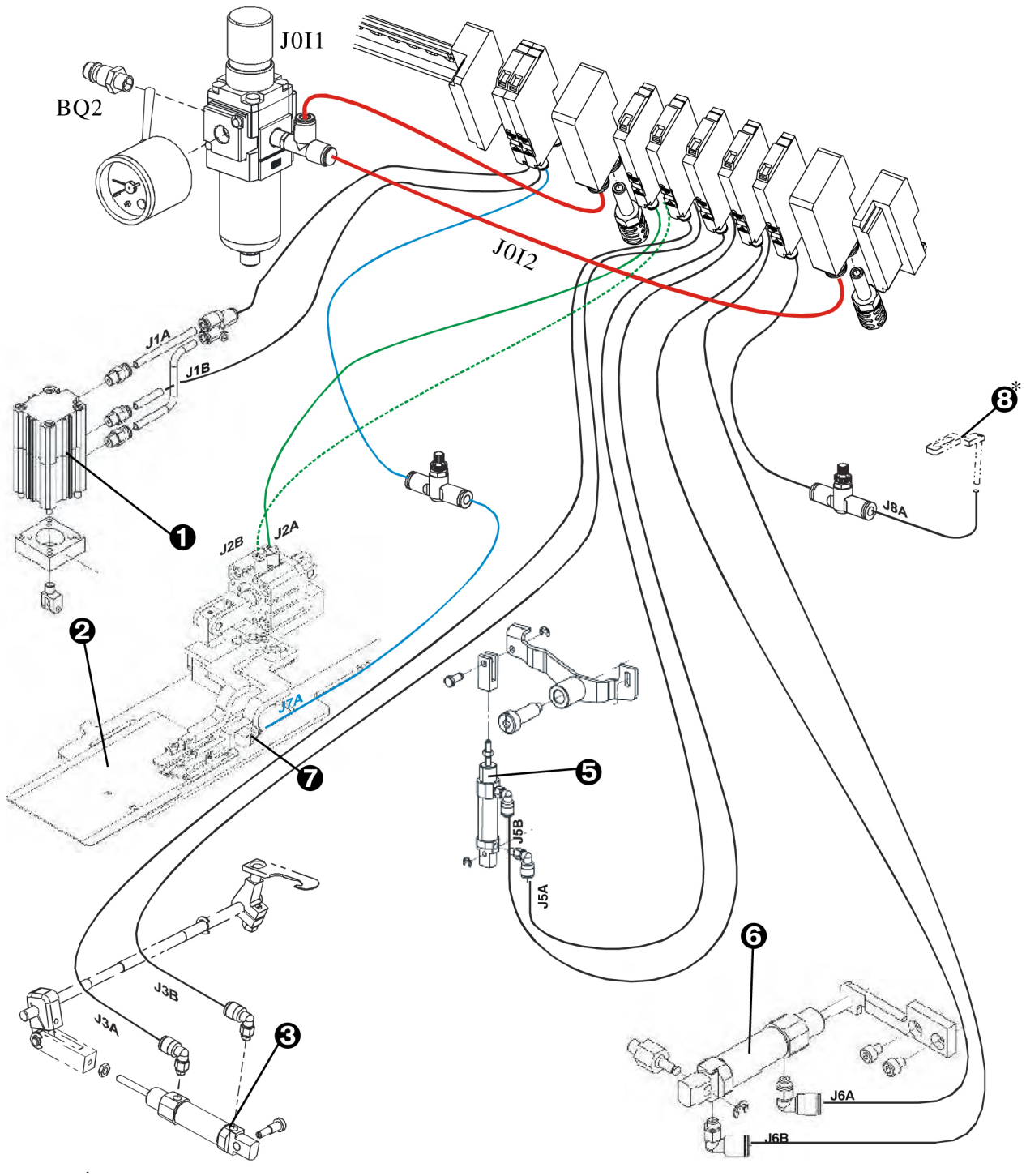

1 cutting
2 clamping feet
3 thread trimming
5 shifti ng clamping plate
6 changing the direction of sewing
7 blowing off the cut materi al
8 loopers, thread blow off (*Extra parts)
J0I1; J0I2 - air input
BQ2 - manometer with pressure sensor

MARKING OF HOSES

J X X X
- air supply
- 1, 2 — X => marking of pneumatic cylinder
- 1, 2 — X => auxiliary line
- **A**= supply; **B**= return line; **I**= valve supply

Released: 01/2021
E-mail: info@amfreece-cars.cz

B - MACHINE INSTALLATION

5. INSTALLATION OF THREAD HOLDER

1. Put the thread holder together as per the drawing.
2. Position of the ring ❶ enables assembly of the complete holder onto tables with different thickness of the tabletop. The end of the rod with threads ❻ shall not overtop the nut more than 1 mm.
3. Once the ring ❶ is positioned, insert the mat ❷ with the groove towards the ring; place the rod into the opening in the tabletop ❸ (on the right at the back). Tighten the nut ❺ with the mat ❹ underneath

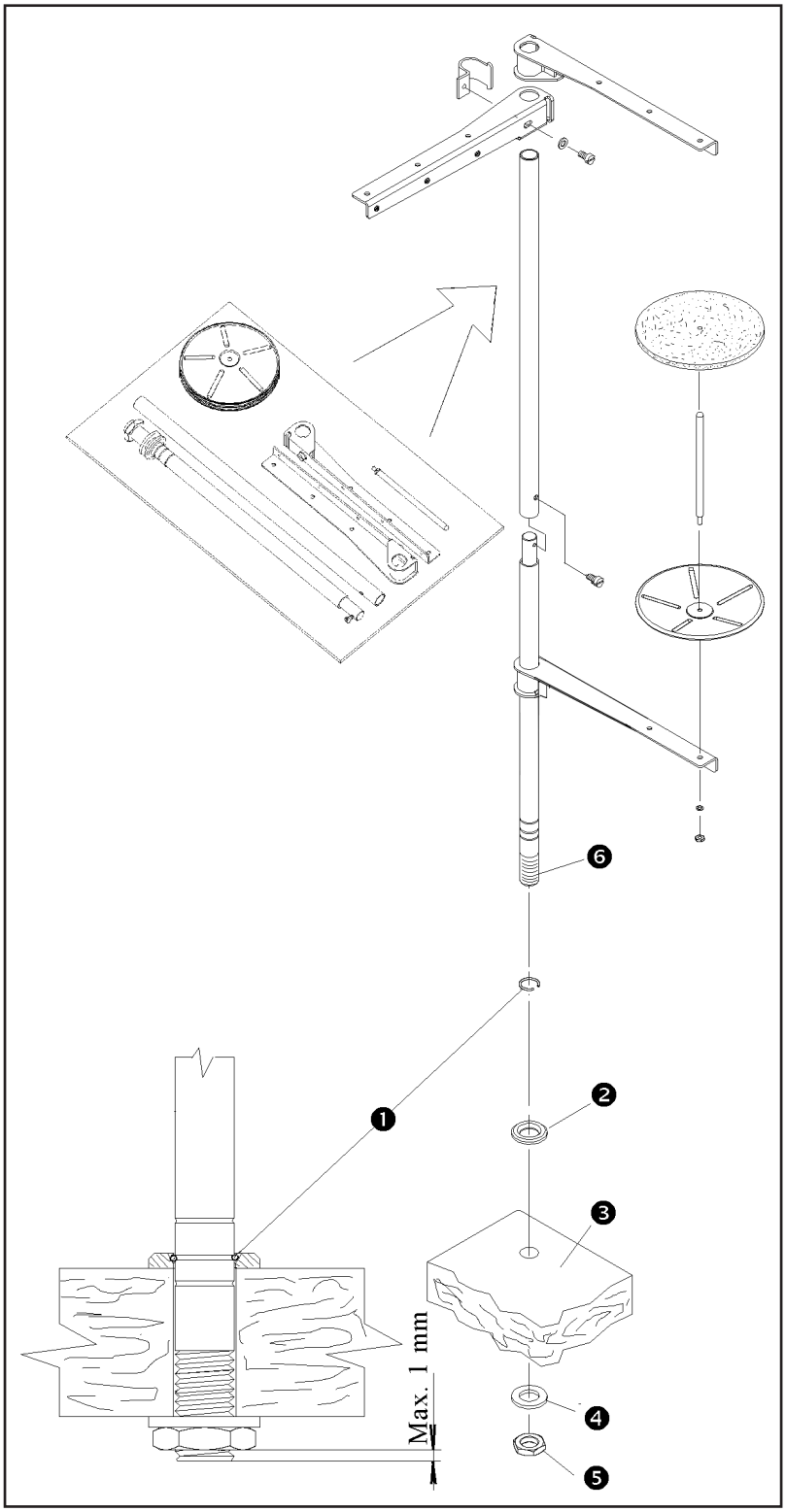

C - CORRECT USAGE

1. POWER UP/HOME POSITION

1. Turn the main power switch on ❶ by turning clockwise to the **I** position.

2. The display is illuminated for a moment and the screen shows the model number.

3. The machine is ready for operation when the Ready message appears on the display and the green LED lights.

The machine must be in the home position before starting to sew (to be certain, press the foot treadle and sew one buttonhole).

4. It i s possible to install the power voltage control (Voltage monitoring relay HRN 35) into the machine control system. This power voltage control cautions a machine operator if the supply voltage is not in the required range (185V - 255V) and the machine could be damaged - see section E19.

Note: The power voltage guard is installed in the machine only if a customer has ordered it with the machine.

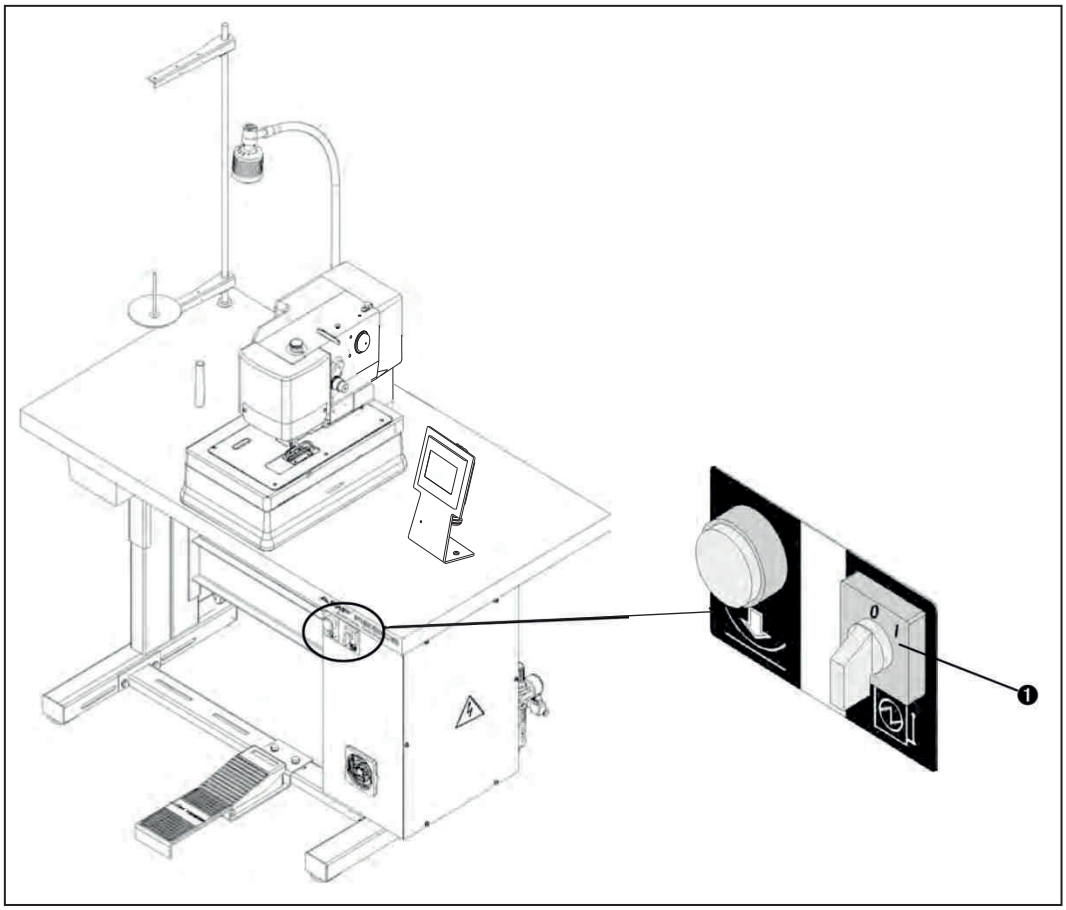

Released: 01/2021
E-mail: info@amfreece-cars.cz

C - CORRECT USAGE

2. NEEDLE INSTALLATION

WARNING! Before doing this adjustment, switch the machine off and let the remaining compressed air from the machine out.

For thin fabrics the machine uses needles order number 02.0750.2.109 (750 SC 70/10— Groz-Beckert) as standard and for thicker fabrice needles order number 02.0750.2.110 (750SC 90/14— Groz-Beckert) – see accessories. It is possible to use needles order number 02.0750.2.100 (750 SC 80/12 - Groz-Beckert) for thin fabrice – these needles are not in a standard accessory kit.

1. Using the screwdriver push the latch ❶ and open the needle bar cover ❷.
Note: The accessories contain the lever ❺ (part number 22.0213.0.000) and screw (part number 08.6000.4.005) with washer (08.6850.4.000) ❻, which i s possible to fit to the latch. It allows opening of the cover without using the tool.

2. Loosen the screw ❸ and remove the needle.

3. Insert the new needle so that the long thread groove ❹ is in the rear and the spot for the clamping screw ❸ is in line. Do not install a bent or broken needle. Roll the needle on a flat surface to check for straightness.

4. Tighten the screw ❸ well.

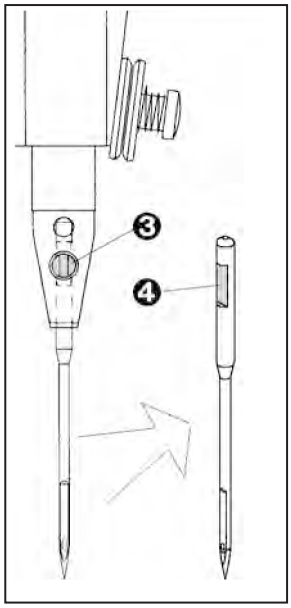

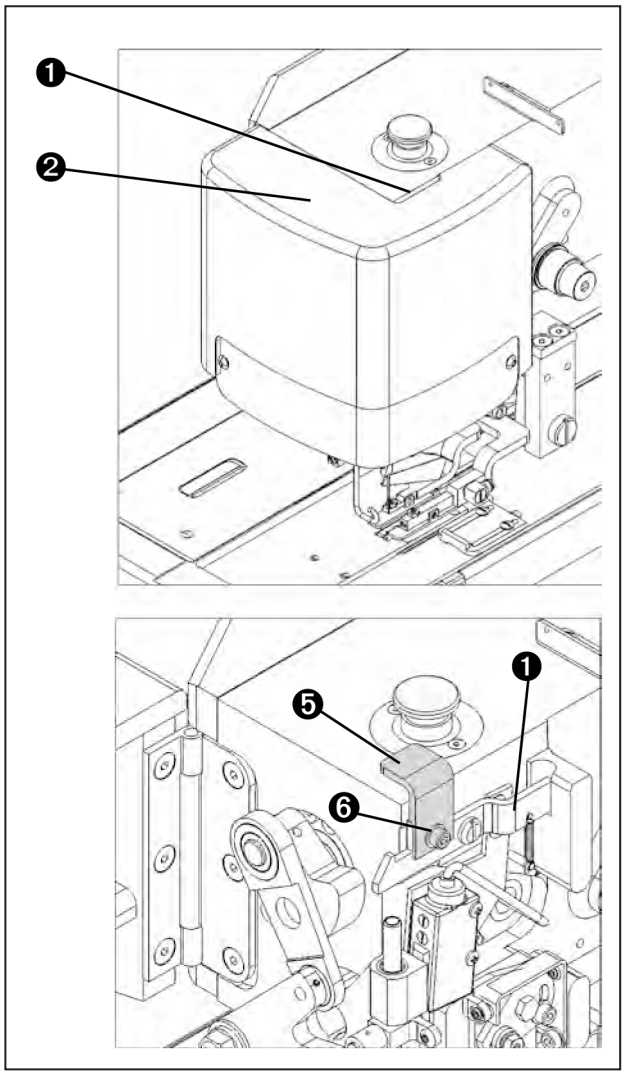

C - CORRECT USAGE

3. THREADING

WARNING! Switch the main machine power off to prevent accidental starting of the machine. Disconnect the air supply and dissipate any stored energy.

When threading, see the pictures below. Change the thread tension by nut ❶ according to the sewing conditions. To increase the thread draw off (for example sewing on the thin fabrics) there is an arm ❷ installed on the thread draw off lever.

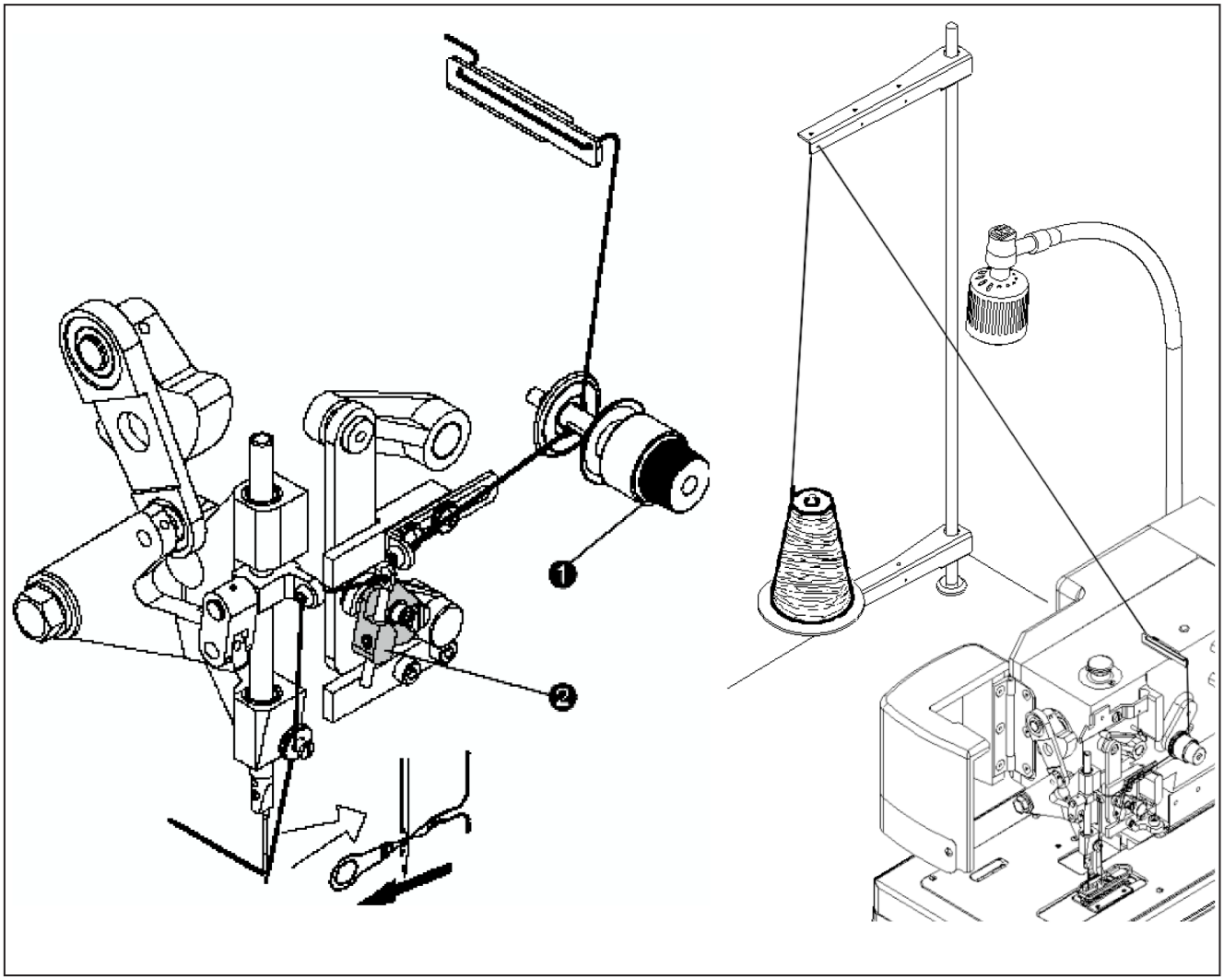

The appearance and quality of the sewing may be affected by one or more of the following:

- clamping of the material
- thread tension
- type of thread (size etc.)
- sewn material (thickness, density)

Released: 01/2021
E-mail: info@amfreece-cars.cz

D - MACHINE CONTROLS

1. PROGRESS OF SEWING

1. Bring the machine to the home position according to the section C1.

2. Be certain that the machine is threaded correctly according to the section C3 and insert the work under the clamp feet.

3. When the foot pedal ❶ is pressed to the first position, the work is clamped by the clamp feet.
(Releasing the foot pedal will rise the clamp feet).

Note: It is possible to set in the program the machine start on first pedal position.

4. When the foot pedal is pressed to its second position, the sewing is started. After finishing the sewing and trimming the thread, the machine returns to the home position and the clamp feet rise.

5. When the clamp feet are up, it is possible to move the sewn work for next sewing.

6. Machine can be stopped in any place of the cycle by pressing the Emergency Stop button ❷ which is placed on the machine head. After releasing the Emergency Stop button, pressing the button and pressing the foot pedal, the machine finishes the sewing.

7. If the foot pedal ❶ is pressed before finishing the sewing, the clamp feet will not rise and the machine will sew four cycles instead of two - this is possible to set in program.

8. When the work is done, switch the machine off by the ❸ button.

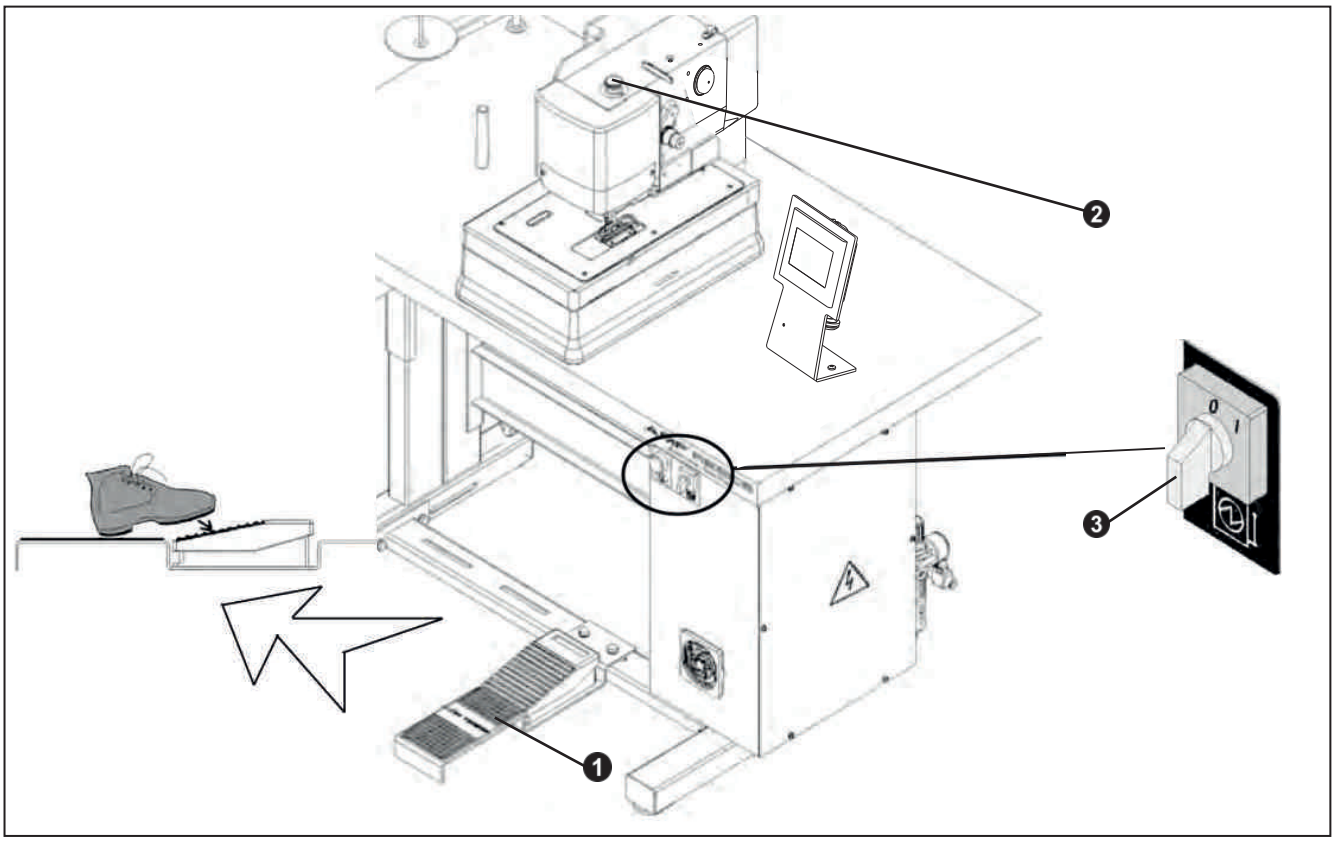

D - MACHINE CONTROLS

2. OPERATOR CONTROL PANEL PUSH BUTTONS AND SWITCHES

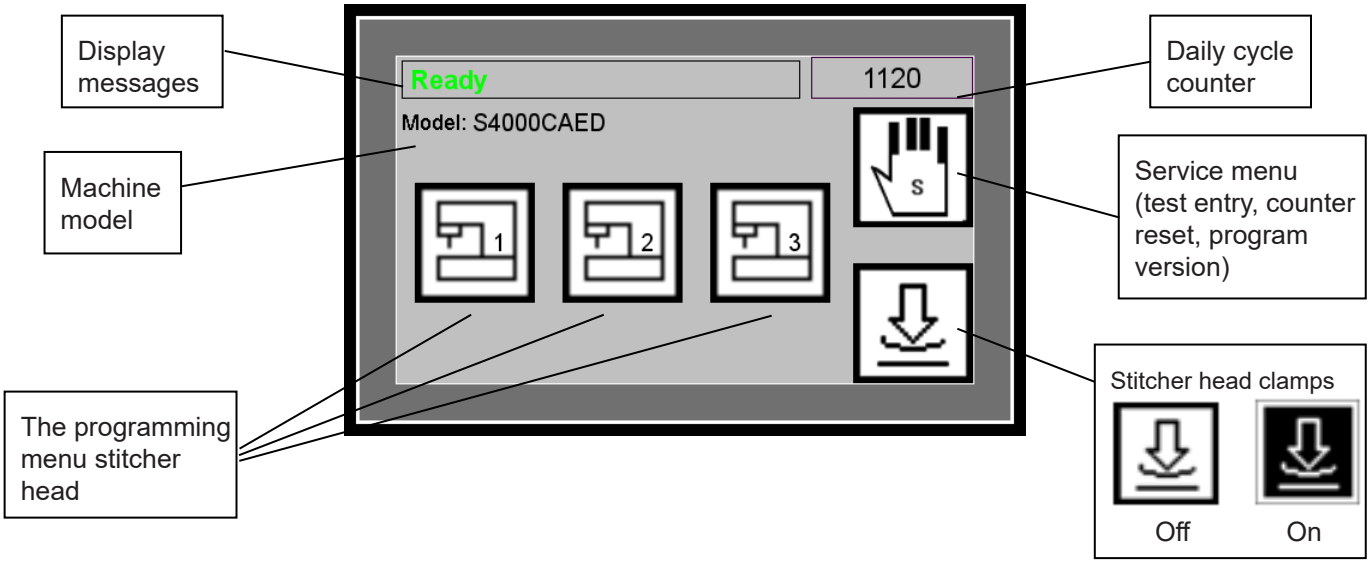

Display messages:

Standard messages:
- Ready
- Emergency stop
- Wait please
- Busy

Error messages:
- Motor not ready
- Low air pressure
- Low voltage

ATTENTION!
When doing any kind of adjustment, keep your hands off the needle area. The basic machine design is equipped with a pedal control; therefore never place your foot onto the foot pedal.

Error messages on the display are mentioned in *Troubleshooting* section.

Error setting

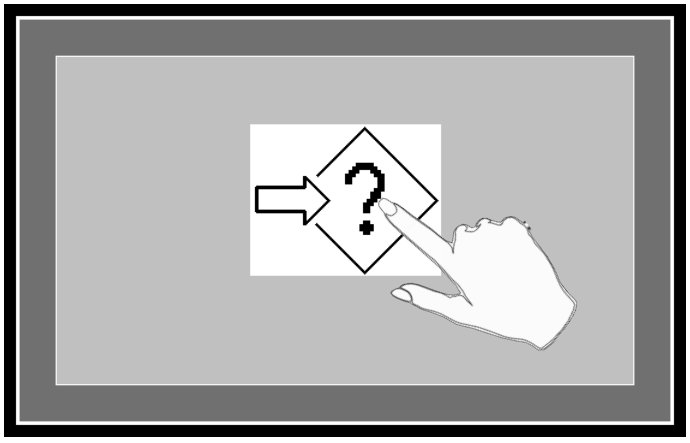

It will display if the value of the parameter is adjusted out of range.

Press the screen on the display, you will return on the main screen

Released: 01/2021
E-mail: info@amfreece-cars.cz

D - MACHINE CONTROLS

3. THE PROGRAMING MENU STITCHING HEAD

Enter the sewing head program menu by pressing button

Parameters set 1

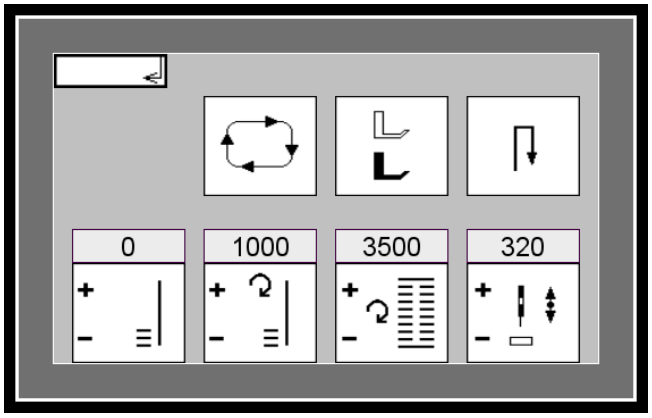

Parameters set 2

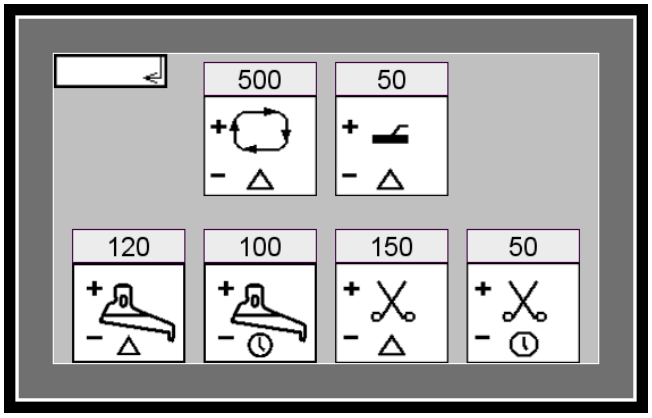

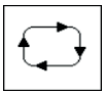	Setting the machine cycling. (On/Off). If the button is backlit, the function is active.
	Setting the foot pedal position. (Possible setting 1step/2steps). Adjustment for position 1 means, that the machine closes clamps and starts sewing in one moment.
	Adjustment for position 2 means, that the machine closes clamps on 1 position and on position 2 starts the sewing cycle.
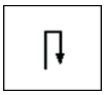	Setting the number of buttonhole sewing (It is possible to set 1 sewing/2 sewings/1 or 2 sewings) Setting 1 sewing
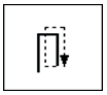	Setting 2 sewings
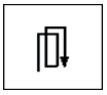	Setting 1 or 2 sewings. If you press the foot pedal and keep it pressed down after sewing 1 buttonhole, the buttonhole will be sewn again. If you press the foot pedal only at the start of sewing and release it, a buttonhole will be sewn by 1 sewing.
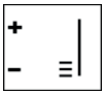	Setting the number of stitches in slow speed at the beginning. (it is possible to set 0 – 3 rpm)
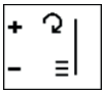	Setting the slow start speed at the start of sewing cycle. (Range 500 - 1000 rpm)

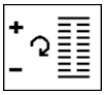	Setting the maximum sewing speed. (Range 1000 - 3840 ppm)
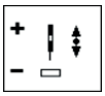	Setting correction of the needle bar upper position. (Range 0 - 600 imp)
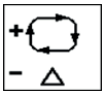	Setting the delay between the button hole sewing cycles. (Range 500 - 2500 ms)
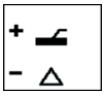	Clamp feet opening delay adjustment, at the end of cycle. (Range 0 - 100 ms)
	Setting delay of activation cutting and thread tension. (Range 60 – 135 ms)
	Setting the length of cutting activation and thread tension. (Range 30 – 200 ms)
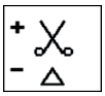	Setting the trim delay. (Range 0 - 200 ms)
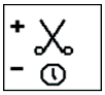	Setting the trim timing activation. (Range 30 - 60 ms)

To return to the main screen, press ⏎ key.

D - MACHINE CONTROLS

Parameters set 3

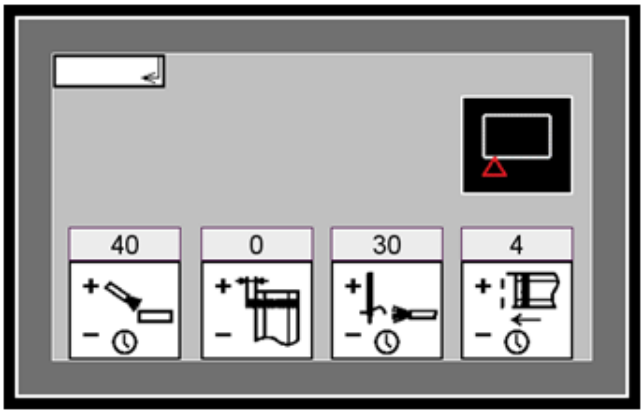

Setting the length of activation of the trimmed material blow out.
Range **10 – 1000 ms**.

Setting the number of stitches sewn over the fabric edge. Range **0 – 30 stitches**.
The value is to be set according to the set density of the sewing and electronically set sewing speed.

Setting the activation length of the thread blow out.
(if the supplement is installed on the machine)
Range **10 – 1000 ms**.

Setting the time of the clamping plate movement.
Range **300 – 900 ms**.

Activation of the optical sensor function (black – switched on).

Released: 01/2021
E-mail: info@amfreece-cars.cz

D - MACHINE CONTROLS

4. TESTS

W a r n i n g !!! The tests can be carried out by qualified service men only.

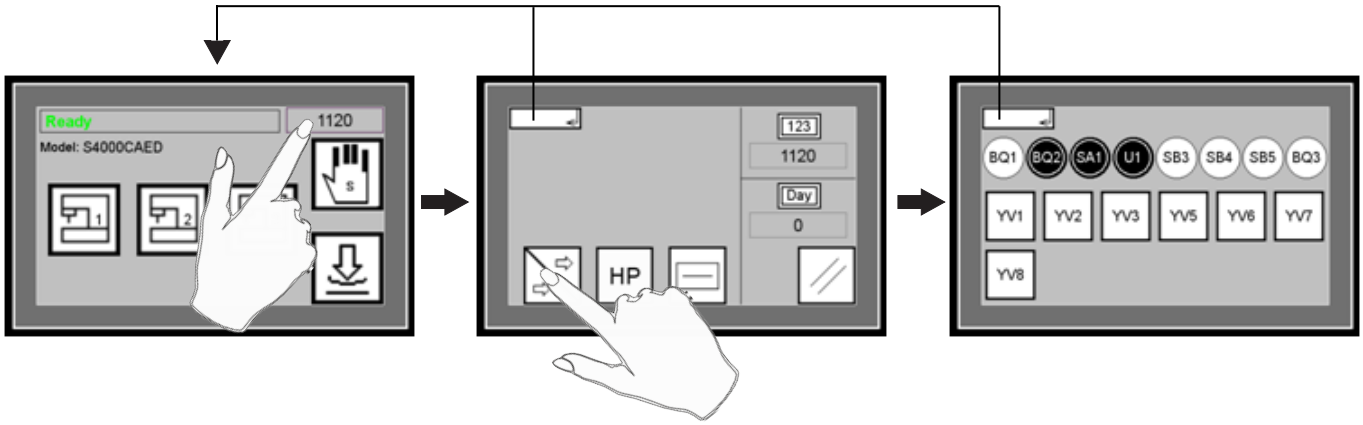

Inputs

BQ1 – The end position sensor BQ1. The symbol signalizes correct function of the sensor of the end position of the cam (HOME) BQ1.
Activate the sensor using a metal tool and the button turns black.

BQ2 – The symbol signalizes the correct function of the air pressure button BQ2.
If the air pressure is less than 0,5 MPa the button is under lighted.

SA1 – The symbol signalizes the correct function of the emergency button SA1.
After pressing button key EMERGENCY STOP the button is under lighted.

U1 – The symbol signalize the correct function of the servodriver.
If the servodriver is in operation, the button is underlighted.

SB3 – The sewing head clamps button.
When pressing the clamps button on the machine or in the main menu, the symbol turns black.

SB4 – The symbol signalizes the correct function of the first position button of the pedal SB4.
When the foot pedal is pressed to its first position the button SB4 is underlighted.

SB5 – The symbol signalizes the correct function of the second position button of the pedal.
When the foot pedal is pressed to its second position the button SB5 turns black.

BQ3 – The optical sensor of the fabric laying.
When the fabric is layed, the symbol turns black.

Outputs

YV1 – The button is used to activate the YV vent of the cutting lever. The cutting lever goes down.

YV2 – This button is used to activate YV2 vent of the clamping. The clamps are pressed onto the fabric.

YV3 – The button is used to activate the YV3 vent of the thread trimming.

YV5 – This button is used to activate the YV5 vent of the clamping plate.

YV6 – This button is used to activate YV6 vent of the cylinder interrupter movement.

YV7 – This button is used to activate YV7 vent of the blow of the trimmed fabric.
Air starts blowing out of the clamping.

YV8 – This button is used to activate YV8 vent of the thread blow out.
Air starts blowing towards the needle.

D - MACHINE CONTROLS

5. PROGRAM VERSION

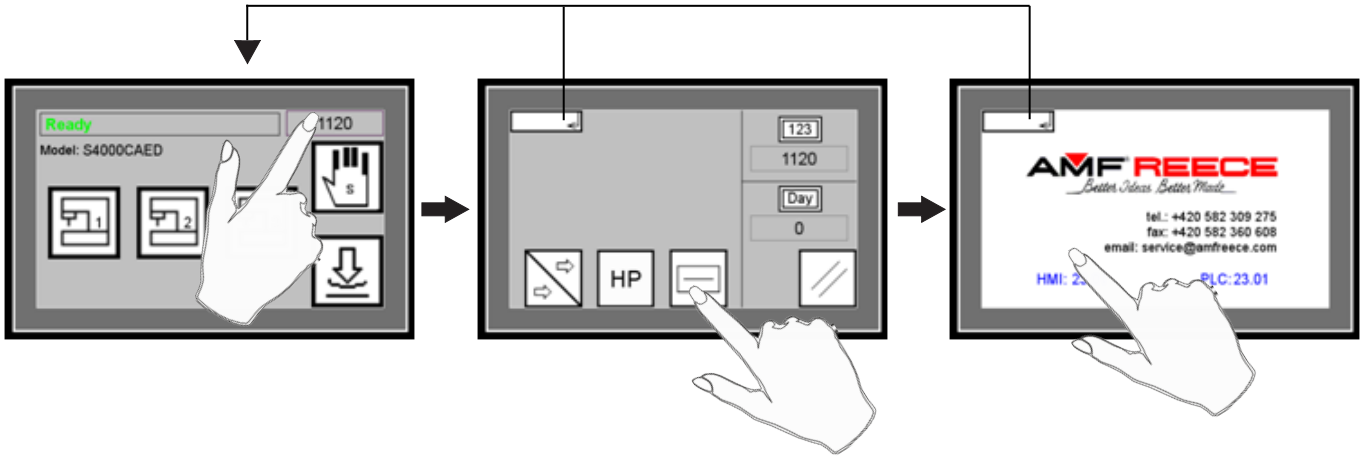

6. COUNTER RESET

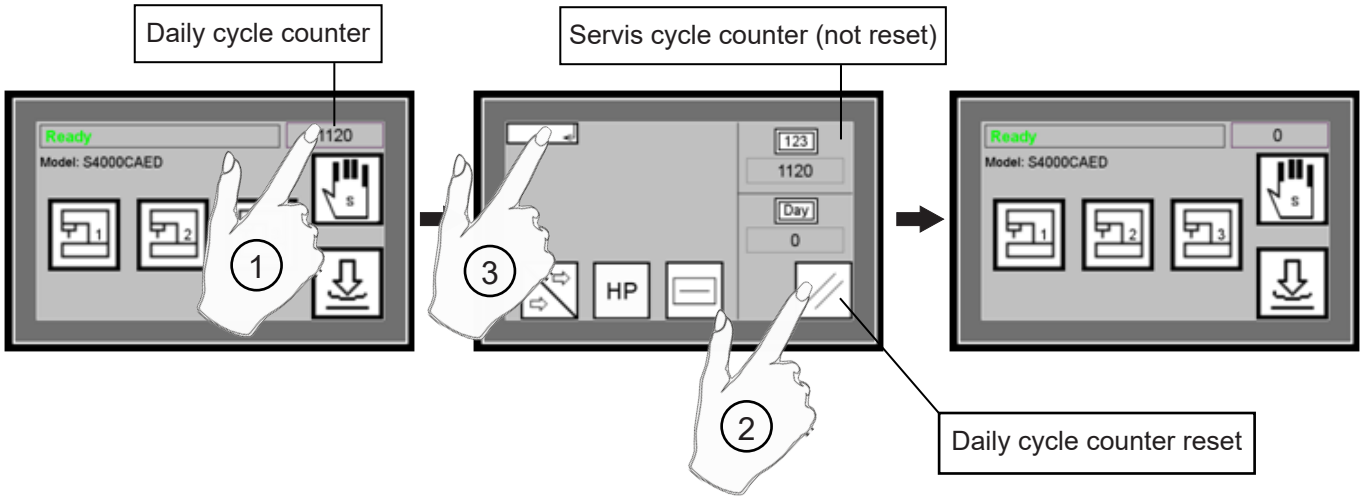

Released: 01/2021
E-mail: info@amfreece-cars.cz

D - MACHINE CONTROLS

7. PARAMETER CHECKLIST

PARAMETER	RANGE	SETTING
	Off / On	Off
	1 step / 2 steps	2 steps
	1 repeat / ½ repeat / 2 repeat	1 repeat
	0 - 3	0
	500 - 1000 rpm	1000
	1000 - 3840 rpm	3500
	0 - 600 ipm	320
	500 - 2500 ms	500
	0 - 100 ms	50
	30 - 200 ms	
	60 - 135 ms	
	145 - 200 ms	
	30 - 60 ms	
	10 - 1000 ms	
	0 - 30 stitches	
	10 - 1000 ms	
	3000 - 900 ms	
	black on	

E - STANDARD MACHINE ADJUSTMENT

1. MACHINE HOME POSITION

1. Needle bar is i n the upper position. When making the first stitch, the needle ❶ must go into the right side throatplate groove ❷. Mark ❽ on the hand wheel must meet mark ❽ on the pulley cover.

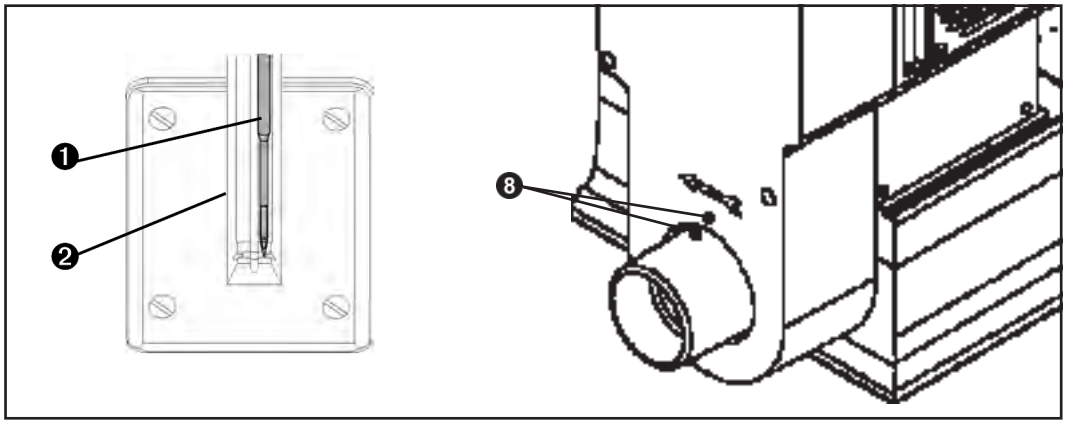

2. ADJUSTMENT OF THE SHIFTER

1. Machine must be in the home position.
2. Tilt the machine, lean it onto the support pi n and look at the assembly of the main cam. There must be a minimal play x between the main cam shifting mechanism. If you see the mechanisms clash into each other, lose screws ❻and take out the spring ❼. Loose screws ❽ and move arms ❾ ❿ from the main cam as much as possible. Check the minimal play *x* after the adjustment.

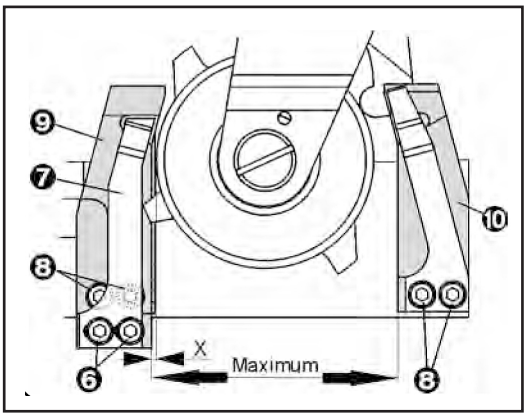

3. PRINCIPLES FOR MA CHINE ADJUSTMENT

Before starting doing adjustments switch the machine into the service mode by pressing the emergency stop button ❶ on the machine head and releasing it again. To return to the main screen, press button ❷.

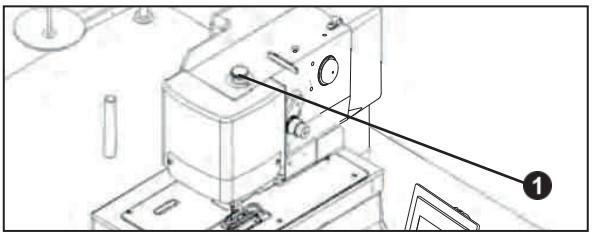

Service mode screen

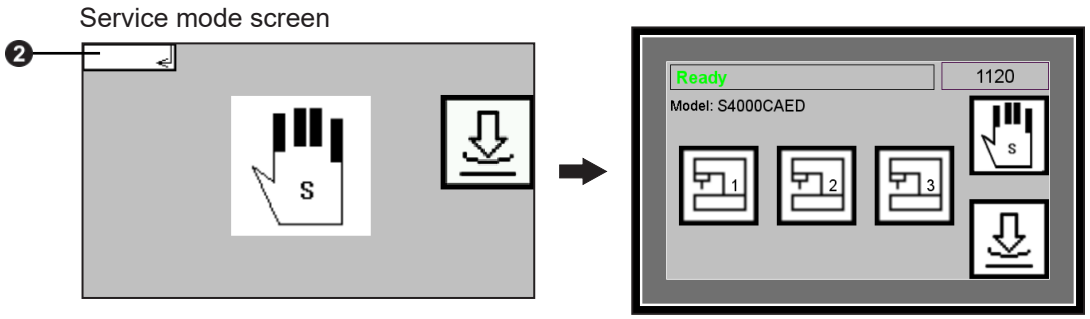

Released: 01/2021
E-mail: info@amfreece-cars.cz

E - STANDARD MACHINE ADJUSTMENT

4. NEEDLE BAR

1. ***Position of the bell-shaped eccentric***
   Turn the hand wheel ❺ and loose the fastening screw ❶ in the bell-shaped eccentric ❷. Keep turning the hand wheel until the needle bar reaches upper position.
   Pulley screw ❸ on the main shaft is on the same level with the bearing cage screws ❹. Tighten the fasting screw ❶.

NOTE: In order to check this device (home position), turn the hand wheel forward and backward. The needle bar must go down, not up. The needle ❿ must start sewing in the direction of the arrow – see the picture.
After the adjustment of the eccentric, check the position of loopers and main shaft with the upper shaft. (See loopers adjustment).

2. ***Setting up the height of the needle bar***
   With the machine in home position, set up the needle bar ❾ with the gauge ❻ to the height of 16 mm (5/8“) from the top of the throatplate ❼ to the low edge of the needle eye.
   Loosen the setscrew ❽ and move the needle bar up or down as necessary.

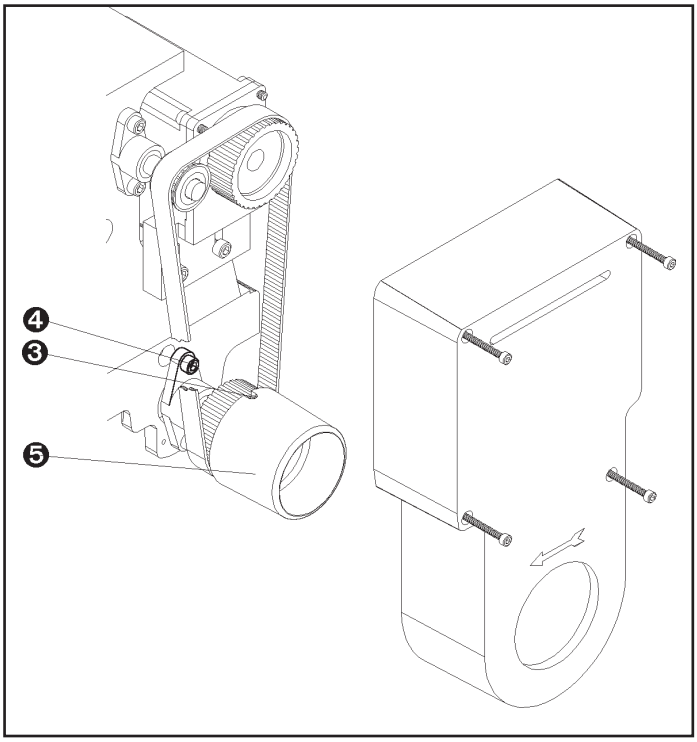

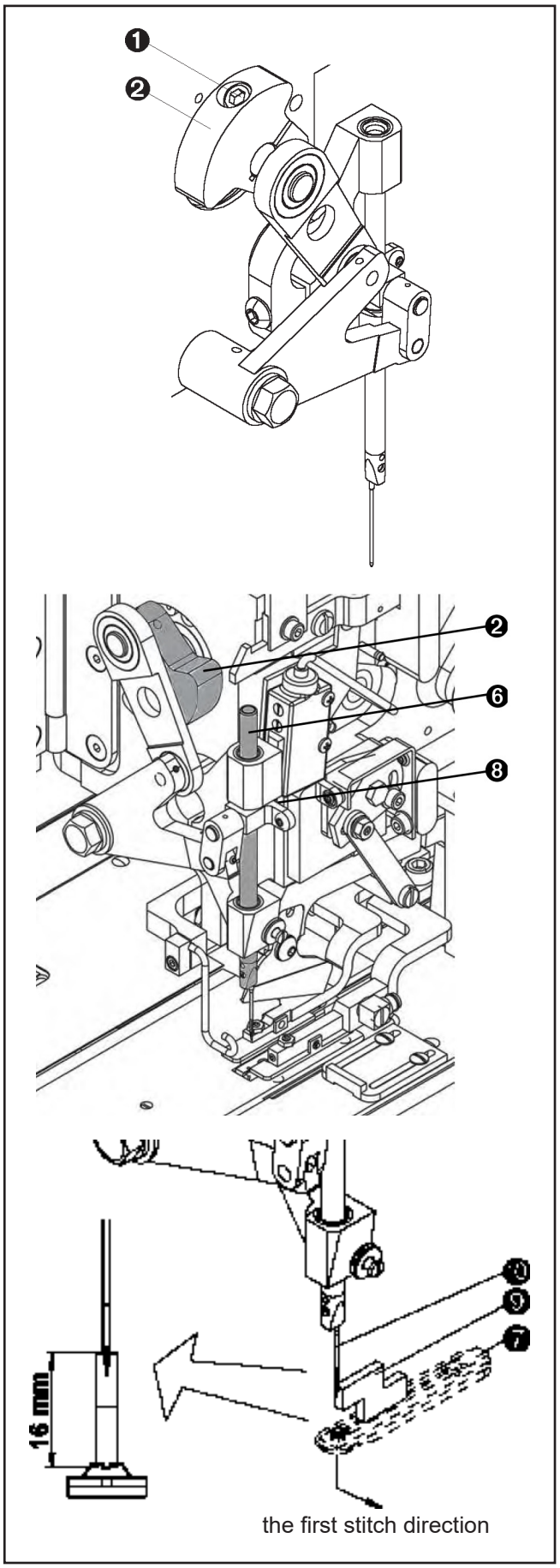

E - STANDARD MACHINE ADJUSTMENT

5. BITE

Before setting up the bite, dismantle pulley cover ❷ and head cover ❶.

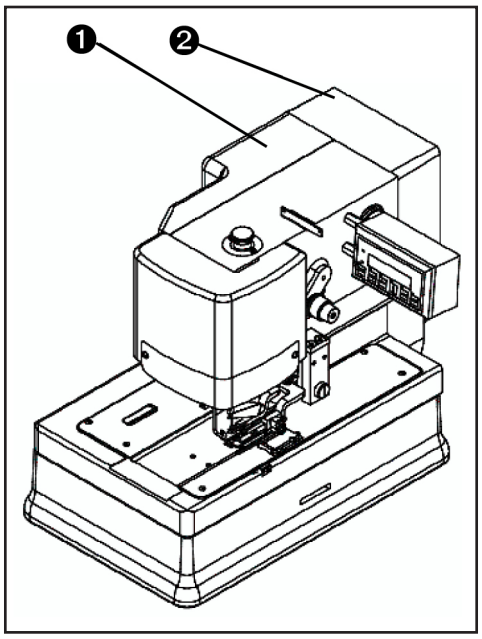

1. Bite cam

a. Check that the machine is in home position.
b. Tilt the machine head onto the support pin ❼.
If the adjustment i s correct, the second setscrew ❽ of the cam ❾ (counter-clockwise) must fit vertically onto the bedplate casting.
c. Preparatory adjustment of the bite i s done by tightening the setscrew ❽ of the cam ❾ on the shaft.
The needle ❿ must travel even distance when moving up and down from the up dead centre.

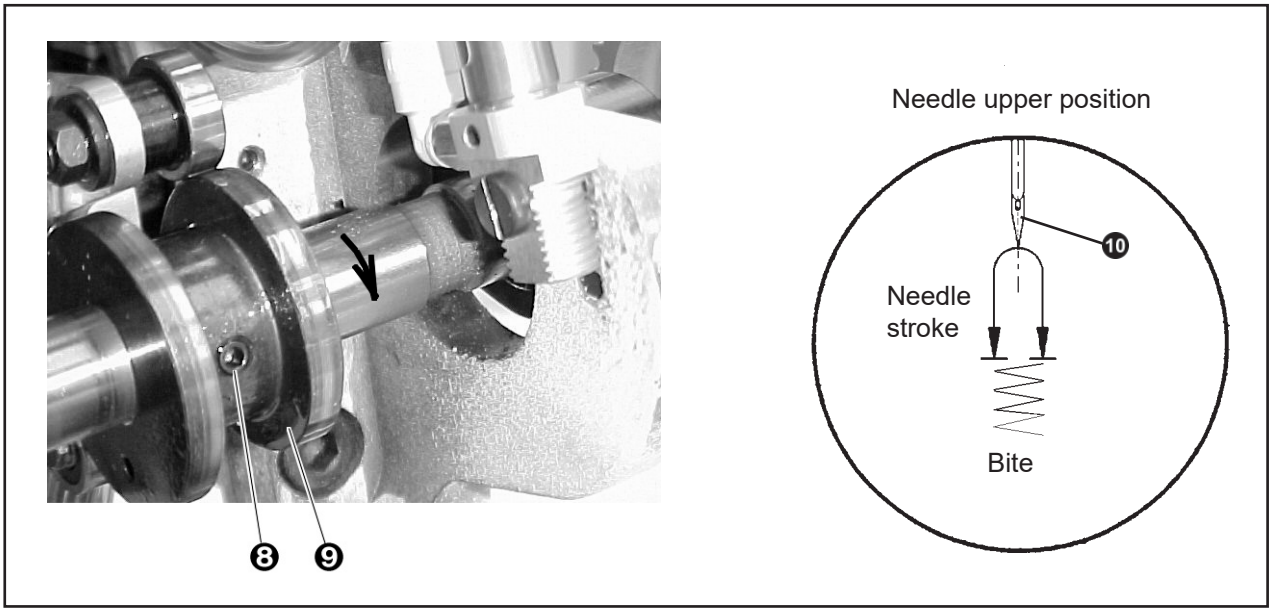

Released: 01/2021
E-mail: info@amfreece-cars.cz

E - STANDARD MACHINE ADJUSTMENT

2. *Setting up the width of the bite*

Tilt the machine head from the support pin back into the sewing position. The width of the bite i s set up from the rear side of the machine head from the space below the motor. Hence the head cover needs to be dismantled.

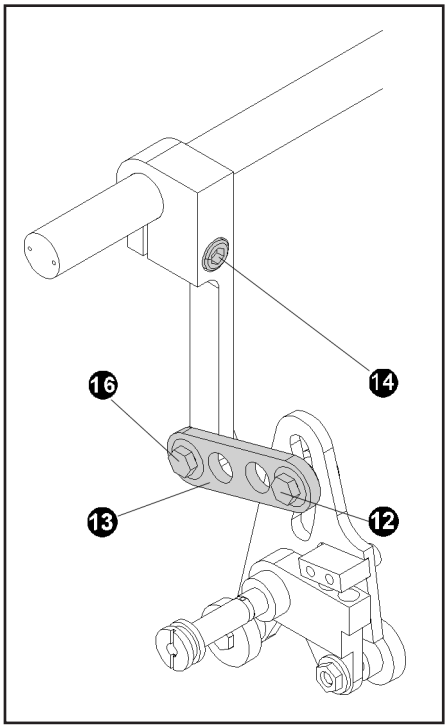

The machine S-4000 is assembled with the throatplate ⓫, having the bite range from 1.5 mm (1/16“) to 2.3 mm (3/31“). The width of the bite is adjusted as follows:

a. loosen the adjusting screw ⓬
b. lift up the drawbar ⓭ to get a wider bite
c. bring the drawbar ⓭ to get a narrower bite
d. tighten the adjusting screw ⓬

3. *Setting up the bite in the throatplate*

a. the machine must be in the home position – loosen the tightening screw ⓮ on the bite lever ⓯
b. turn the hand wheel to lower the needle bar into the bottom dead centre and move it towards the right side throatplate groove ⓫
c. tighten the tightening screw ⓮
d. turn the hand wheel to check that the needle ❿ has same play on both sides of the throatplate groove.

NOTE: This i s just a reference adjustment.
For final adjustment loosen the eccentric screw ⓰ and turn slowly the eccentric screw ⓱. Position the needle in such way that the play is same on both sides of the throatpalte groove.
Tighten the eccentric screw ⓰.

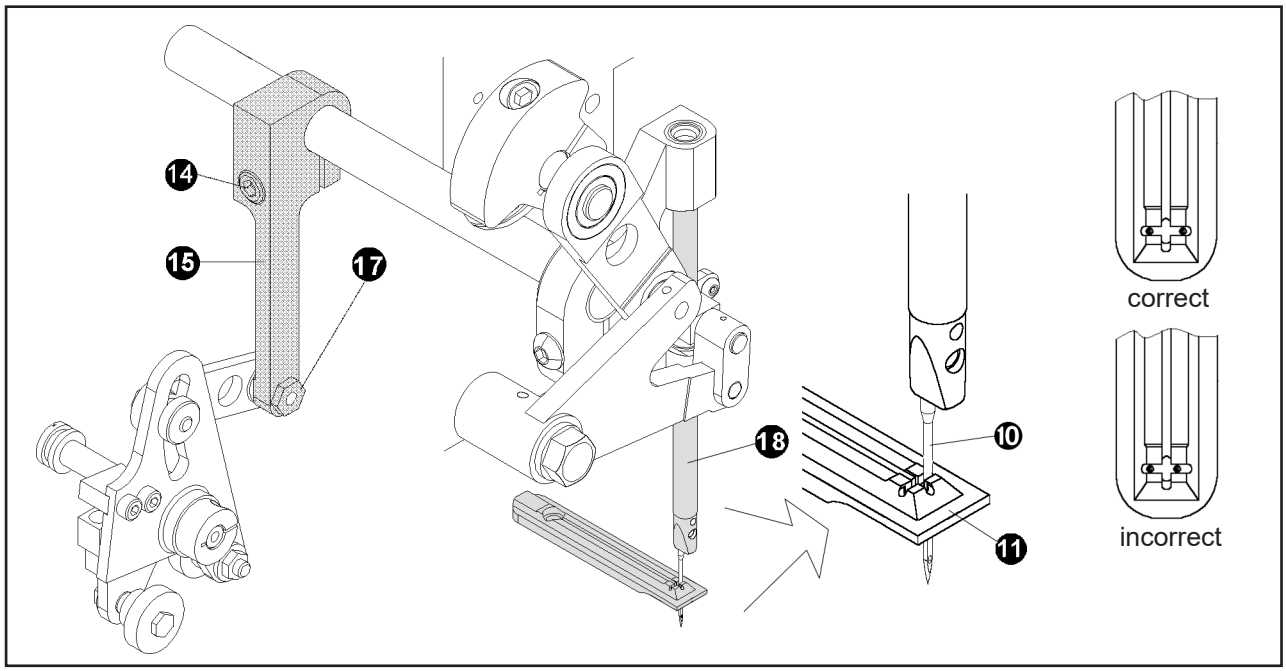

E - STANDARD MACHINE ADJUSTMENT

6. FEEDING

1. Tilt the machine head onto the support pin.
2. Adjustment of feeding wheels.

   Turn the hand wheel counter-clockwise until the guiding spring snaps into the shifter left arm notch. The feeding lever is on the very top point of the feeding cam. Dismantle the gearwheel safety cover and loosen the screws ❶, ❷ on the horizontal gearwheels and the crank drive screw ❸.
3. Loosen two adjusting screws ❹ in the right ring ❺.

   Pressing the end of the feeding shaft ❻ against the right ring ❺ you adjust the distance between the left ring ❼ and the end of the feeding shaft ❻ to 11 mm. Tighten the adjusting screws ❹ on the right ring ❺. This i s the right tension adjustment of the left ring on the shaft.
4. Place the right gearwheel ❽ into the gearing with the vertical wheel ❾ secure its position with setscrews ❶.
5. Turn the hand wheel counter clockwise until the guiding spring snaps into the shifter right arm notch. The feeding lever is on the very bottom point of the feeding cam. Place the left gearwheel ❿ into the gearing with the vertical wheel ❾ secure its position with setscrews ❷. Push the crank drive towards the left gearwheel ❿ and secure it with the screw ❸.

You have set up the position of the feeding wheels. Turn the hand wheel to finish the sewing cycle and bring the machine into the home position. Mount the wheel safety cover on.

6. The feeding always starts, in other words the clamp plate moves, when the needle is out of the fabri c, and it i s i n the position when the needle tip is right above the fabric.
7. Use a sheet of paper to do the adjustment. You will clearly see needle punctures.

   If the adjustment is incorrect, set the machine into such a sewing position so that the guiding spring snaps into a shifter arm notch.

   Loosen the screws on the feeding cam ⓫ and adjust its position so that the clamp plate moves in the moment of the needle being out of the fabric (above the paper). Tighten the setscrews.

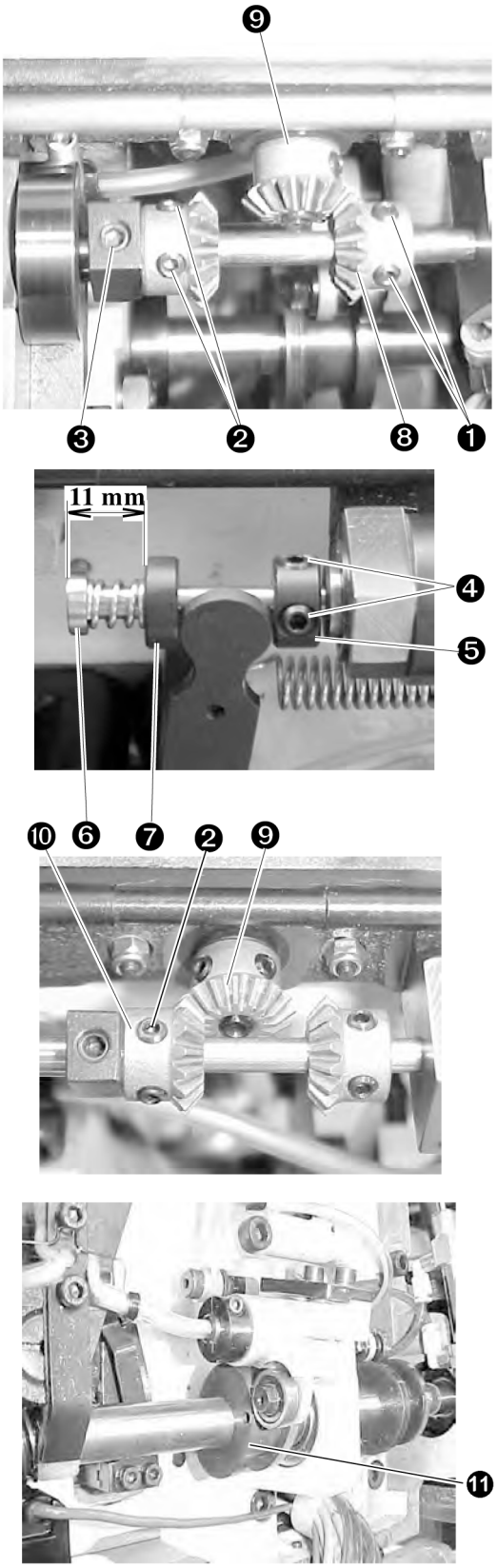

Released: 01/2021
E-mail: info@amfreece-cars.cz

E - STANDARD MACHINE ADJUSTMENT

7. CLUTCH

Clutch pressure is set up by the manufacturer. Under normal circumstances, it is not necessary to adjust it.
The correct torque is 0,42 Nm.

Hold the nut ❶ and tighten the adjusting screw ❷ with a torque wrench. Adjust the torque so that is even on both sides of the clutch.

NOTE: If you do not have a torque wrench available, set ends of both screws so that screw-threads overlap nuts edges of 1,5 mm.

CAUTION: If the torque is too small, fabric will not be fed in correctly.
If the torque is too big, it can damage some parts (gearwheels).

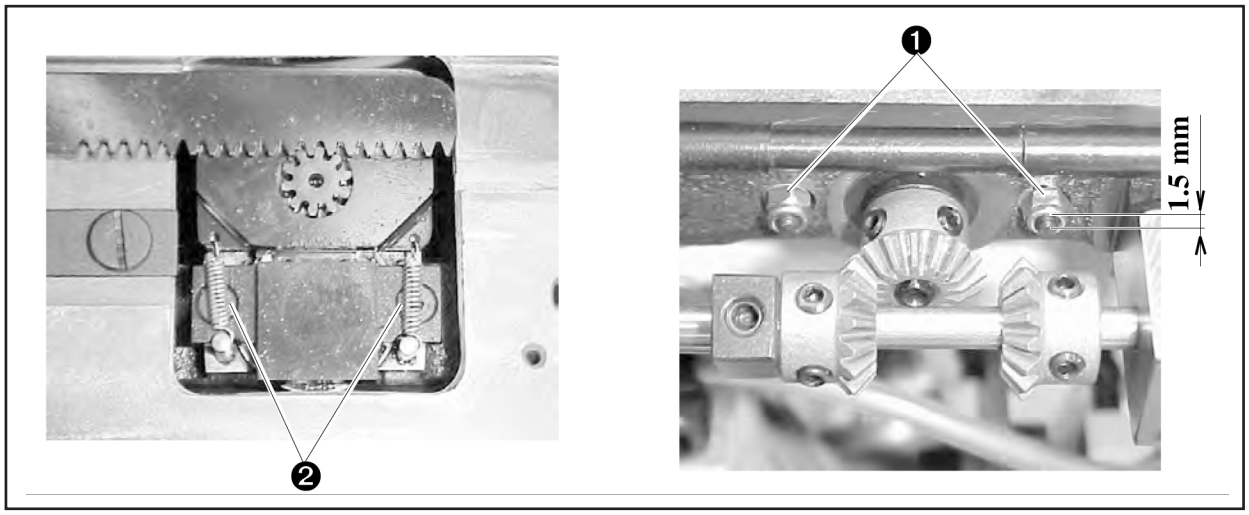

8. STITCH DENSITY

Adjust position of the feeding rod ❸ in the density lever groove ❹ in order to achieve right stitch density .

Increasing stitch density 1:

a. Loosen the hexagonal screw ❺ and move the rod ❸ from the bedplate. That will increase the stitch density.
b. Tighten the hexagonal screw ❺.
Maximal stitch density is 14 stitches per 10 mm.

Reducing stitch density 2:

a. Loosen the hexagonal screw ❺ and move the rod ❸ towards the bedplate. That will reduce the stitch density.
b. Tighten the hexagonal screw ❺.
Minimal stitch density is 3 stitches per 10 mm.

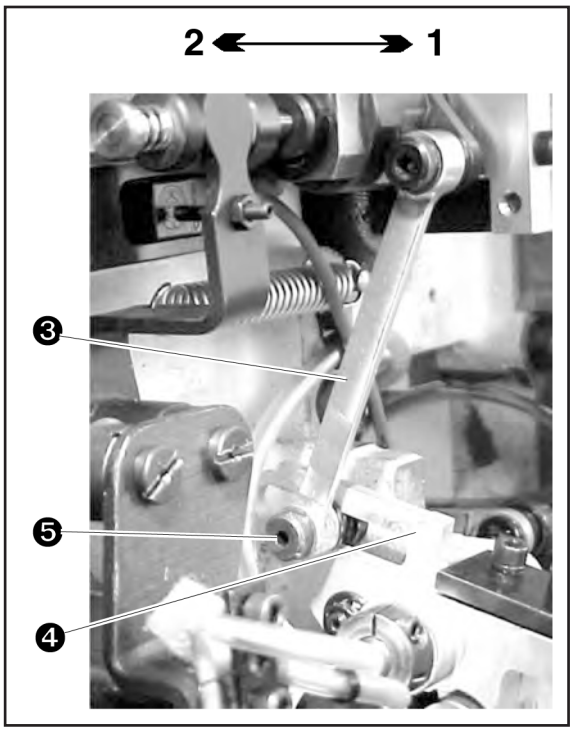

E - STANDARD MACHINE ADJUSTMENT

9. LOOPERS ADJUSTMENT

Before the adjustment, follow the instructions below:

- Turn the hand wheel and see carefully the position of the connecting rod ❶ on both extreme positions of the looper movable arm ❷. Angle A ❸ and angle B ❹ should be even.
- If the angles are not even – loosen the hexagonal bolt ❺ and turn the eccentric nut ❻ as necessary. Tighten the hexagonal bolt ❺.
- Turn the hand wheel to set the needle bar to the upper dead centre.
- Check that the needle is straight.
- Tilt the head onto the support pin and check that the mark ❼ on the looper cam ❽ is on the left side. If it is on the right side, take the cam out and turn. Place the machine head back to the operation position.
- Remove the cover ❾, disconnect pneumatic pipes from the clamping cylinder and take the clamping assembly ❿ out. Remove the throatplate ⓫, trimming hook cover ⓬ and trimming hook. Dismantle the holders with loopers.

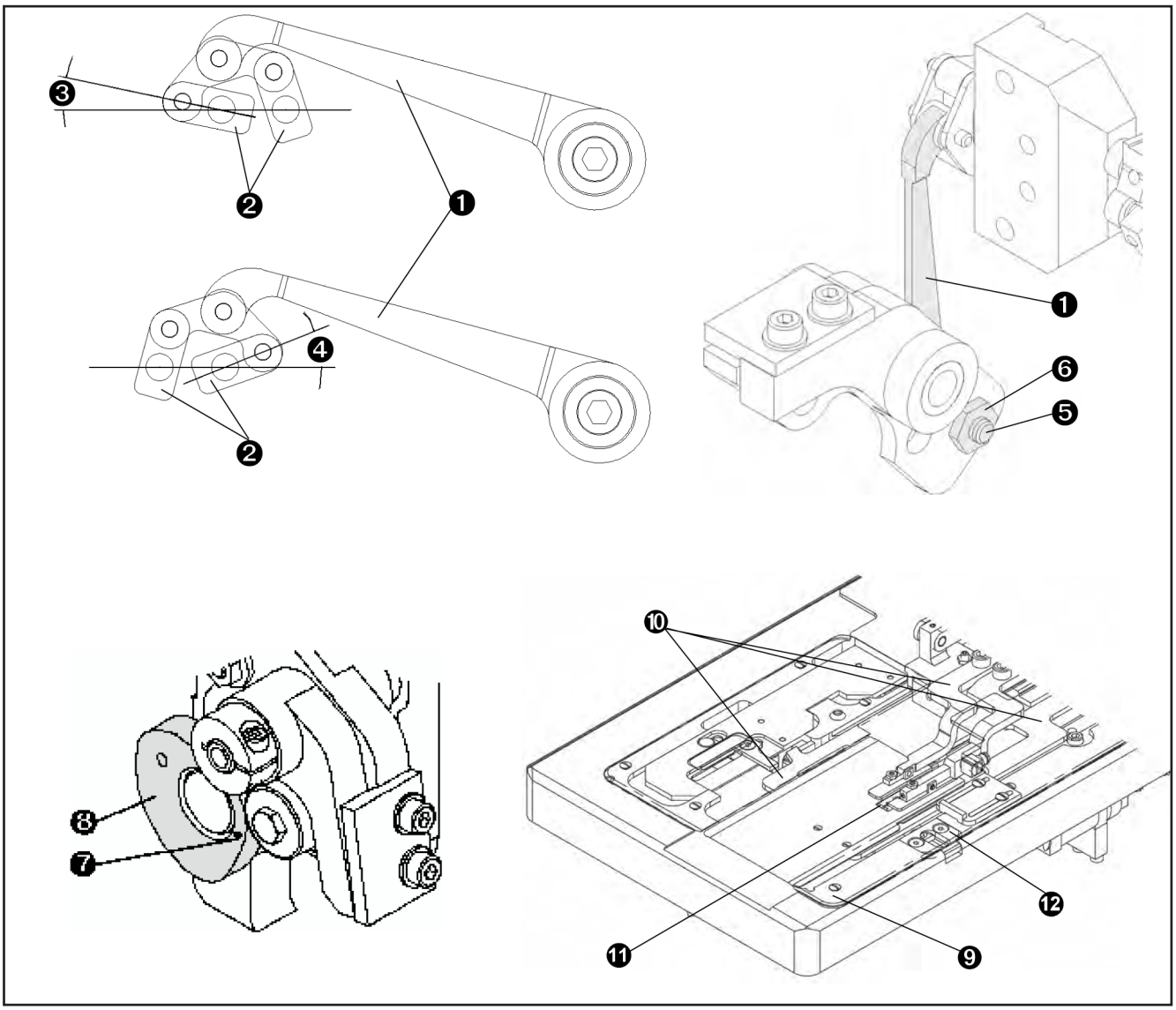

Released: 01/2021
E-mail: info@amfreece-cars.cz

E - STANDARD MACHINE ADJUSTMENT

Adjustment of the first looper

1. With the machine being in the home position, loosen the looper cam ❽ screws ⓭ and set it to the lowest position.
2. Loosen the adjusting screw ⓯ and turn the looper so that it is vertically towards the opening in the holder.
3. Install the holder with the first looper ⓮ onto the shaft.
4. Loosen the looper holder screw ⓰ and move the holder so that the needle goes through the centre of looper opening. There must be 0,4 mm play between the needle and the looper opening. Tighten the looper holder screw ⓰.
5. Loosen the looper screw ⓯ and turn the looper ⓮ towards the needle so that there is 0,1 mm play between the needle and the looper tip.
6. Turn the hand wheel counter clockwise. Once the needle comes back to the home position from the bottom dead centre, insert the gauge ⓱ market **1** (wider side of the gauge) between the needle bar holder and the needle bar clamp.
7. Check that the looper tip is centered on the needle and that it is 1 mm above the needle eye.
8. If it is not centered – loosen the looper cam screw ⓭ and hold it Turn the hand wheel slightly counter clockwise if the distance between the looper tip and the needle eye is larger that 1 mm; clockwise if the distance is smaller than 1 mm. Tighten the looper cam screw ⓭.
9. If the looper cam has been re-adjusted, it is necessary to check the play 0,4 mm between the needle and the looper opening.

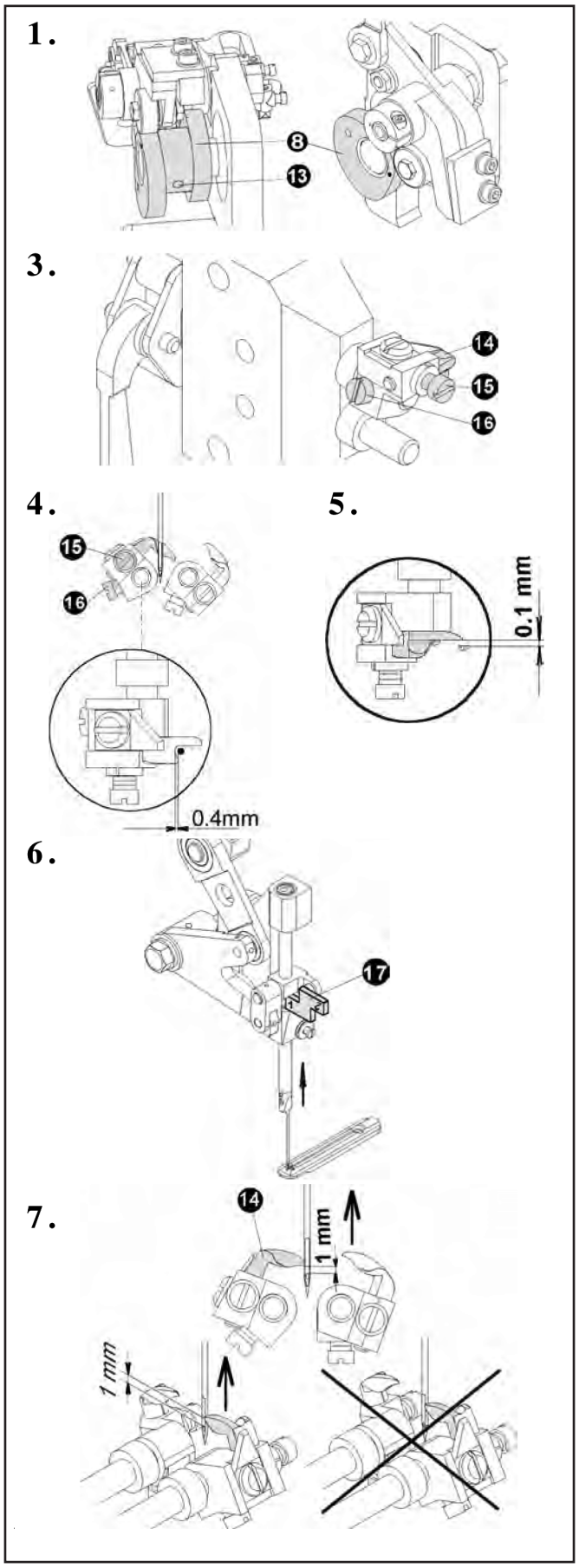

E - STANDARD MACHINE ADJUSTMENT

Adjustment of the second looper

10. Insert the second looper ⓲ onto the looper shaft.
11. Loosen the looper holder screw ⓳ and move the holder so that the needle goes through the centre of looper opening. There must be 0,4 mm play between the needle and the looper opening. Tighten the looper holder screw.
12. Loosen the looper screw ⓴ and turn the looper ⓲ towards the needle so that there is 0,1 mm play between the needle and the looper tip.
13. Turn the hand wheel counter clockwise. Once the needle comes back to the home position from the bottom dead centre, insert the gauge ⓱ market **2** (narrower side of the gauge) between the needle bar holder and the needle bar clamp.
14. Check that the looper tip is centered on the needle and that it is 1 mm above the needle eye.
15. When adjusting the looper cam, it is necessary to check the set up of the first looper again.

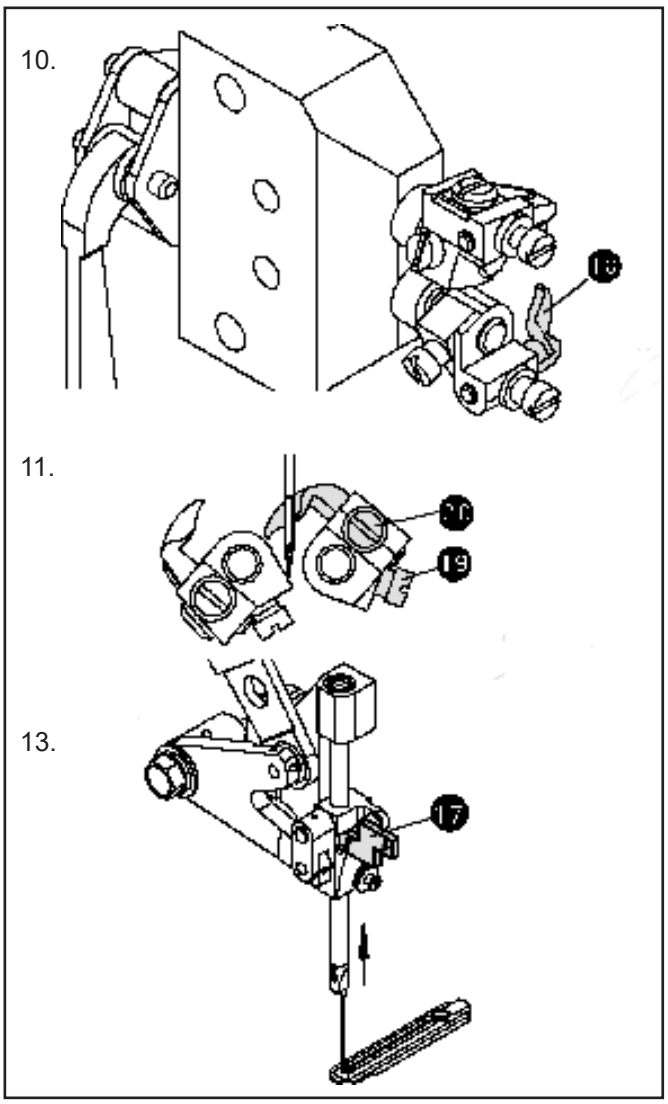

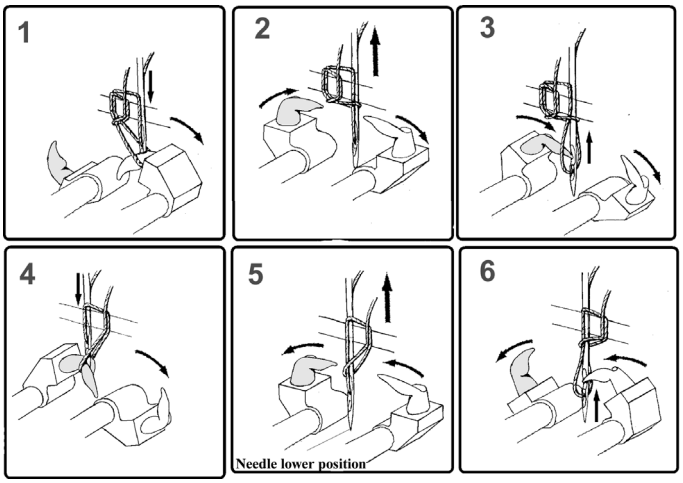

Released: 01/2021
E-mail: info@amfreece-cars.cz

E - STANDARD MACHINE ADJUSTMENT

10. HOME POSITION OF THE CLAMP PLATE

1. Home position of the clamp plate before sewing:
   a. conical gear wheels ❶ on the feeding shaft are disjointed by the vertical conical gear wheel.
   b. clamp plate is placed on the right side (to the head casting)

2. If the feeding wheels are not disjointed, proceed as follows:
   a. loose the worm gear wheel screws ❷ of the main shaft, hold the worm gear and turn the hand wheel counter clockwise or clock wise as necessary . Tighten the screws.

   Note: If the adjustment i s correct, the conical wheels must be disjoined in the home position and the first needle puncture/stitch must go into the right throatplate groove.

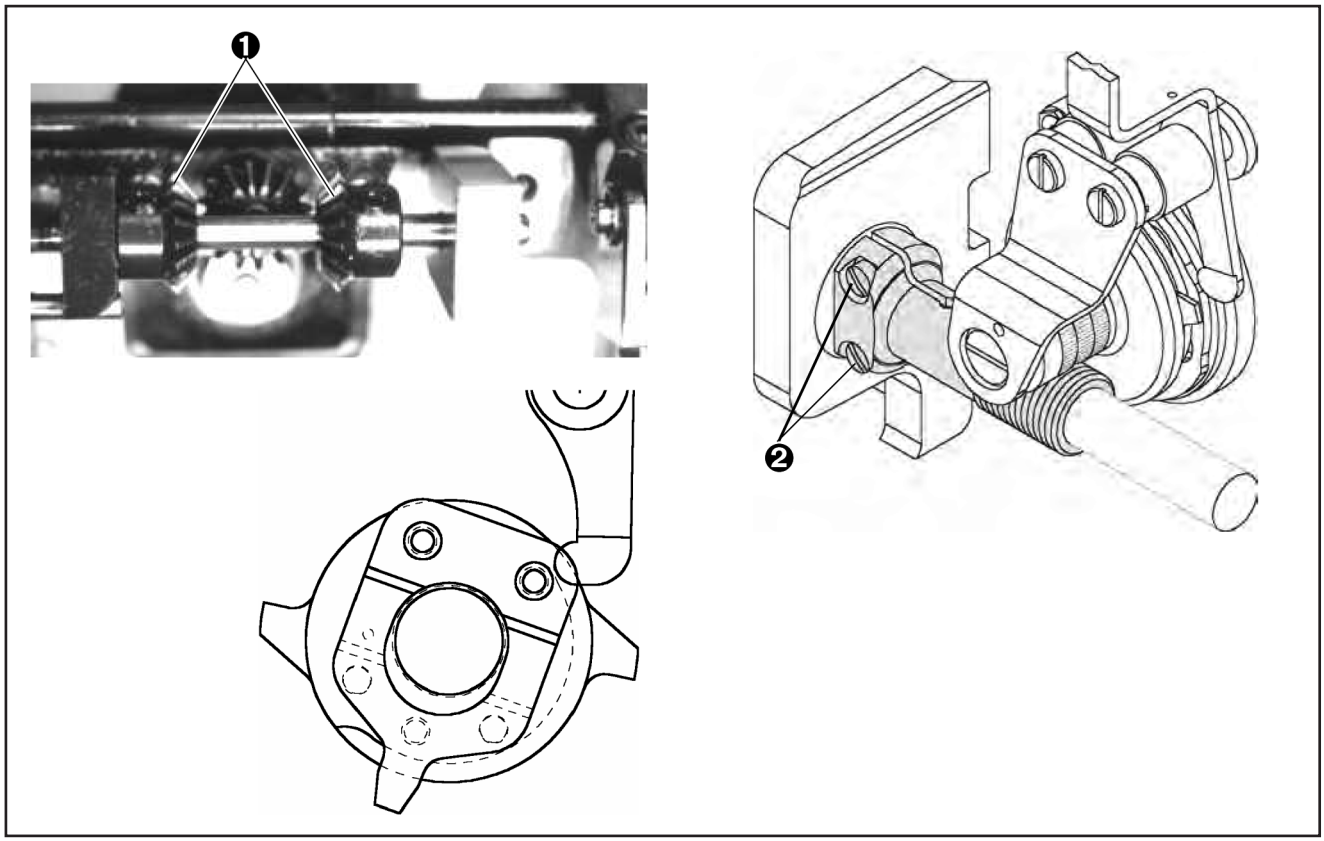

E - STANDARD MACHINE ADJUSTMENT

11. CLAMP PLATE ADJUSTMENT

1. If the distance between the clamp plate cover ❶ and the throatplate edge ❷ is too large, proceed as instructed in items 2 and 3. Recommended distance – 0,2 mm.
2. Loosen the nut ❸ in the lever groove ❹.
3. Insert the gap gauge 0,2 mm into the gap between the clamp plate cover ❶ and the throatplate edge ❷ . Move the clamp plate ❺ onto the gauge and secure the position by tightening the nut ❸.

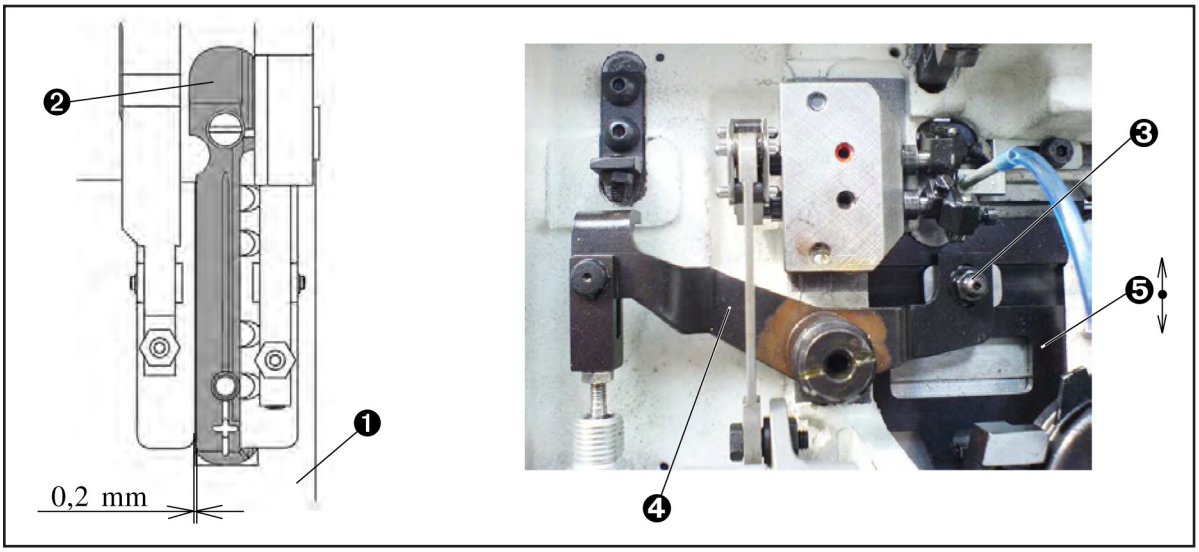

12. TRIMMING MECHANISM ADJUSTMENT

If the mechanism does not trim properly, do the following:

* Disconnect the air supply , close the clamp feet and move the clamp plate to the left from the shear edge.

1. Check the shear knife ❶ and throatplate edges ❷. If they are damaged, they can be sharpened or replaced with new parts.
2. Puss the trimming mechanism from the top by your hand ❸ and check whether the shears slightly overlap along the shear edge. If they do not overlap, loosen the screw ❹ M4 and turn the studs ❺. Secure the position by tightening the screws M4.

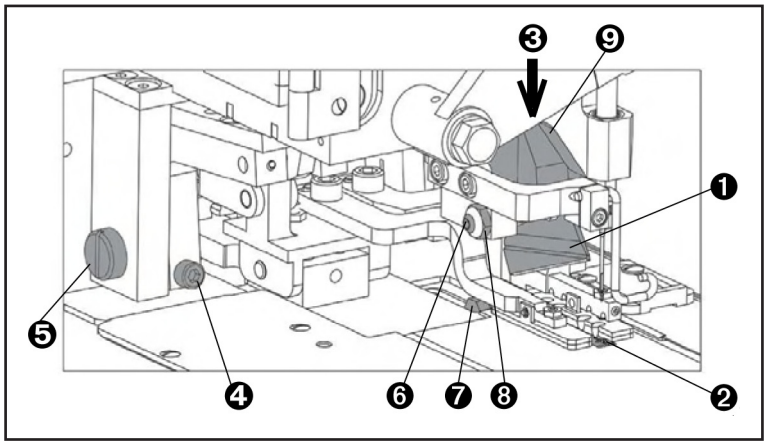

Released: 01/2021
E-mail: info@amfreece-cars.cz

E - STANDARD MACHINE ADJUSTMENT

3. Secure the correct position of the mechanism with the stopper ❻ in the upper dead centre and the stopper ❼ in the plate in the bottom dead centre.
4. Correct adjustment of the stop screw ❻:
   - loosen the nut ❽
   - turn the stop screw ❻ until it touches the cutting lever ❾
   - move the mechanism ❸ by your hand to check whether the motion has not been embarrassed
   - secure the correct position by tightening the nut ❽
5. Correct adjustment of the stopper ❼ i n the bottom dead centre:
   - tilt the machine head
   - loosen the screws ❿
   - with your hand push the trimming mechanism into the bottom dead centre
   - push the stopper ❼ onto the knife ❶ and secure its position by tightening the screws ❿.
   - check again, whether the motion has not been embarrassed
6. Take a blank sheet of paper and insert it into the trimming mechanism. Push the trimming mechanism with your hand. The cut must be neat. If it is not, proceed as per the instructions 1 – 6.

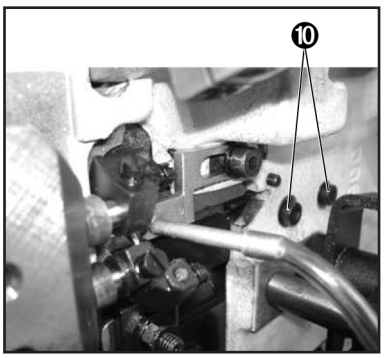

13. ADJUSTMENT OF THE CLAMP PLATE CHANGE-OVER

Standard set up of the device is 2 mm. It i s the minimal value for the knife to go through firmly. With such set up following results can be achieved:

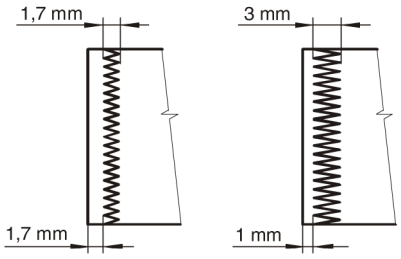

If you wish to shorten the distance between stitches and cut fabric, you can adjust the value with the nut ❶ and the screw ❷; to 3 mm at the most. Otherwise the knife may cut stitches.

NOTE: The set value must never be smaller than 2 mm, because of the knife, which can get damaged in such case!

Adjustment instructions:
- tilt the machine head
- loosen the nut ❶
- turn the screw ❷ and set up the required distance
- secure the position with the nut ❶

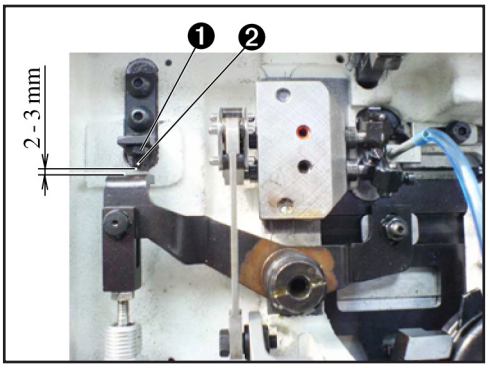

E - STANDARD MACHINE ADJUSTMENT

14. ADJUSTMENT OF MACHINE HEAD CLAMPING FOOT

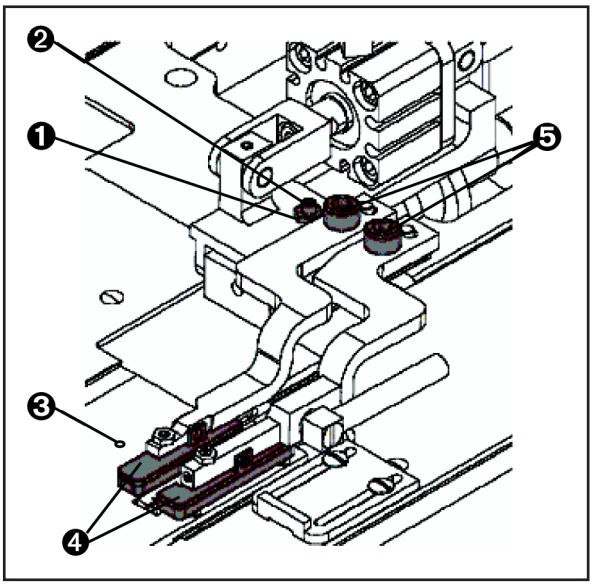

1. ***Adjustment of the uplift***
   Adjustment must be done with air switched on. Make sure the foot is open. If it is not, press the feet button to activate it.
   a. loosen the nut ❶
   b. turning the screw ❷ clockwise, the clamping foot mechanism ❹ moves away from the clamping mat ❸. Turning the screw counterclockwise, the mechanism comes forward.
   c. tighten the nut ❶

NOTE: once the foot uplift is adjusted and the machine is in its home position, the clamping foot should not be higher than the needle tip.

2. ***Adjustment of the clamping foot directing at the centre of the needle***
   Check that the foot is closed. If it is not, press the feet button.
   a. turn the hand wheel to make sure the needle does not hit the clamping feet ❹. If they do, then take the following steps:
   b. press the feet button to open the foot
   c. loosen the screw ❺ and move the foot arm away from the needle and tighten the screw ❺ again.
   d. with the foot closed, turn the hand wheel again to see that the adjustment is correct. In that case the needle must not hit the foot.

3. ***Adjustment of pressure***
   To ensure a good quality sewing, it is important the clamp feet hold the fabric along its entire length.
   a. close the feet ❻ by pressing the feet button.
   b. loosen the nuts ❼ and turn the screw ❽ to set the feet in the right position.
   c. tighten the nuts ❼

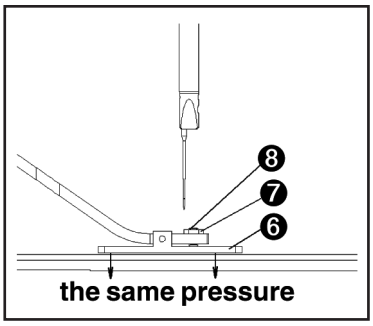

15. THREAD DRAW OFF

1. ***Adjustment of the end thread***
   If there are some skipped stitches at the beginning of sewing or the cycle is not finished, do the following:
   a. loosen the screw ❶
   b. turn the draw off lever ❷ counterclockwise so that the remaining thread in the needle gets longer.

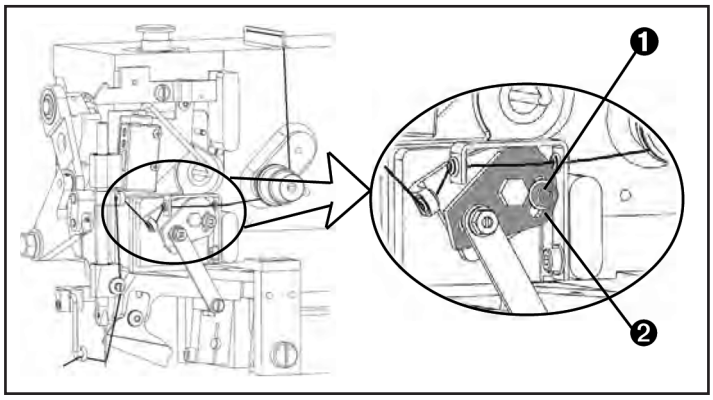

2. ***Stitching***
   Follow the above-mentioned procedure in cases some stitches ski p during sewing process. Turn the draw off lever ❷ counterclockwise. It enlarges the loops at loopers, which then catches the stitches better .

Released: 01/2021
E-mail: info@amfreece-cars.cz

E - STANDARD MACHINE ADJUSTMENT

16. THREAD TENSION

Correct thread tension affects the final appearance of sewing. The tension changes with the change of material sewn. The thinner and the more elastic material is, the wider the thread tension must be opened.
When replacing any part affecting the thread passing, check the smooth finish of surfaces getting in touch with thread.

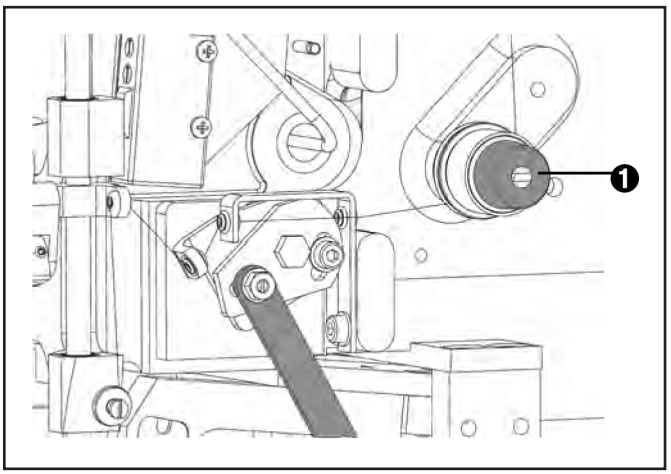

- Turn the tension knob ❶ clockwi se to increase the thread tension.
- Turn the tension knob ❶ counterclockwi se to decrease the thread tension.

NOTE: If there is too much thread tension when sewing light and elastic materials, the workpiece can deflect in the sewing area and the final look is not nice.

17. THREAD TRIMMING

The trimming mechanism ensures correct trimming of all treads after finishing the last stitch. The trimming hook, which moves in the direction of the arrow, pulls both thread ends A, B. Once the hook is close to the uplift, it guides the left side of the loop A on the knife edge. The thread is trimmed.

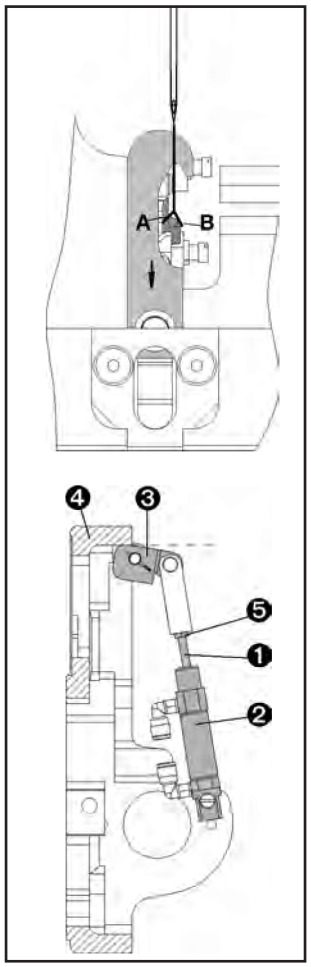

1. ***Adjustment of the trimming cylinder***

a. tilt the machine head onto the support pin and close the air supply .
Push out the piston ❶ of the cylinder ❷ to the possible limit.

b. check that the lever ❸ does not overlap the surface of the plate ❹.
If the lever is above the surface, do the following:

c. loosen the screw ❻.

d. loosen the nut ❺ and by using some tools (pliers), turn the piston ❶ of the cylinder ❷ clockwise. It will ensure the lever ❸ is in the right position.

e. tighten the nut ❺ and the screw ❻. Check, there is no axial play on the shaft ❼ after the adjustment.

f. if there is some play on the shaft, loosen the screw ❻, move the shaft ❼ to the left so that the lock ring 8 touches the cut i n the plate ❸. Move the lever to the right until it stops and tighten the screw ❻.

E - STANDARD MACHINE ADJUSTMENT

2. ***Adjustment of the trimming hook***

c. press the piston ❶ of the trimming cylinder ❷ down to the maximal limit and loosen the screw ❾ of the trimming actuator ❿.

d. turn the trimming actuator ❿ and set the 1.0 mm play between the throatplate and the trimming hook tip.

e. tighten the screw ❾ of the trimming actuator ❿.

f. open the air supply and by switching the trimming cylinder valve check that the actuator ❿ does not hit the bedplate casting.

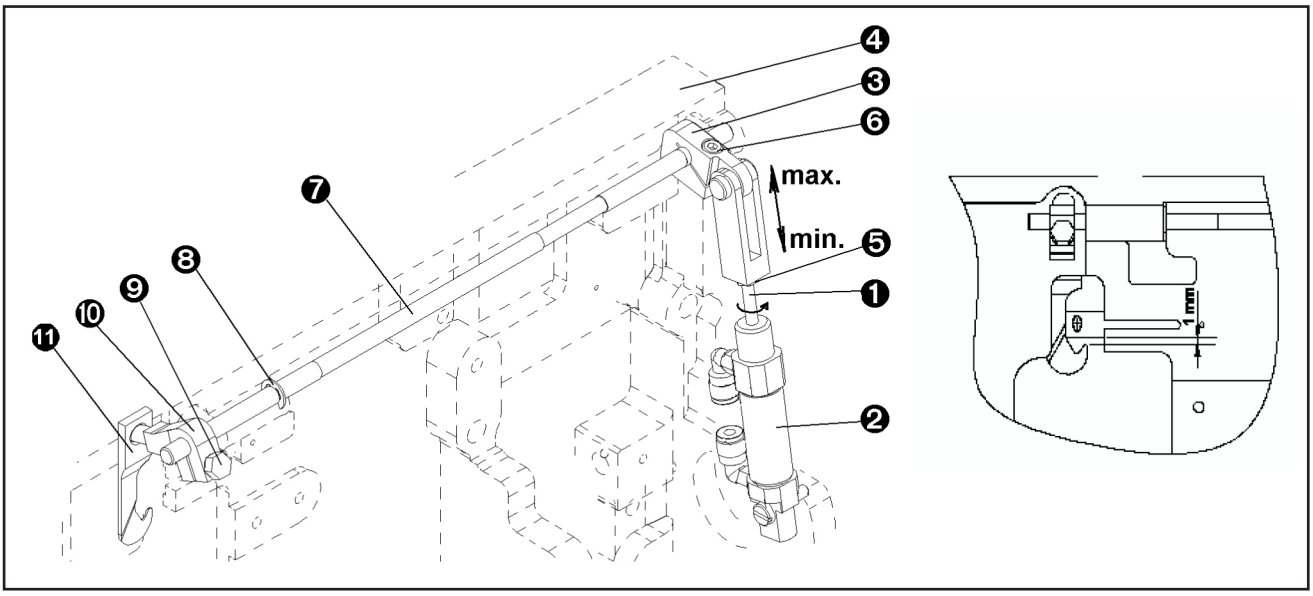

18. CUTS-OFF BLOW OFF

Cuts-off are blown off through openings in the right arm of the clamping feet by air forced in.

1. ***Regulation of airflow***
   The airflow can be regulated with a choke placed on YV7 branch.
   Turn the screw clockwise to reduce the airflow. Turn the screw counterclockwise to increase the airflow.

2. ***Regulation of air blow period***
   This function is operated directly from the operating panel display.
   Press F1→ F3 → Mater.blow. The range of air blow is 10-1000 ms.

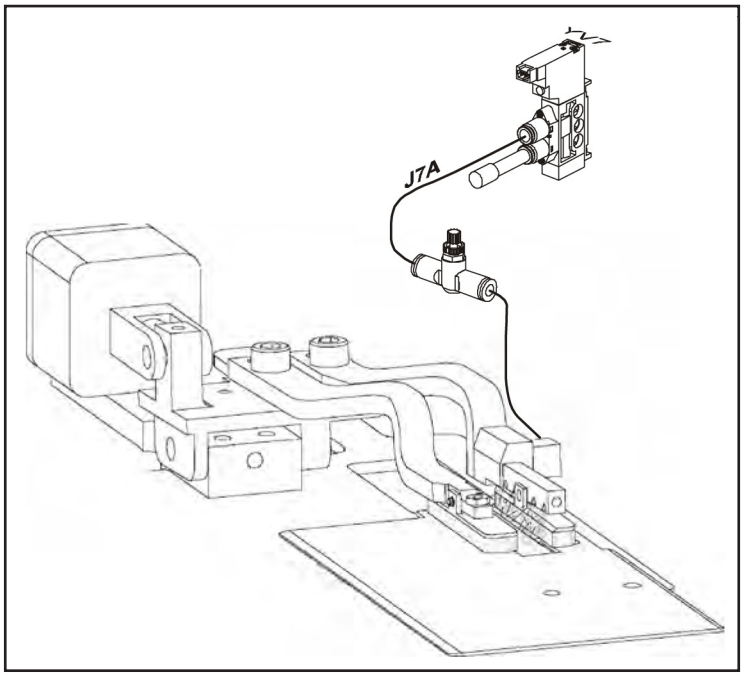

Released: 01/2021
E-mail: info@amfreece-cars.cz

E - STANDARD MACHINE ADJUSTMENT

19. THREAD BLOW OFF (SPECIAL ACCESSORY)

Thread blow off i s ensured by a pipe placed in the bedplate under the throatplate and air forced into the pipe.

1. ***Regulation of airflow***
   The airflow can be regulated with a choke placed on YV8 branch.
   Turn the screw clockwise to reduce the airflow. Turn the screw counterclockwise to increase the airflow.

2. ***Regulation of air blow period***
   This function is operated directly from the operating panel display.
   Press F1→ F3→ Thread blow Off.
   The range of air blow is 10-1000 ms.

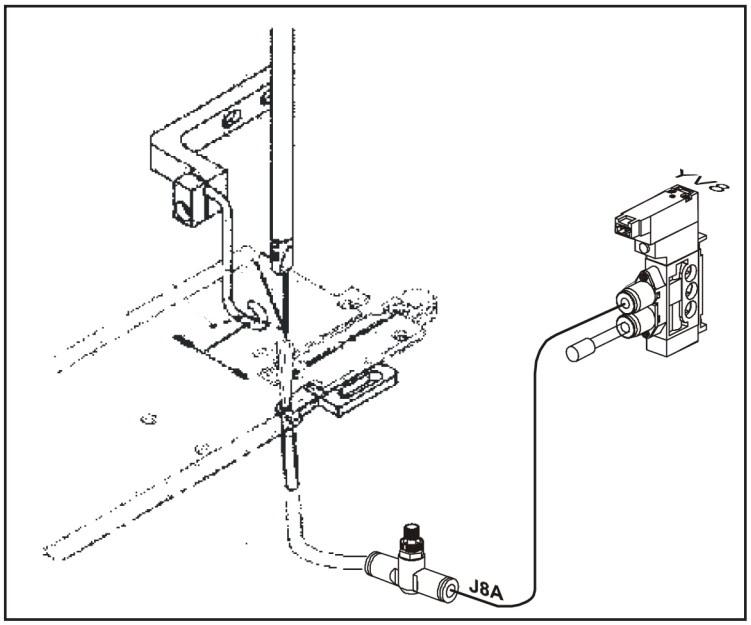

20. ADJUSTMENT OF STOP SENSOR POSITION

Follow the instructions to adjust the position of the sensor:

1. Switch the machine over into the service mode – see section E2.
2. Turn the hand wheel until the stop disc thumb ❶ is placed vertically above the sensor ❷.
3. Loosen the sensor screws ❸ and move the holder ❹ to the right to the limit position. Tighten the screws ❸.
4. Loosen the screw M3 ❺ and adjust the position of the sensor so that the stop disc thumb ❶ is center lined with the sensor marker ❻. The indicator ❼ on the sensor lights up red.
5. Tighten the screw M3 ❺.
6. Tilt the machine head back into operating position.
7. Press F6 on the control panel to bring the machine into the operation mode.
8. Switch the machine on and check the correct setting. The needle bar stops in the home (upper) position.

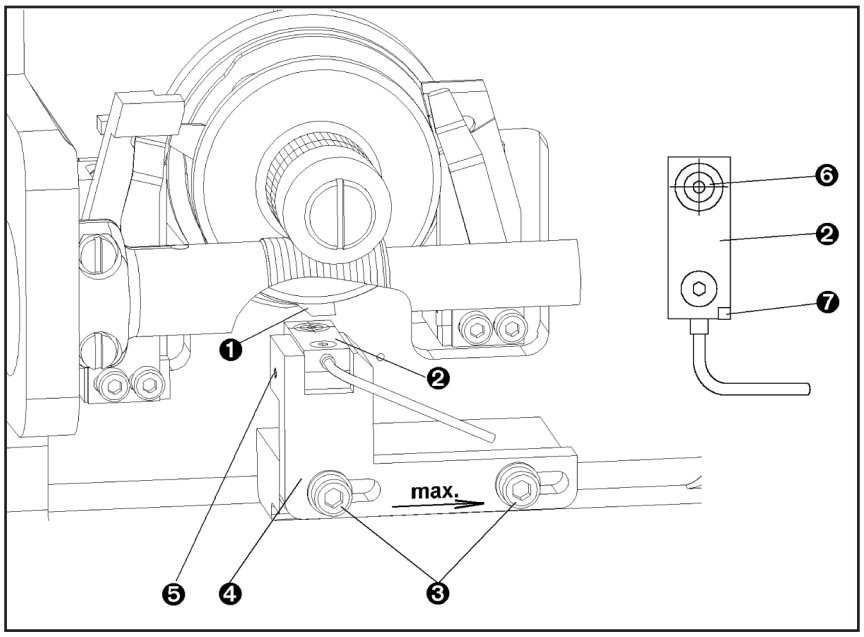

21. REPLACEMENT OF THE BELT

1. Dismantle the pulley cover ❶ by loosing the screws M4 ❷.
2. Turn the hand wheel ❸ to set the position of the shaft so that the screw ❹ on the pulley ❺ levels the screw ❻ on the bearing housing.
3. Secure the position with the holder 24.0030.0.000 ❼, which is a part of the accessory. With the screw ❻ mount the holder to the bearing housing.
4. Turn the needle bar shaft pulley ❽ until the needle bar comes to the upper position.
5. Secure the position with the holder 24.0024.0.000 ❾, which is a part of the accessory. With the screw ❿ mount the holder to the bearing housing.
6. Turn the motor pulley ⓫ until the marks ⓱ on the motor flange and roller level.
7. Loosen the screws ⓭ on the motor flange ⓮ and the motor with the flange downwards in order to mount the belt.
8. Fit the belt ⓯ onto the pulley of the shafts ❺, ❽ and motor pulley ⓫. Move the flange ⓮ together with motor ⓰ upwards. This i s the way to tension the belt ⓯. Tighten the screws ⓭ to secure the flange. Make sure the marks ⓱ are leveled.
9. Remove the pulley holders ❼, ❾.
10. Check the adjustment by pressing the pedal. The needle bar must be in the top dead centre.
11. Small changes in the position of the needle bar can be changed in program parameters:

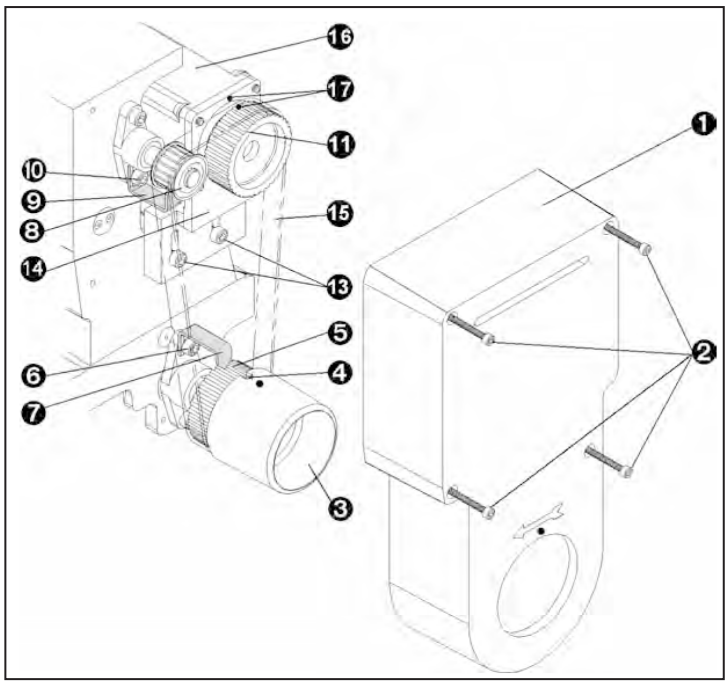

a) needle bar just before top dead centre

- ⓲ press => ⓳ „Ndl up pos ....imp“

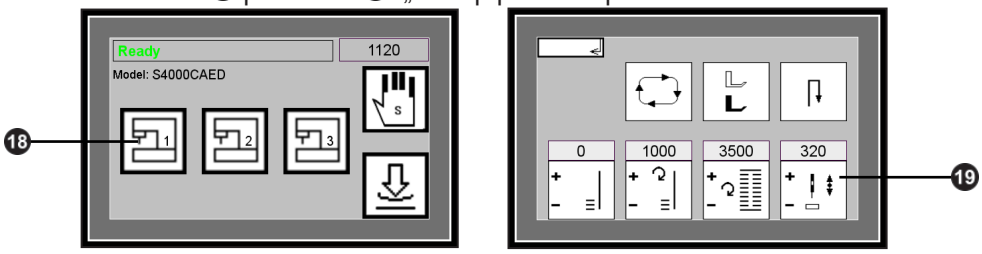

- increase the value to reach correct position of the needle bar

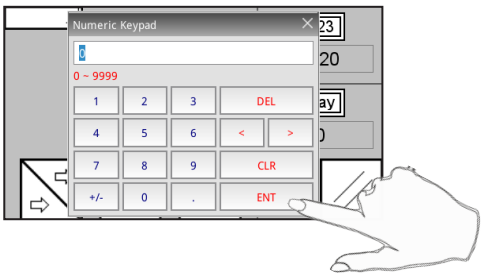

- press ⏎, to go back to the operation mode

b) needle bar behind top dead centre

- reduce the value to reach correct position of the needle bar
- press ⏎, to go back to the operation mode

E - STANDARD MACHINE ADJUSTMENT

22. PROTECTION DURING VOLTAGE FLUCTUATION (SPECIAL ACCESSORY)

The special accessory, guard voltage relay HRN-35 (VC1), is placed in the machine control box. It is pre-set and sealed from the manufacturer. If the supply voltage runs within the **required range**, the Led light **Un** on the relay lits **green**. Once the **upper limit is exceeded** (255V), the LED lights lits **red** U≷. If the **bottom limit is exceeded** (185V) the green LED light turns out and the **red** LED light U≷ comes on. The control LED lights turn out if the voltage goes back to the required values. The delay of the relay activation is set up to a minimal value.

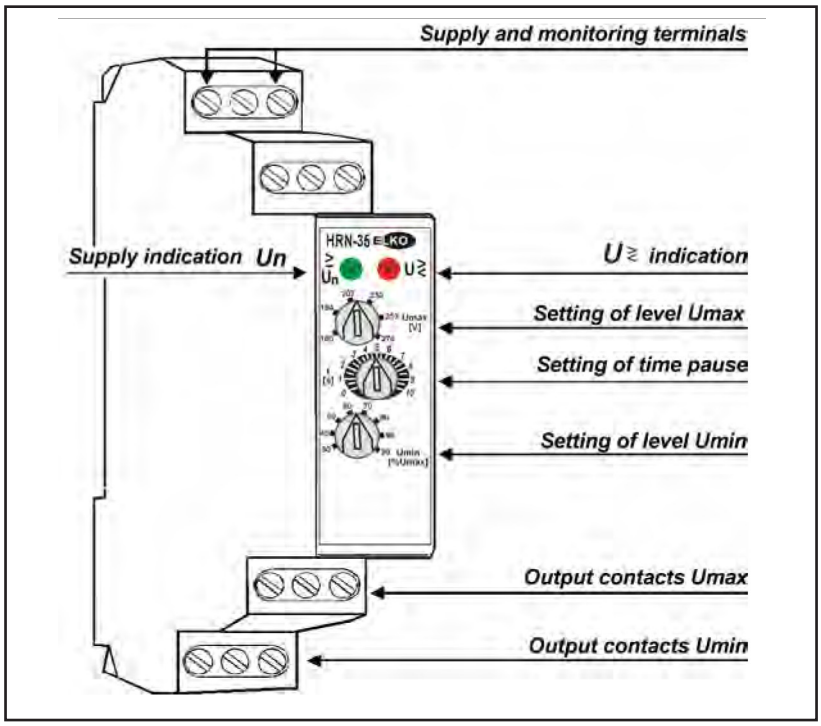

Exceeding upper supply voltage limit (255V)

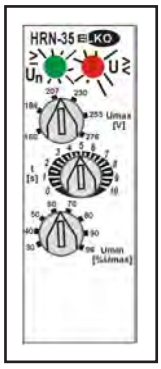

a. Turning the switch on , red LED light is on U≷. Supply voltage for electronics is cut off, the display is not illuminated, the machine ***cannot be turned on***.
b. If the limit values of the supply voltage are exceeded during sewing, the machine automatically switches off in order to prevent control electronics from damaging. Once the value gets back to normal (185V - 255V), the machine can be switched on in a standard way (see section C1).

Exceeding bottom supply voltage limit (185V)

a. Once the voltage drops below the bottom limit, the display shows the „LOW VOLTAGE“ message and the machine cannot be switched on.
b. If the supply voltage drops during sewing, the machine automatically stops and the display shows the „LOW VOLTAGE“.message.

   Once the voltage reaches the value 185V the machine can be switched on in a standard way (see section C1).

E - STANDARD MACHINE ADJUSTMENT

23. OPTICAL SENSOR - ADJUSTMENT

Loosen the holder of the optical sensor by loosing the screew M4 and adjust it i n such way so that the ray of the optical sensor projected by the sensor meets the glass eye in throat plate and returns back to sensor. The sensor is switched on. After adjusting the sensor, tighthen the screws on holder. In case the fabric is put in front of the glass eye for example, the control light of sensor is switched off.

To adjust the sensitivity of the sensor, use the control element on sensor . To decrease the sensitivity, turn this element into the left until the sensor light starts blinking. Then turn the element back until the light stops blinking. It is also possible to check the signal from sensor in output tests, see section D5.

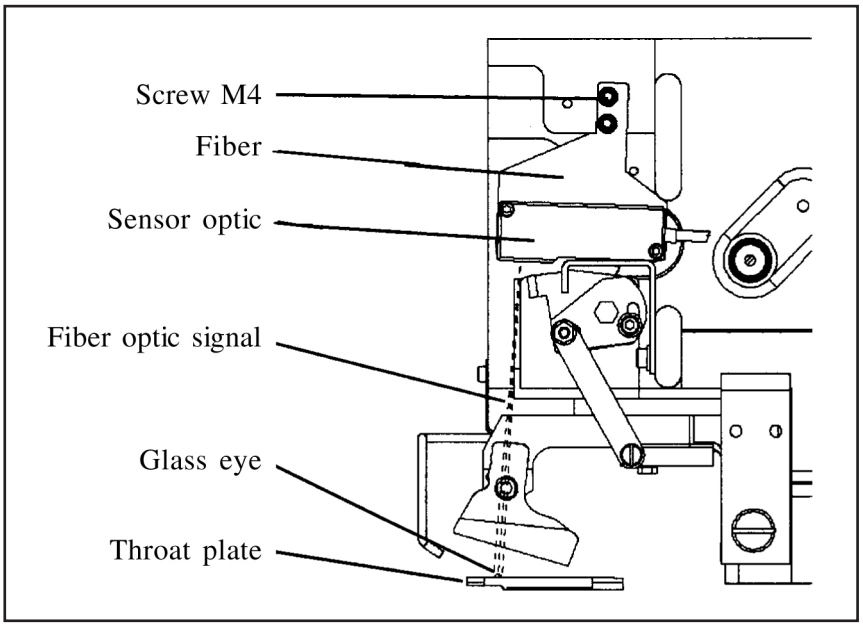

Caution! In order to ensure correct function of the sensor, keep the sensor eye clean, especially from lubrication.

Released: 01/2021
E-mail: info@amfreece-cars.cz

F - MAINTENANCE

Caution:
- Check the condition of electric cables; whether they are not damaged.
- Check that all safety covers are in good condition. Replace any damaged covers!
- Do not put your fingers in the sewing needle area in any cases!
- Do not modify the machine in any way, which interfere the safety factors.
- Do not plug in external lights or other devices into the electrical system of the machine

Warning:
- Do not miss out regular maintenance checks.
- If the electricity supply breaks down, switch off the main switch.
- Do not damage, modify or remove the safety labels.
- Do not operate the machine impaired or intoxicated.
- Make sure the workplace i s illuminated with at least 750 Luxs

1. CLEANING AND MAINTENANCE OF THE MACHINE

1. Switch off the power supply and disconnect the air supply .
2. For cleaning and lubrication dismantle the cover ❶ and take out the clamp foot mechanism ❷. Remove material waste from the clamping area.
3. Open the needle bar cover ❸ and clean the guides ❹ and thread draw off ❺ from thread waste.
4. Clean the sewing mechanism - throatplate and loopers from fabric and thread waste.
5. Lubricate the machine as in section F 4.

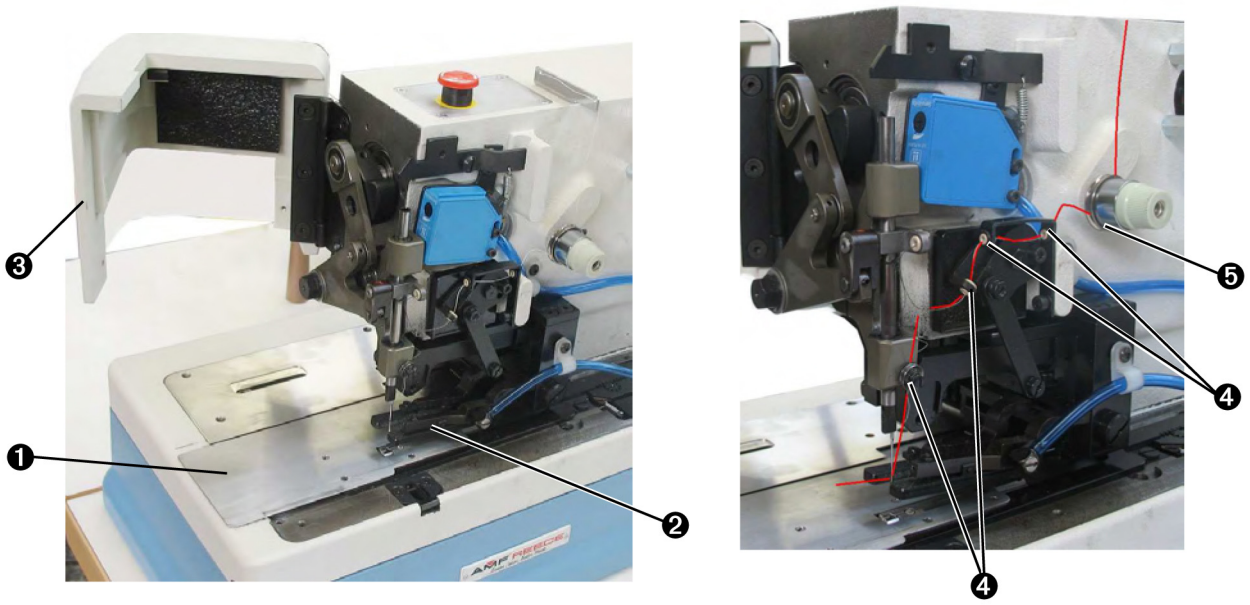

F - MAINTENANCE

6. Take out the filter cover ❻ with the cleaning pad ❼.

   Beat or hoover the pad. In case of severe fouling, wash the pad in washing liquid. Do the same maintenance with the back filter .

7. Maintenance of the filter and regulator

   Filter jar ❽ – the polycarbonate filter jar must not in any case come into contact with synthetic oil, thinning agent, coal-oil, or other aroma hydrocarbon. For cleaning purposes, use neutral cleaning agents only.

   Automatic condensate separator – maximal length of the condensate drain can be 5 m. It must be placed in the way so that the condensates can continually drain away.

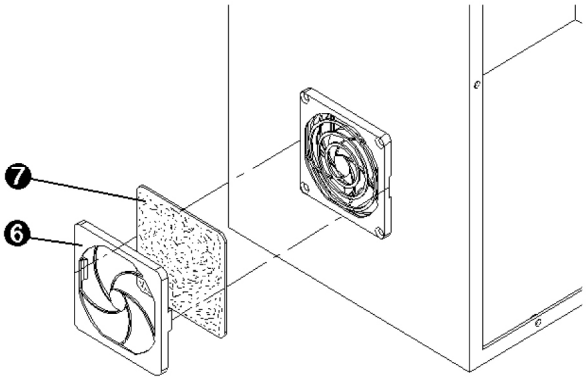

If the device does not work:

a. check, if the input pressure is bigger that the output pressure set
b. check the cleanness of the valve seating
c. check, if the spring or membrane are not damaged
d. check out the direction of air flow

Exchange of the filter pad ❾

Conditions

- decline of flow supply
- sudden drop of pressure
- if the pressure drops onto 0.7 bars
- after a year of operation (in case it has not been changed)

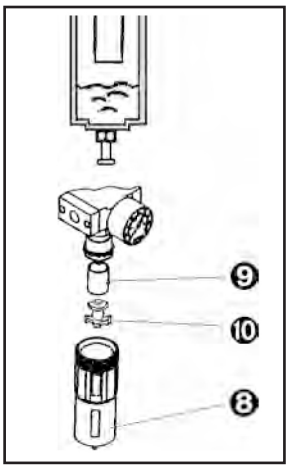

a. unscrew the filter jar ❽
b. take out the filter pad ❾ with the rectifier disk ❿
c. remove the old filter pad and replace it with anew one
d. fit the rectifier disk ❿ into the new filter pad ❾ and put both back in place
e. screw the filter jar back in

8. Check the mechanisms visually, especially the area of the sewing mechanism.
9. Once the maintenance and visual checking is completed, put the clamping foot mechanism back in place.

Released: 01/2021
E-mail: info@amfreece-cars.cz

F - MAINTENANCE

2. LIST OF REGULAR SERVICES

1x day (8 hours)	cleaning sewing devices and machine frame Lubrication of mechanisms – see section F4.
1x week (40 hours)	visual checking of internal and external mechanisms Filling the oil tank with oil
1x month (160 hours)	checking plays in sewing mechanism drive Checking screw joins (keep below mentioned values) Checking condensate in regulator Checking fouling of cleaning pads of the control box

Recommended values for srews tihtening (Nm):

M3	0,5	0,6	0,8
M4	1,2	1,5	2,0
M5	2,5	3,0	4,0
M6	4,0	5,0	7,0
M8		8,0	16,0
M10		10,0	30,0

F - MAINTENANCE

3. SCHEME OF GROUP LUBRICATION

The machine is mainly equipped with needle bearings and ball bearings, which together with a single-circuit lubrication reduce the maintenance requirements.

Circuit I – the supply of lubrication for bite levers, feeding levers and loopers, and worm gear is in the body of the oil gauge. In case of a replacement of some distribution branches, the set of hoses and wicks can be ordered. For mounting, see the picture.

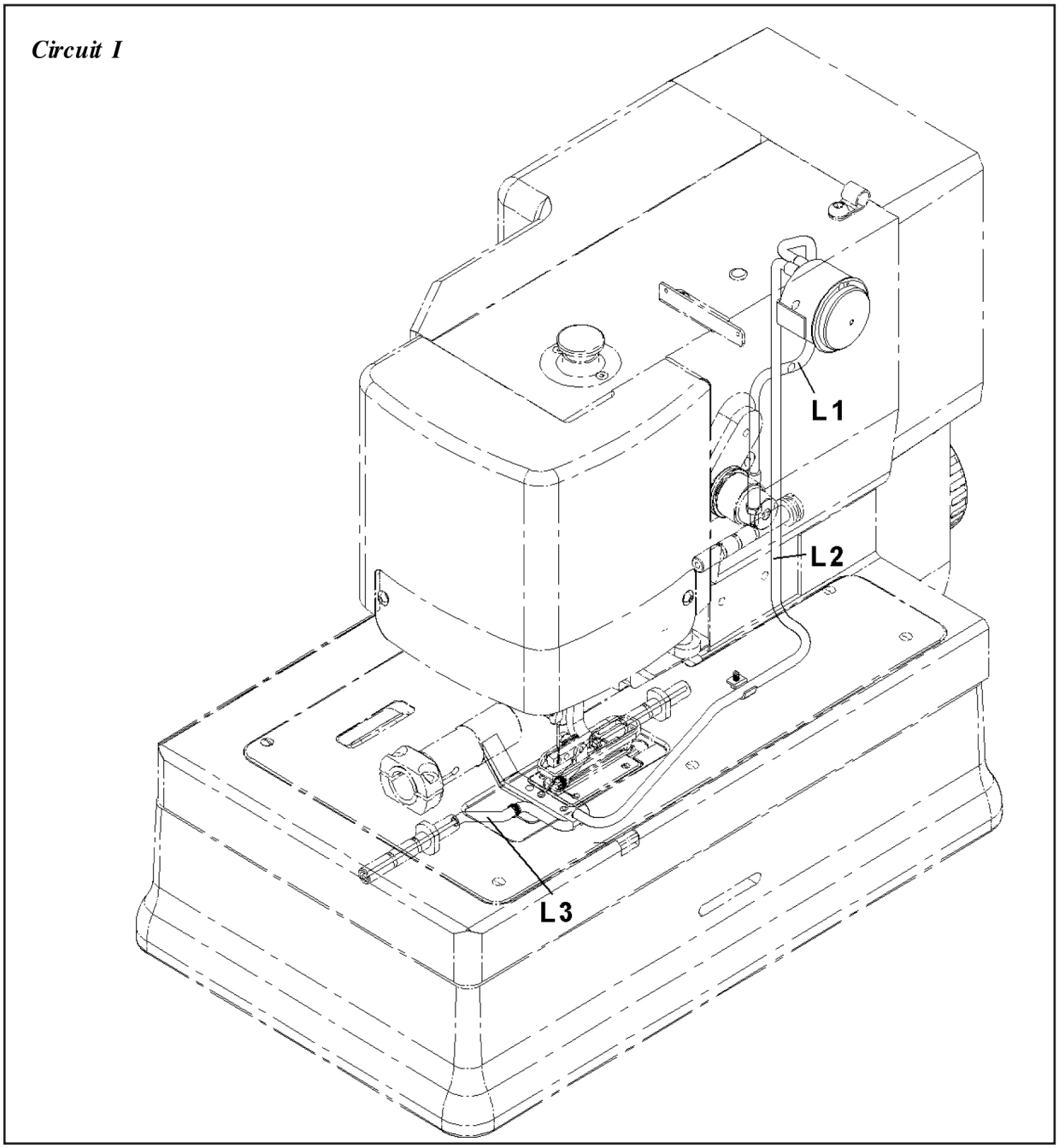

Released: 01/2021
E-mail: info@amfreece-cars.cz

F - MAINTENANCE

4. MACHINE LUBRICATION

1. Before the machine is switched on for the first time, or after a long time without any operation, it is necessary to lubricate all areas said below.

   Lubricating oil ESSO TERESSO 32 or oil of similar characteristics can be used.
2. The quantity of oil in the oil tank ❶ with an oil gauge is shown by a red mark. Too much oil can leak into the bedplate!
3. Fill the oil tank with approximately 10 cm^3 of oil through the filling hole ❷.
4. Needle bar mechanism ❸ and draw off mechanism ❹ can be lubricated after opening the needle bar cover ❺. It is also necessary to oil the main cam worm gear through the oiling opening ❻. Areas shown in the picture must be lubricated once (1x) a day (8 hours).

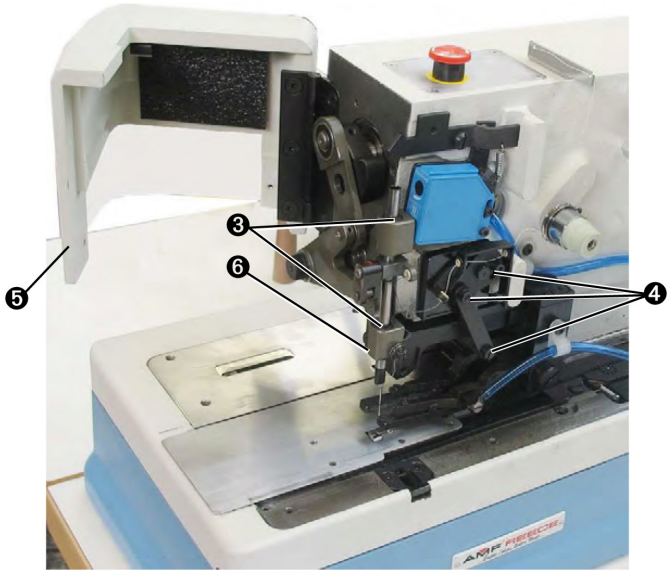

F - MAINTENANCE

5. Tilt the machine head onto the support pin and lubricate the areas shown in the picture.

❼ loppers shaft
❽ feeding shaft
❾ gearwheel
❿ looper cam
⓫ feeding cam
⓬ bite cam
⓭ trimming shaft

Bring the machine head back into the operation position.

6. Once the machine is well oiled, it is efficient to run the machine at least 10 times with testing material in order to prevent sewn workpieces from possible stains and to wipe out visible oil remains on the machine.

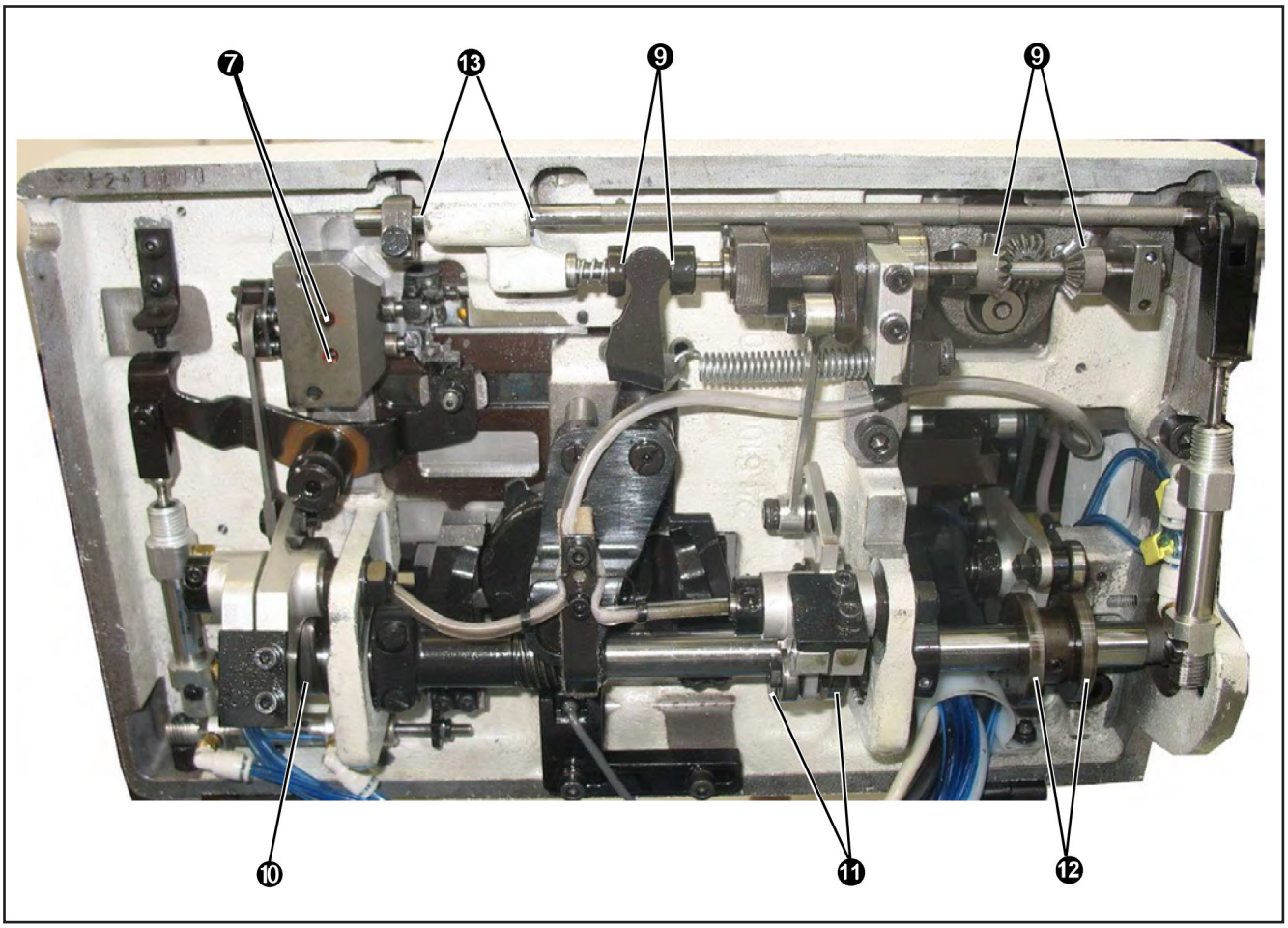

Released: 01/2021
E-mail: info@amfreece-cars.cz

F - MAINTENANCE

5. DISPOSAL MEASURES

1. To ensure correct disposal of the machine following environmental measures, it is important to remove non-metal parts from the machine. Once such parts are taken out, it is necessary to parti ally dismantle the machine; remove covers, disassemble the machine arm and take it out of the frame.
2. Aluminum and hard aluminum parts, non-ferrous metal parts and plastic parts must be disposed separately.
3. Parts described in ad 2 are marked in the spare parts manual as follows:
   - ● aluminum parts
   - ●● non-ferrous metal parts
   - ●●● plastic and non metal alloys

   Note: parts assemblies containing aluminum parts, non-ferrous metal parts, steel parts and plastic parts must be dismantled first and then sorted into groups (●,●●,●●●).

G - PNEUMATIC DIAGRAM

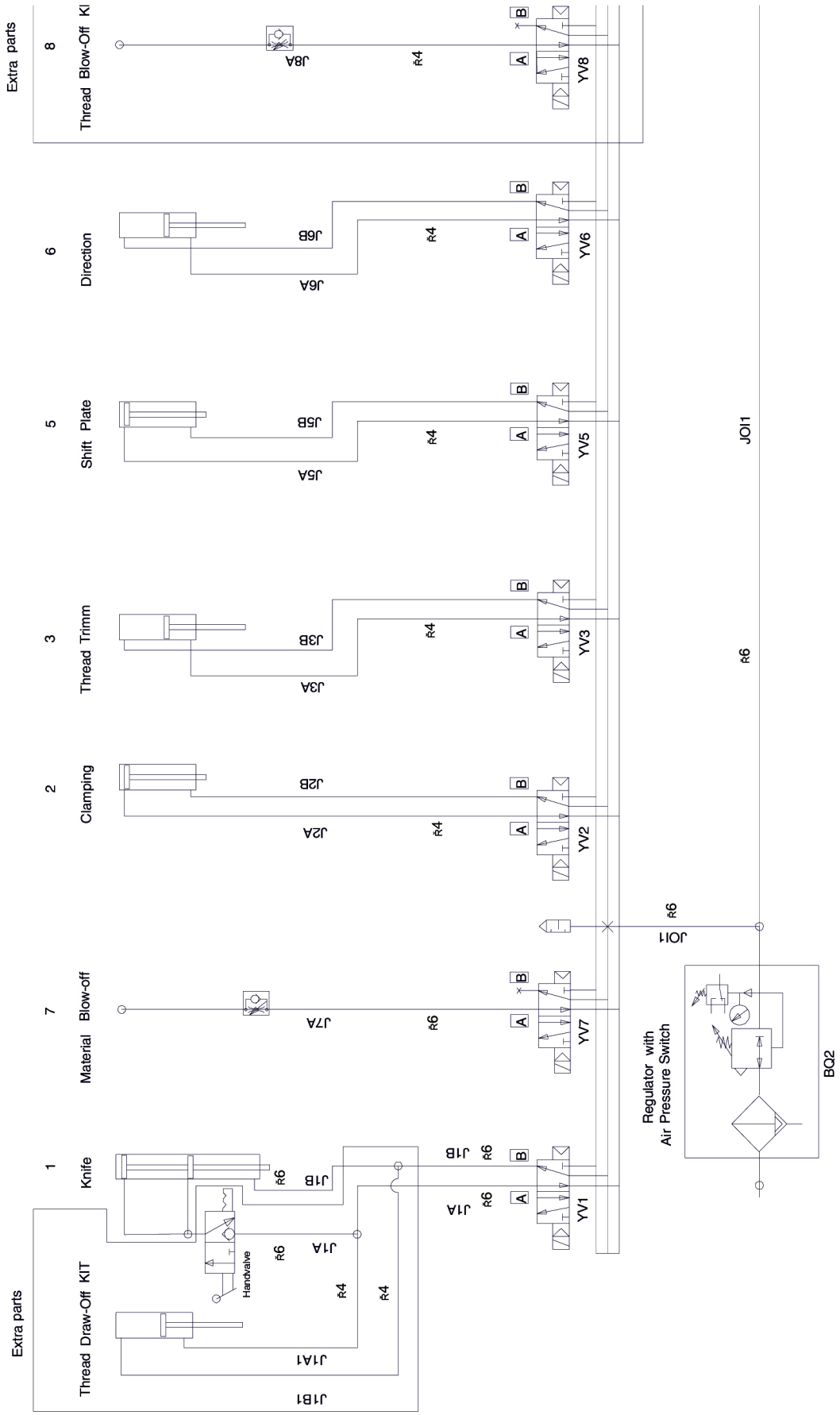

Released: 01/2021
E-mail: info@amfreece-cars.cz

H - ELECTRICAL DIAGRAM

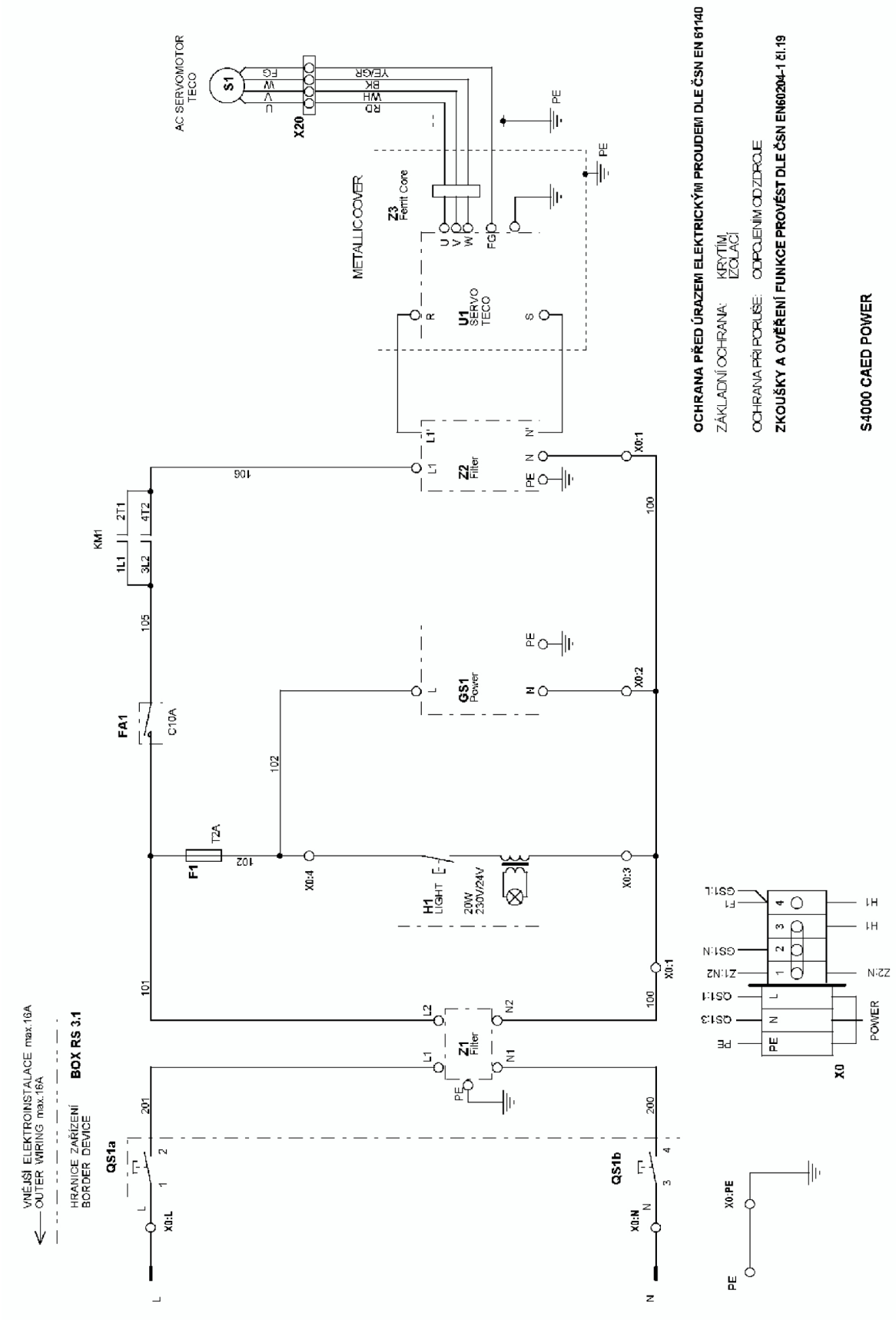

H - ELECTRICAL DIAGRAM

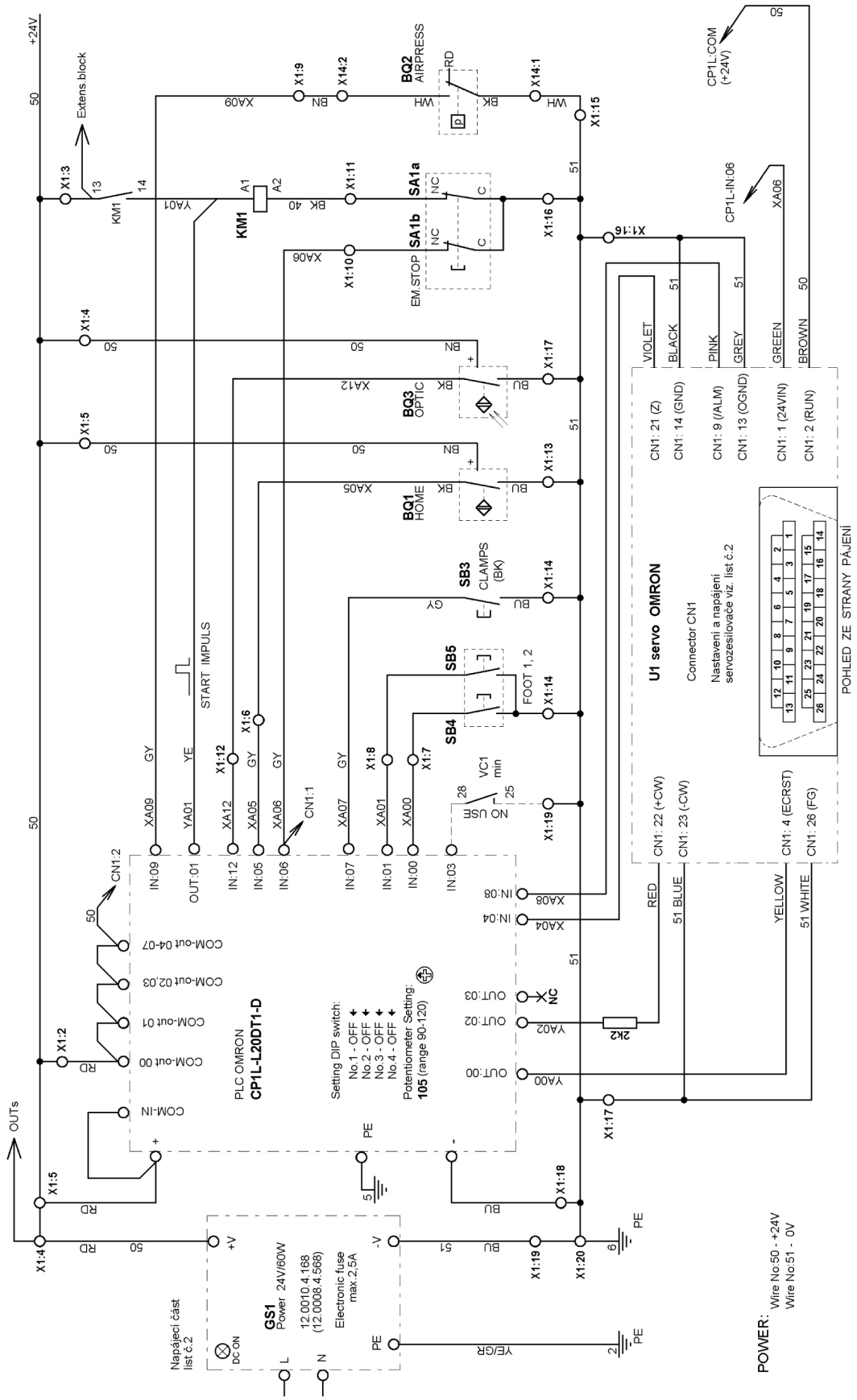

Released: 01/2021
E-mail: info@amfreece-cars.cz

H - ELECTRICAL DIAGRAM

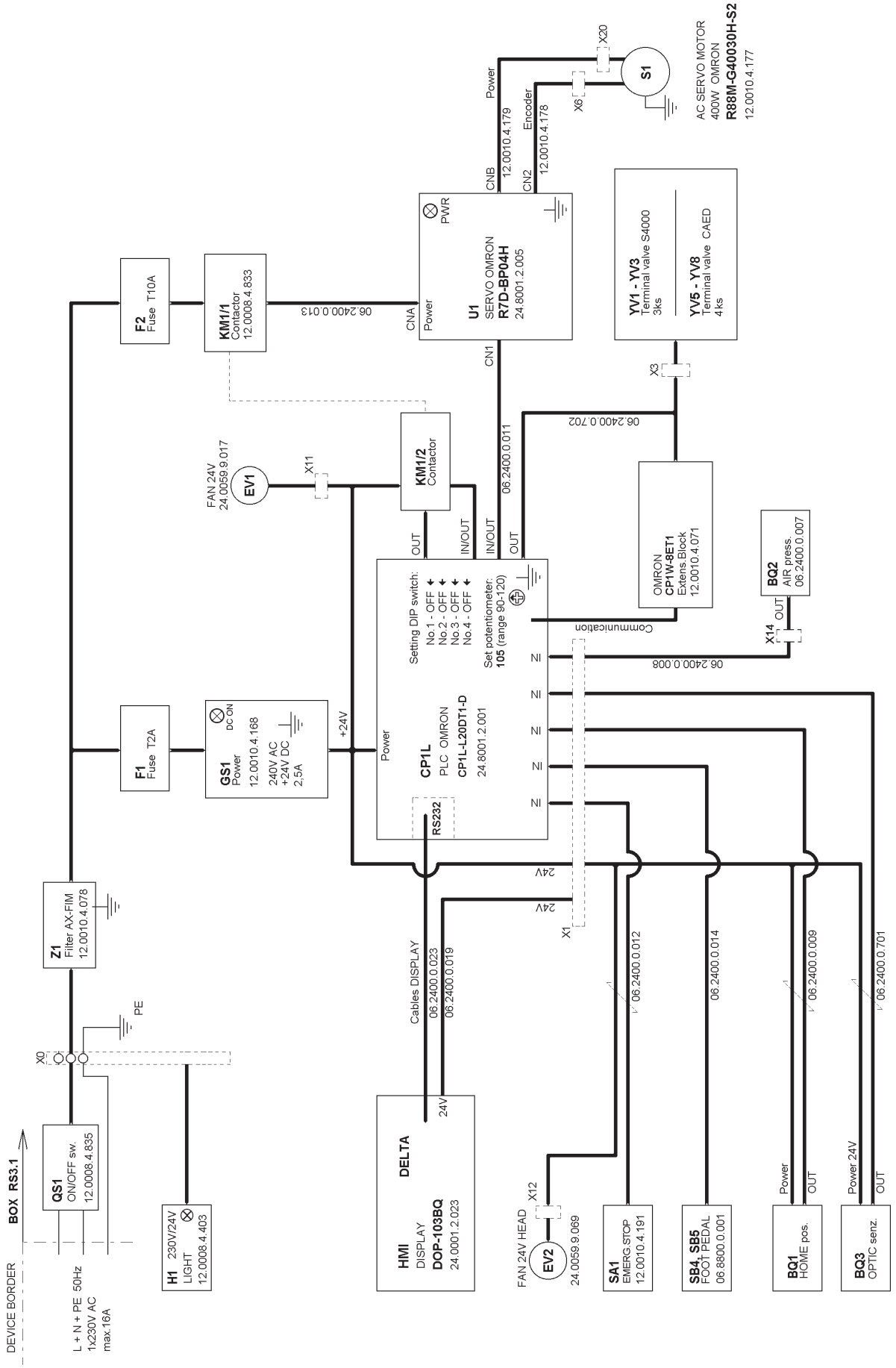

H - ELECTRICAL DIAGRAM

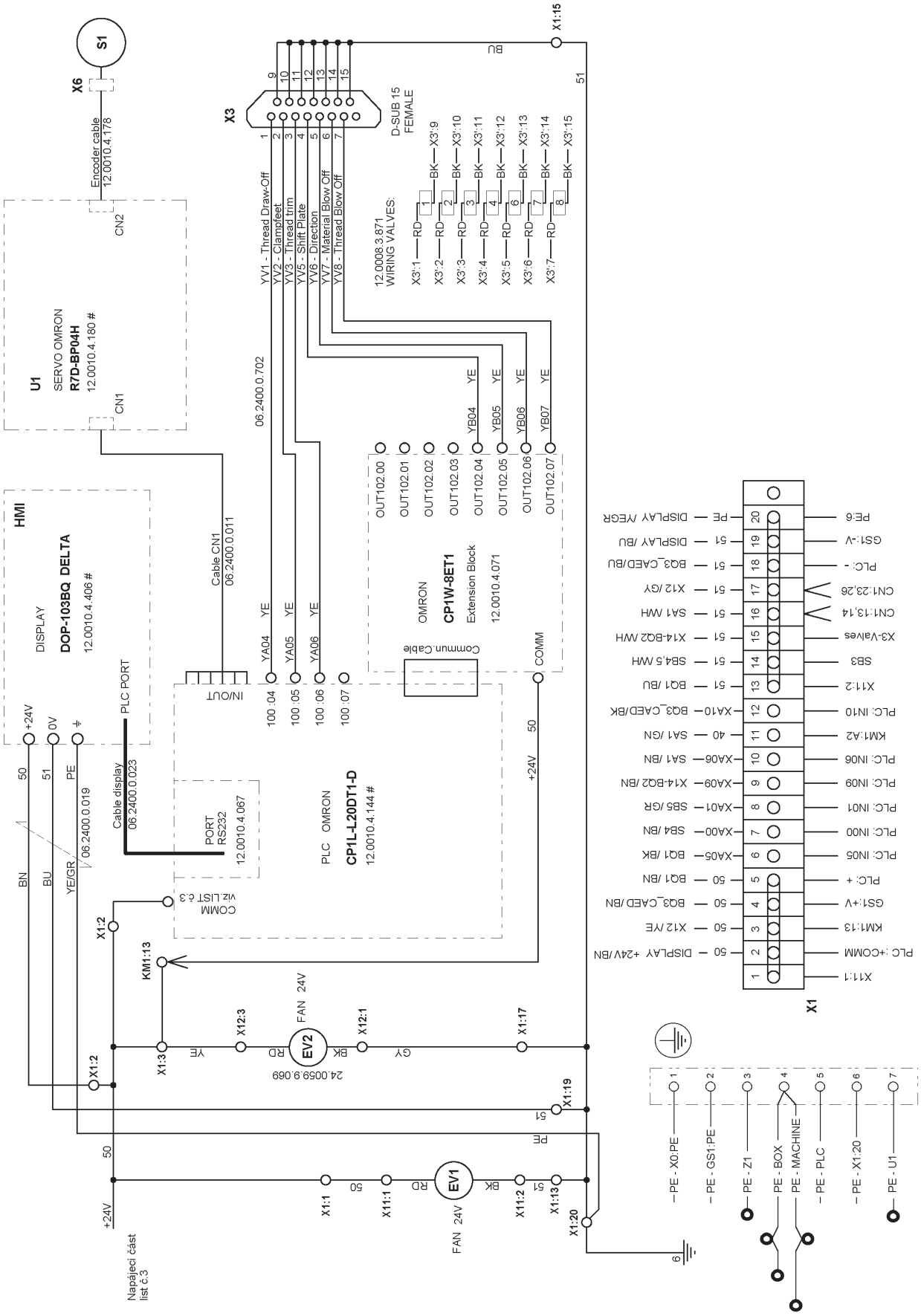

Released: 01/2021
E-mail: info@amfreece-cars.cz

TROUBLESHOOTING

1. Mechanical Faults..... 2-2
2. Error Messages Of The Control Panel Display.....2-4
3. Error Messages Of The Servo..... 2-4
4. Electrical Faults..... 2-6

TROUBLESHOOTING

1. MECHANICAL FAULTS

SYMPTOM	POSSIBLE CAUSE	PROBABLE SOLUTION
Thread breakage	Needle, looper, throat plate damaged	Change damaged parts
	Incorrect needle and sewing mechanism adjustment	Check the adjustment of the mechanisms
	Thread tension is too tight	Adjust correct tension
	Incorrect threading	See section C3 for checking.
	Thread guides polished incorrectly	Polish
	Poor thread quality	Replace thread
	Thread is too heavy for selected needle and throat plate	Use recommended thread sizes -see section A4
Machine fails to sew (Stitch skipping)	Needle, looper, throat plate damaged	Change damaged parts
	Incorrectly adjusted needle bar height	See section E4, point 2 for checking
	Incorrectly adjusted clearance between needle and throat plate	See section E5, point 3 for checking
	Incorrect loopers timing	See section E9 for checking
Machine sews in one spot	The home position of the clamp plate is adjusted incorrectly.	Adjust the stop - see section E11
Stitch skip at the beginning of sewing	Needle, looper, throat plate damaged	Change damaged parts
	Needle thread end is too short	See section E15, point 1
	Incorrectly adjusted needle bar height	See section E4, point 2
	Incorrectly adjusted clearance between needle and throat plate	See section E5, point 3
	Incorrect loopers timing	See section E9
	Incorrectly adjusted clamp feet pressure	See section E14, point 3
	The home position of the clamp plate is adjusted incorrectly.	See Section E10 to do the right adjustment

Revised: 01/2021
E-mail: info@amfreece-cars.cz

TROUBLESHOOTING

SYMPTOM	POSSIBLE CAUSE	PROBABLE SOLUTION
Stitch skip during sewing	Needle, looper, throat plate damaged	Change damaged parts
	Incorrectly adjusted needle bar height	See section E4, point 2
	Incorrectly adjusted clearance between needle and throat plate	See section E5, point 3
	Incorrect loopers ti ming	See secti on E9
	Incorrect thread tension adjustment	Adjust the tension correctly for section E16
	Incorrect threading	See section C3
	Thread loops are too small	See section E15 point 2
	Incorrectly adjusted clamp feet pressure	See section E14 point 3
	The clamp feet are adjusted too far from the sewing	See section E14 point 2
Thread not trimmed at the end of the cycle	Trimming knife damaged	Replace
	Low air pressure at trimming cylinder	Check supply pressure
	Incorrect loopers timing	See section E9
	Incorrect setting of trimming delay	Change Trim delay parameter-D4
	Trimming length incorrectly set	Change Trim time parameter-D4
The fabric is not cut at the end of the cycle	The trimming knife is damaged	Re-sharpen or replace with a new one
	The edge of the stitching plate is damaged	Re-sharpen or replace with a new one
	Low pressure in the cylinder	Check the supply pressure
	The trimming mechanism to cut fabric adjusted incorrectly	Check with the instructions provided in Section E12
Sewing motor turns, machine does not sew	Belt broken or loose	See section E21 for changing
Machine sews continually, does not stop	Stopping sensor adjusted incorrectly	See section E20 for correct position adjustment
Zero pressure on regulator	Shut off valve closed	Open the shut off valve
Low air pressure	Filter element dirty	Change the filter element
	Air fitting or tubing obstruction	Check supply guides

2. ERROR MESSAGES OF THE CONTROL PANEL DISPLAY

SYMPTOM	POSSIBLE CAUSE	PROBABLE SOLUTION
Low air pressure	Hand valve of the regulator switched off (if assembled)	Open the hand valve
	The air pressure in the air supply piping below 0.5 MPa	Increase the air pressure
Emergency stop, red LED light is ON	Emergency Stop button is switched on	Release the Emergency Stop button and press F6 key on the control panel
Service mode	The machine is in the service mode, motor is disconnected	Press F6 key on the control panel

3. ERROR MESSAGES OF THE SERVO

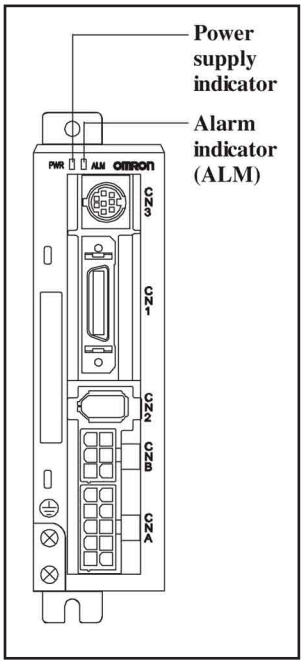

PWR - Power supply indication:

INDICATOR	STATUS
Lit green	Voltage is good
Lit orange - Flashes at a 1 sec. intervals	Varning - i.e.: - Exceeded power - Exceeded feed back - Default of inner fan
Lit red	Alarm - default

ALM - Default indication (Alarm indicator):
in case default appears, the indicator is switched on.

Alarm indicator on the Servo Drive

The alarm LED indicator on the front of the Servo Drive lights up if an error is detected. The indicator shows the alarm code by the number of orange and red flashes.

Example:
When an overload alarm (alarm code 16) has occurred and the Unit has stopped the indicator will flash in orange and 6 times in red.
Orange 10s digit, Red: 1s digit

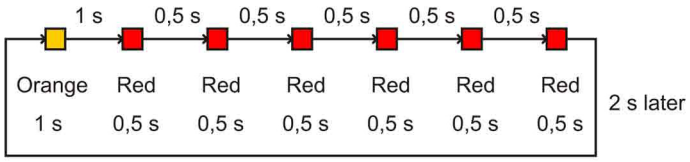

Revised: 01/2021
E-mail: info@amfreece-cars.cz

TROUBLESHOOTING

Alarm code	Error detection function	Detection details and cause of error	Alarm reset possible
11	Power supply undervoltage	The DC voltage of the main circuit fell beloww the specificed value while the RUN Command Input was ON	Yes
12	Overvoltage	The DC voltage of the main circuit is abnormally high	Yes
14	Overcurrent	Overcurrent flowed to the IGBT. Servomotor power line ground fault or short circuit	No
15	Built-in resistor overheat	The resistor in the Servo Drive is abnormally overheating	No
16	Overload	Operation was performed with torque significantly exceeding the rated level for several seconds to several tens of seconds.	Yes
18	Regeneration overload	The regeneration energy exceeded the prosessing capacity of the regeneration resistor.	No
21	Encoder disconnection detected	The encoder wiring is disconnected.	No
23	Encoder data error	Data from the encoder is abnormal.	No
24	Deviation counter overflow	The number of accumulated pulses in the deviation counter exceeded the seting in the Deviation Counter Overflow Level (Pn63)	Yes
26	Overspeed	The servomotor exceeded the maximum number of rotations. If the torque function was used, the Servomotor´s rotation speed exceeded the settings in the Overspeed Detection Level Setting (Pn70 and Pn73)	Yes
27	Electronic gear setting error	The section in Electronic Gear Ratio Numerator 1 (Pn46) or Electronic Gear Ratio Numerator 2 (Pn47) is appropriate.	Yes
29	Deviation counter overflow	The number of accumulated pulses for the deviation counter exceeded 134,217,728.	Yes
34	Overrun limit error	The servomotor exceeded the allowable operating range set in the Overrun Limit Setting (Pn26).	Yes
36	Parameter error	Data in the parameter saving area was corrupted when data was read from the FEPROM at power ON.	No
37	Parameter corruption	The checksum didn´t match when data was read from the FEPROM at power ON.	No
38	Drive prohibit input error	The forward drive prohibit and reverse drive prohibit inputs are both turned OFF.	Yes
48	Encoder phase Z error	A phase-Z pulse was not detected regularly	No
49	Encoder CS signal error	A logic error of the CS signal was detected	No
95	Encoder CS signal error	The combination of the Servomotor and Servo Drive is not appropriate. The encoder was not connected when the power supply was turned ON.	No
96	LSI setting error	Excessive noise caused the LSI setting not to be completed properly.	No
Others	Other errors	The servo Drive´s self-diagnosis function detected an error in the Servo Drive.	No

TROUBLESHOOTING

4. ELECTRICAL FAULTS

FAULT	POSSIBLE CAUSE	PROBABLE SOLUTION
When switch in position **I**, neither the work light, display or the cooling fan operate	No power supply	Check main power supply or voltage in the socket
	Fuse F1 failure	Replace fuse PN 12.0008.4.665
	Power switch QS1 damaged	Replace the switch 12.0008.4.835
	Power GS1 failure	Replace the power 12.0010.4.168
When switch in position **I**, display does not operate	Cable from the display disconnected	Check the display connection
	Display or its control damaged	Replace display PN 24.8001.2.002 or control unit PLC 24.8001.0.001, call AMF Reece Service
When sewing operation started, motor does not operate. Contactor **KM1** switched on.	Fuse F2 damaged	Replace fuse 12.0008.4.664
	Contactor KM1 damaged	Replace contactor 12.0008.4.833
	Servo U1 error or filter Z2 error	Call AMF Reece service or replace servo U1 (page 2-9) or filter Z2 (page 2-9)
	Error in sewing motor circuit	Switch the machine off for 1 minute, or restart it, alternatively call AMF Reece service
When switching the machine on, the display shows a wrong model of the machine (i.e. S4000 ISBH instead of S4000 BH)	Incorrect PLC setting	Set the potentiometr on the PLC as in the electric diagram – see Service chapter, Section H)
When sewing operation started, motor fails to operate. Contactor **KM1** switched off	Make sure the machine is ready for operation	Press key F6 - see D1, point 6
	Contactor KM1 damaged	Replace contactor 12.0008.4.833
	Check the Emergency Stop button	Replace button 12.0008.4.563
	Control unit PLC error	Replace the control unit PLC 24.8001.2.001
The needle does not stop in the upper position	Position of the sensor BQ1 incorrectly adjusted	Adjust according to section E17
	Sensor BQ1 failure	Replace the sensor 06.2400.0.009
	Check the servo amplifier and servomotor	T o set the servo amplifier - call AMF Reece service, alternatively replace motor (page 2-9) and servo amplifier (page 2-9)
When sewing operation started, air valves do no operate. The air pressure correct.	Fork is not fitted properly into connector X3	Check the connector X3 connection
	Control unit PLC error	Replace the control unit 24.8001.2.001
The machine does not respond to the signal from the sensor BQ3	The position of the sensor BQ3 adjusted incorrectly	Adjust correctly as in Section E23
	Faulty sensor BQ3	Replace the sensor 06.2400.0.701

TABLE OF CONTENTS

Needle Bar....3-2
Clamping....3-4
Thread Trimmer....3-6
Shifter Mechanism....3-8
Feed Mechanism....3-10
Looper Mechanism....3-14
Base....3-16
Bite Mechanism....3-18
Knife and Draw....3-20
Main Cam....3-24
Head Assembly....3-26
Bedplate....3-28
Covers....3-32
Lubrication....3-34
Table....3-36
T able - Roller Kit - Extra Parts....3-38
Electrical — I....3-40
Electrical — II....3-42
Electrical — III....3-44
Panel Kit....3-46
Pneumatics....3-48
Accessories....3-50
Extra Parts....3-52

NEEDLE BAR

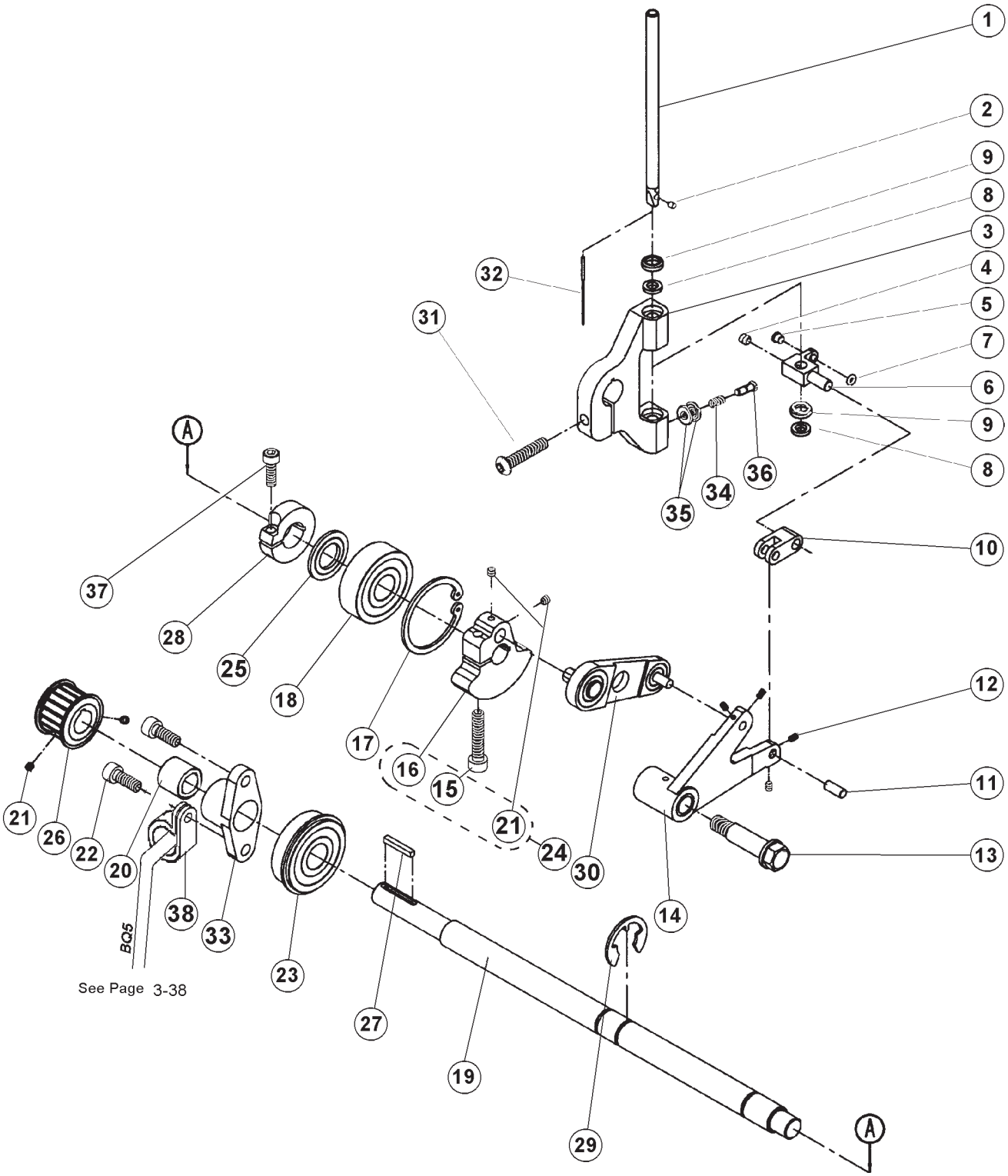

Revised: 06/2022
E-mail: info@amfreece-cars.cz

NEEDLE BAR

DET	PART NUMBER	DESCRIPTION	QTY.
01	24.0195.4.000	Needle Bar	1
02	01.2193.0.000	4-60 Screw	1
03	22.0510.0.000	Needle Bar Holder ●	1
04	08.6400.5.005	M5 x 5 Set Screw	1
05	01.7447.1.000	Porcelain Guide ●●●	1
06	22.0520.0.000	Needle Bar Clamp	1
07	01.6551.0.000	Retaining Ring ●●●	1
08	22.0230.0.000	Cupped Washer ●●●	2
09	22.0239.0.000	Felt Washer	2
10	22.0530.0.000	Needle Bar Connecting Link	1
11	22.0542.0.000	Needle Bar Connecting Link Pin	1
12	08.6400.3.005	M3 x 5 Set Screw	4
13	22.0541.0.000	Needle Bar Shoulder Screw	1
14	22.0540.0.000	Needle Bar Connecting Link Pin ● ●●	1
15	08.6000.6.030	M6 x 30 Screw	(1)
16	22.0525.0.000	Needle Bar Crank ●	(1)
17	01.7809.0.000	Retaining Ring	1
18	01.7804.0.000	Top Shaft Bearing	1
19	24.0500.0.000	Needle Bar Drive Shaft	1
20	12.2050.0.003	Bearing	1
21	08.6400.4.004	M4 x 4 Set Screw	2 (2)
22	08.6000.6.016	M6 x 16 Screw	2
23	01.7805.0.000	Shaft Bearing	1
24	22.0525.0.050	Needle Bar Crank Asm.	1
25	22.0545.0.000	Washer	1
26	24.0048.0.000	Needle Bar Drive Pulley ●	1
27	22.0175.0.000	Drive Shaft Key	1
28	24.0002.0.000	Clamp Collar	1
29	12.1045.2.001	Retaining Ring	1
30	22.0535.0.100	Needle Bar Crank Link Asm. ●	1
31	08.6200.6.025	M6 x 25 Screw	1
32	02.0750.2.109	Needle	1
33	24.0001.0.000	Bearing Carrier Upper Shaft	1
34	17.0026.2.077	Spring	1
35	17.0082.8.017	Washer	2
36	24.0100.0.000	M3.5 x 0.35-11 Screw	1
37	08.6000.5.016	M5 x 16 Screw	1
38	See page 3-38	Plastic Cable Fitting	1

CLAMPING

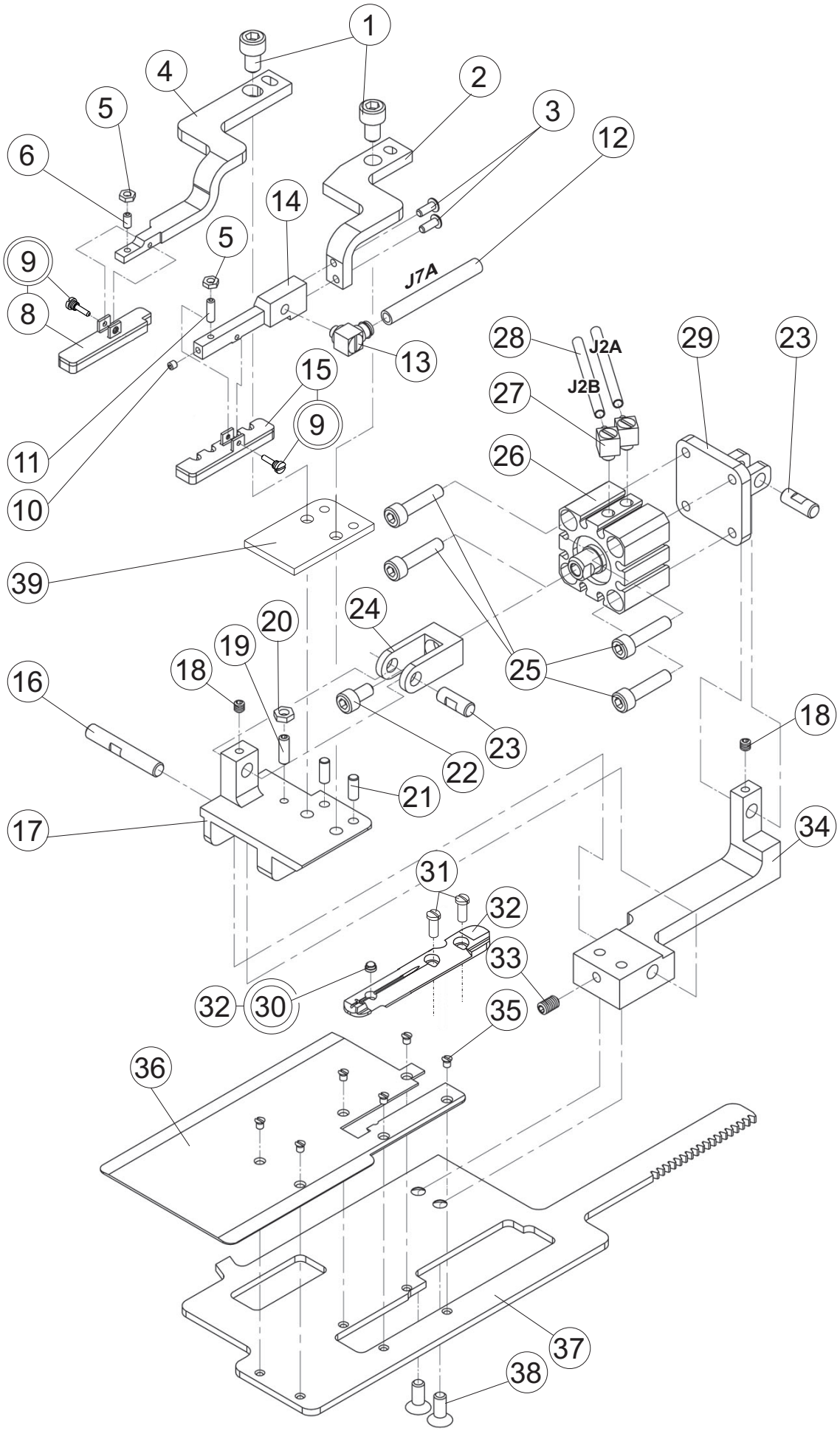

Revised: 06/2022
E-mail: info@amfreece-cars.cz

CLAMPING

DET	PART NUMBER	DESCRIPTION	QTY.
01	08.6002.6.012	M6x12 Screw	2
02	24.0227.4.000	R.H. Clamp Arm	1
03	08.6202.3.008	M3x8 Screw	2
04	24.0226.4.000	L.H. Clamp Arm	1
05	08.6712.3.000	M3 Nut	2
06	08.6402.3.006	M3x6 Set Screw	1
07			
08	24.2073.2.000	L.H. Clamp Foot ●●●	1
09	24.2076.0.000	Screw M3,5x0,35	2
10	08.6402.3.004	M3x4 Set Screw	1
11	08.6402.3.010	M3x10 Set Screw	1
12	See page 3-46	Air Tubing ●●●	-
13	See page 3-46	Connector ●	-
14	24.2064.0.000	Clamp Arm Extension	1
15	24.2074.2.000	R.H.Clamp Foot ●●●	1
16	22.0159.0.000	Tail Pivot Clamp Pin	1
17	24.0157.0.000	Tail Pivot Clamp	1
18	08.6402.4.004	M4x4 Set Screw	2
19	08.6402.4.012	M4x12 Set Screw	1
20	08.6702.4.000	M4 Nut	1
21	07.6045.0.046	Pin	2
22	08.6002.5.010	M5x10 Screw	1
23	22.0173.0.000	Clamp Toggle Pivot Pin	2
24	24.2038.0.000	Cylinder Clevis	1
25	08.6002.5.022	M5x22 Screw	4
26	See page 3-46	Cylinder ●	-
27	See page 3-46	Connector ●	-
28	See page 3-46	Air Tubing ●●●	-
29	24.0036.0.000	Cylinder Mounting Bracket	1
30	12.0008.4.477	Glass Eye ●●●	(1)
31	01.2084.0.000	Screw	2
32	24.2075.3.000	Throat Plate CAED	1
33	08.6402.5.008	M5x8 Set Screw	1
34	24.0158.0.000	Tail Bracket Clamp	1
35	01.2376.0.000	Screw	6
36	24.6102.4.004	Loading Plate	1
37	24.0125.6.000	Clamp Plate CAED	1
38	08.6102.5.012	M5x12 Screw	2
39	24.2058.0.000	Distance Plate	1

THREAD TRIMMER

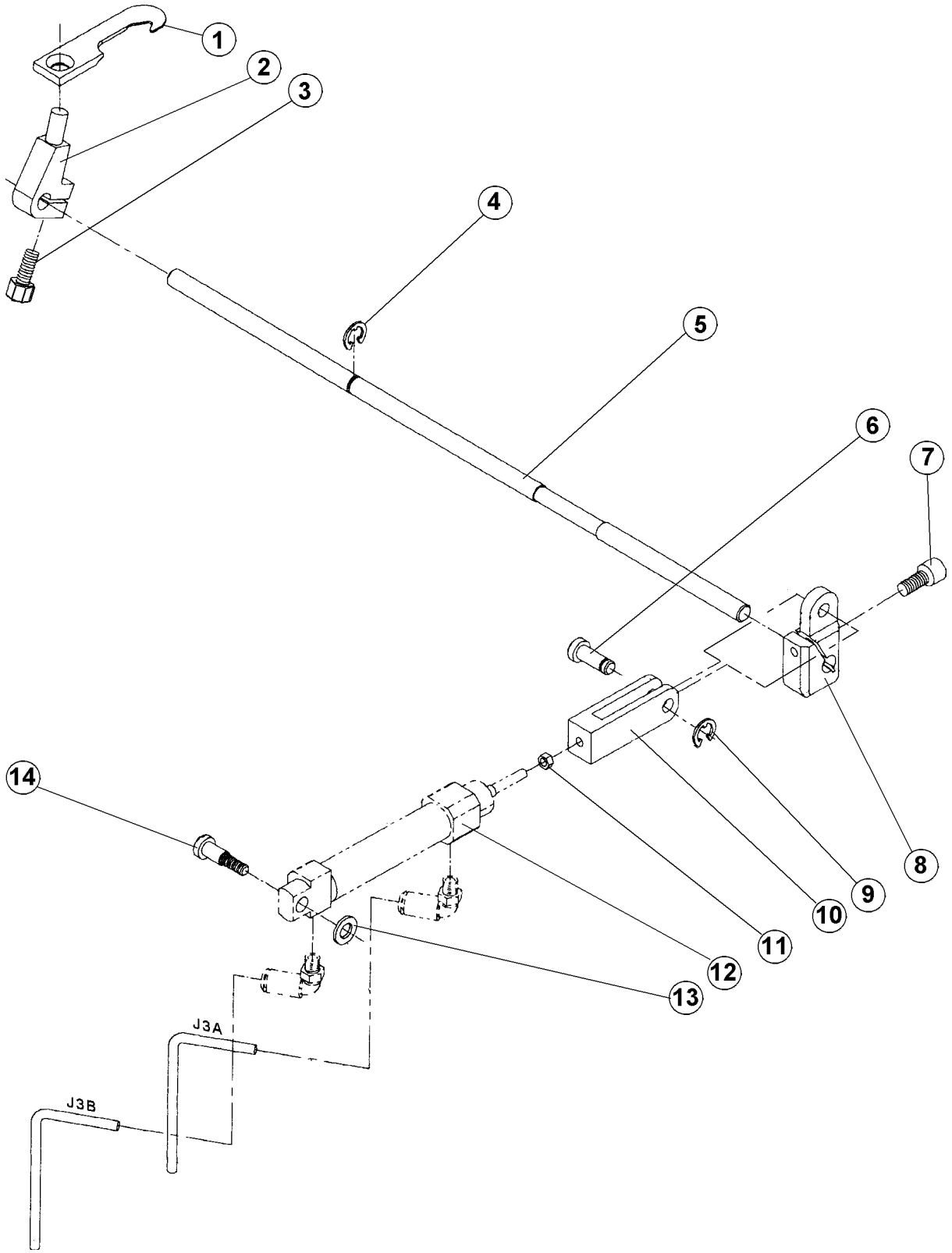

THREAD TRIMMER

DET	PART NUMBER	DESCRIPTION	QTY.
01	20.0093.2.004	Trimmer Hook	1
02	20.0092.0.004	Trimmer Actuator	1
03	01.2386.0.000	3/16-36 x .5 Hex Screw	1
04	12.1045.3.001	E-Clip	1
05	24.0080.0.000	Trimmer Shaft	1
06	24.0003.0.000	Trimmer Pivot	1
07	08.6000.4.012	M4 x 12 Screw	1
08	24.0004.0.000	Trimmer Clamp Lever	1
09	07.6045.0.042	E-Clip	1
10	24.0005.0.000	Clevis	1
11	08.6700.4.000	M4 Nut	1
12	See Page 3-46	Trimmer Cylinder ●	—
13	08.6852.6.000	Washer	1
14	24.0006.1.000	Pivot Screw	1

SHIFTER MECHANISM

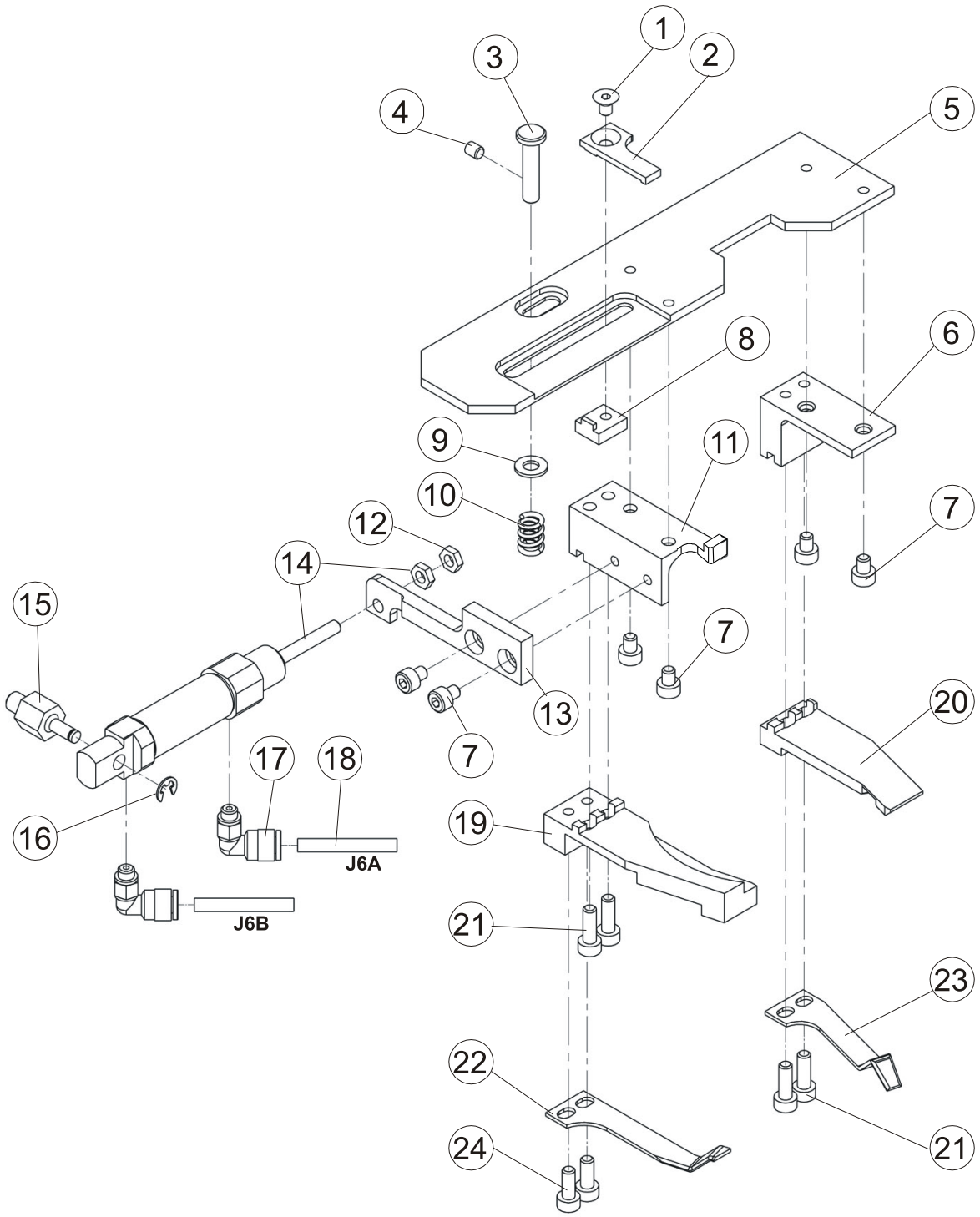

Revised: 06/2022
E-mail: info@amfreece-cars.cz

SHIFTER MECHANISM

DET	PART NUMBER	DESCRIPTION	QTY.
1	08.6100.4.006	M4x6 Screw	1
2	24.2664.4.000	Buttonhole Adjusting Link	1
3	22.0400.0.000	Spring Load Pin	1
4	08.6400.4.005	M4x5 Set Screw	1
5	22.2665.0.000	Main Cam Shifter Plate	1
6	22.2655.0.000	Right Shifter Block	1
7	08.6000.4.005	M4x5 Screw	6
8	22.0405.2.000	Adjustable Link Nut	1
9	08.6887.5.000	Washer M5	1
10	07.6440.0.040	Spring	1
11	24.2651.4.001	Left Shifter Block	1
12	08.6710.4.000	Nut M4	1
13	24.2016.0.000	Shifter Pull Of Bracket	1
14	See Page 3-46	Cylinder ●	-
15	24.2017.0.000	Air Cylinder Mounting Post	1
16	07.6045.0.047	E-clip	1
17	See Page 3-46	Conector ●●●	-
18	See Page 3-46	Air Tubing ●●●	-
19	22.2652.0.000	Left Shifter Arm	1
20	22.2656.0.000	Right Shifter Arm	1
21	08.6000.4.016	M4x16 Screw	4
22	22.2653.0.000	Left Shifter Arm Spring	1
23	22.2657.0.000	Right Shifter Arm Spring	1
24	08.6000.4.010	M4x10 Screw	2

FEED MECHANISM

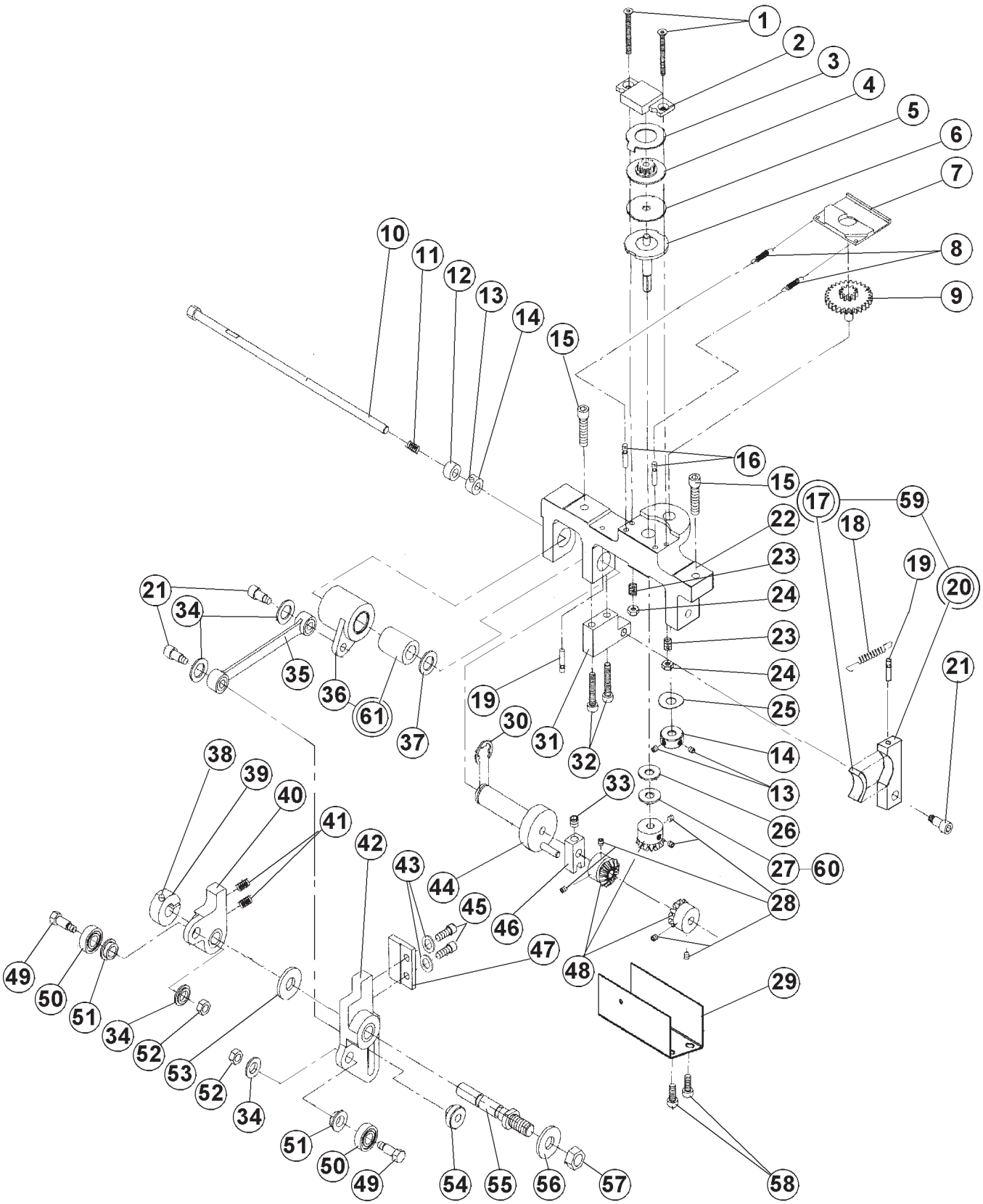

Revised: 06/2022
E-mail: info@amfreece-cars.cz

FEED MECHANISM

DET	PART NUMBER	DESCRIPTION	QTY.
01	08.6100.3.030	M3 x 30 Screw	2
02	22.0114.0.000	Feed Brake Pressure Plate	1
03	22.0121.0.000	Slip Clutch Drive Washer	1
04	22.0354.0.000	Slip Clutch Feed Gear	1
05	24.0126.0.000	Friction Washer ●●●	1
06	22.0312.0.000	Slip Clutch Feed Shaft	1
07	22.0061.0.000	Clamp Plate Gear Rack Retainer	1
08	07.6440.0.033	Spring	2
09	24.0351.0.000	Feed Gear Assembly	1
10	22.0325.0.000	Feed Reversing Shaft	1
11	07.6440.0.041	Spring	1
12	22.0228.0.000	Collar	1
13	08.6400.5.305	M5 x 0,5 - 5 Set Screw	4
14	24.0049.0.000	Set Collar	2
15	08.6000.5.020	M5 x 20 Screw	2
16	07.6045.0.037	3 x 16 Grooved Pin	2
17	22.0313.0.000	Feed Brake Pad ●●●	(1)
18	07.6440.0.050	Spring	1
19	07.6045.0.009	3 x 12mm Pin	2
20	22.0309.0.000	Feed Brake	(1)
21	22.0184.0.000	M5 x 8 Screw	3
22	22.0315.0.000	Feed Shaft Bracket ●●	1
23	07.6440.0.028	Spring	2
24	08.6733.3.000	M3 Lock Nut	2
25	17.0019.2.057	Lockwasher	1
26	22.0208.0.000	Flat Washer	1
27	22.0186.0.000	Washer Dia. 5.2/17-0.2	1
28	08.6400.4.005	M4 x 5 Set Screw	6
29	24.2035.0.000	Gear Cover	1
30	07.6045.0.034	E-Ring	1
31	22.0049.0.000	Feed Brake Mounting Block ●	1
32	08.6000.4.025	M4 x 25 Screw	2
33	08.6400.5.005	M5 x 5 Set Screw	1
34	22.0100.0.000	Shoulder Washer	4
35	22.0305.0.000	Feed Connecting Link ● ●●	1
36	22.0320.0.000	Feed Shaft Bearing Housing	1
37	17.0019.0.517	Washer	1
38	08.6000.3.010	M3 x 10 Screw	1
39	22.0183.0.000	Collar Dia. 8	1
40	22.0026.0.000	L.H. Feed Cam Follower ● ●●	1

FEED MECHANISM

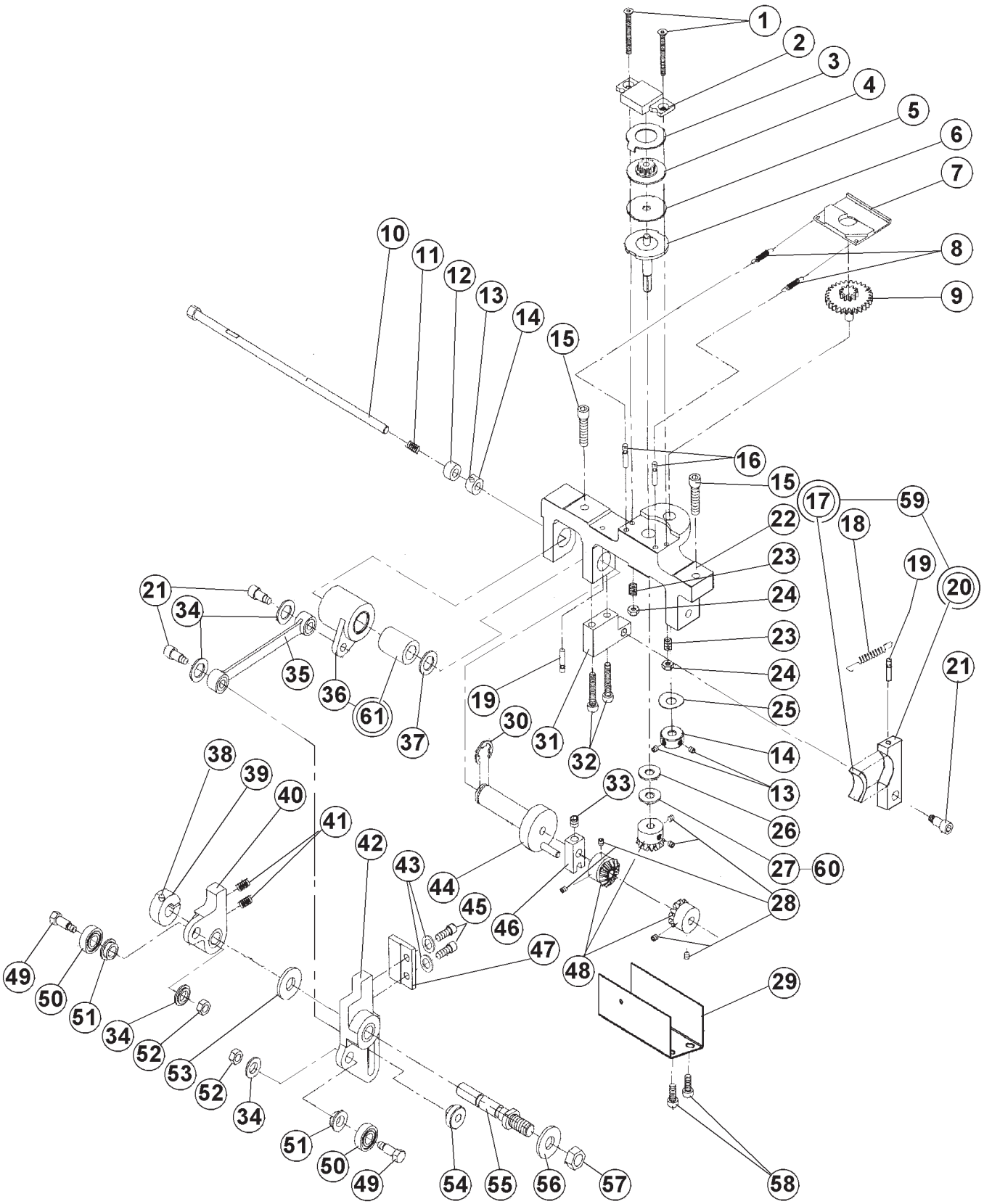

Revised: 06/2022
E-mail: info@amfreece-cars.cz

FEED MECHANISM

DET	PART NUMBER	DESCRIPTION	QTY.
41	07.6440.0.018	Spring	2
42	24.0127.0.000	R.H. Feed Cam Follower ● ●●	1
43	08.6800.4.000	M4 Lockwasher	2
44	22.0336.0.000	Feed Shaft	1
45	08.6000.4.014	M4 x 14 Screw	2
46	22.0370.0.000	Feed Crank	1
47	22.0021.0.000	Spring Retain Block	1
48	22.0353.0.000	Steel Bevel Gear ●	3
49	22.0032.0.000	Bearing Shoulder Screw	2
50	07.6321.0.025	Bearing	2
51	22.0031.0.000	Bearing Spacer	2
52	08.6710.5.000	M5 Nut	2
53	22.0232.0.000	Washer	1
54	22.0110.0.000	M5 Shoulder Nut	1
55	22.0022.0.000	Pivot Shaft	1
56	08.6850.8.000	M8 Flat Washer	1
57	08.6700.8.000	M8 Nut	1
58	08.6000.4.005	M4 x 5 Screw	2
59	22.0309.0.050	Feed Brake Assembly	1
60	24.0140.0.000	Washer Dia. 5.2/17-0.1	1
61	07.6321.0.030	Bearing	(1)

LOOPER MECHANISM

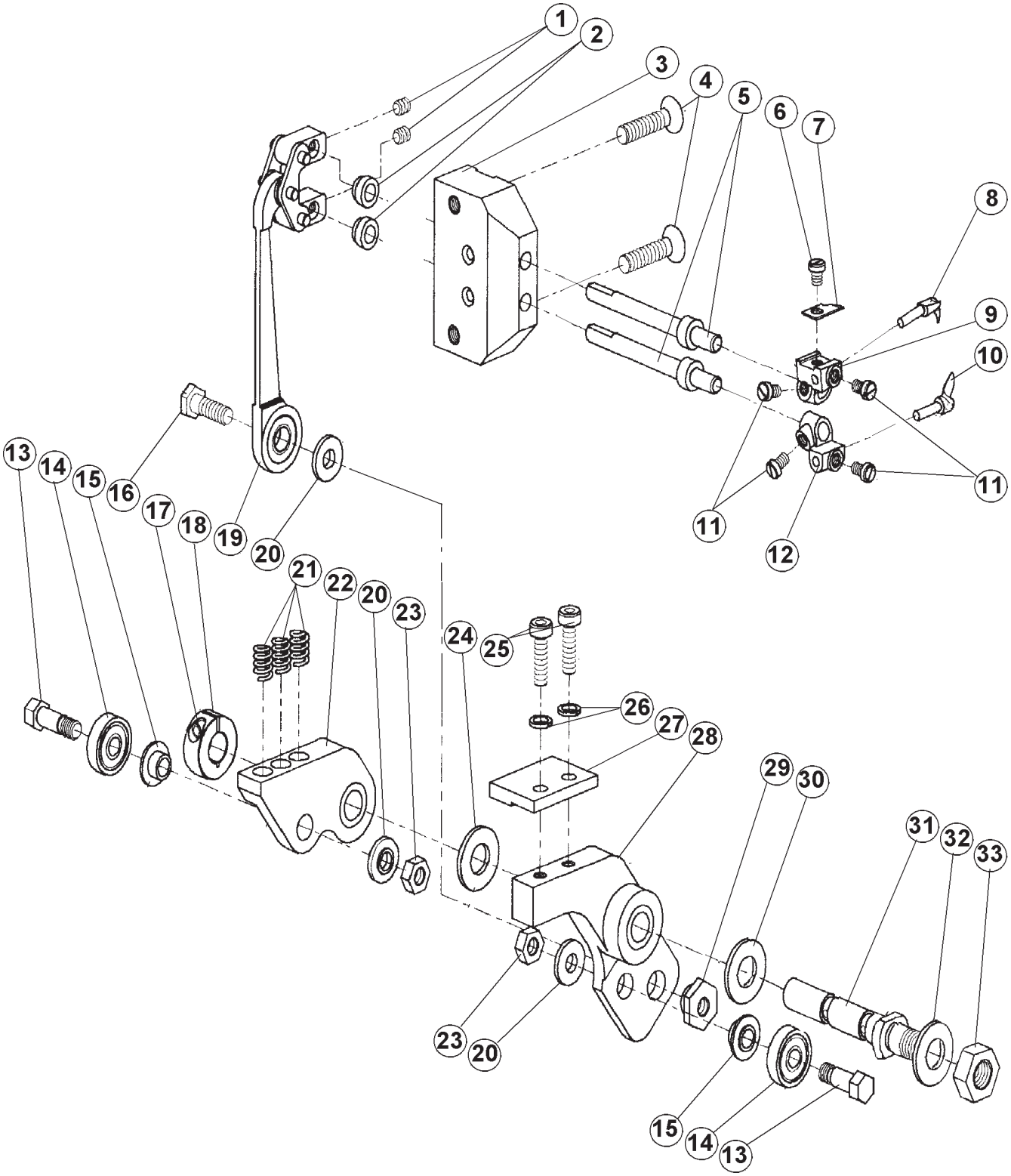

Revised: 06/2022
E-mail: info@amfreece-cars.cz

LOOPER MECHANISM

DET	PART NUMBER	DESCRIPTION	QTY.
01	08.6400.4.004	M4 x 4 Set Screw	2
02	22.2442.0.000	Looper Spacer	2
03	22.2410.0.000	Looper Shaft Block	1
04	08.6100.5.020	M5 x 20 Screw	2
05	22.2440.0.000	Looper Shaft	2
06	01.1382.0.000	Screw	1
07	20.0094.0.000	Trimmer Knife	1
08	20.0111.0.000	First Looper	1
09	23.2106.0.000	First Looper Holder	1
10	20.0112.0.000	Second Looper	1
11	01.1397.0.000	Screw	4
12	23.2107.0.000	Second Looper Holder	1
13	24.0066.0.000	Bearing Screw	2
14	12.2010.1.002	Cam Follower Bearing	2
15	22.0031.0.000	Bearing Spacer	2
16	22.0064.0.000	Bite Shoulder Screw	1
17	08.6000.3.010	M3 x 10 Screw	1
18	22.0183.0.000	Collar	1
19	22.2425.0.050	Looper Link Assembly	1
20	22.0100.0.000	Shoulder Washer	3
21	07.6440.0.036	Spring	3
22	22.0024.0.000	Looper Cam Follower Plate ● ●●	1
23	08.6710.5.000	M5 Hex Nut	2
24	22.0232.0.000	Flat Washer	1
25	08.6000.4.014	M4 x 14 Screw	2
26	08.6800.4.000	M4 Lockwasher	2
27	22.0021.0.000	Spring Retainer Block	1
28	22.0023.0.000	R.H. Looper Cam Follower Plate ● ●●	1
29	22.0105.0.000	Looper Eccentric Nut	1
30	22.0233.0.000	Flat Washer	1
31	22.0022.0.000	Pivot Shaft	1
32	08.6850.8.000	M8 Flat Washer	1
33	08.6700.8.000	M8 Hex Nut	1

BASE

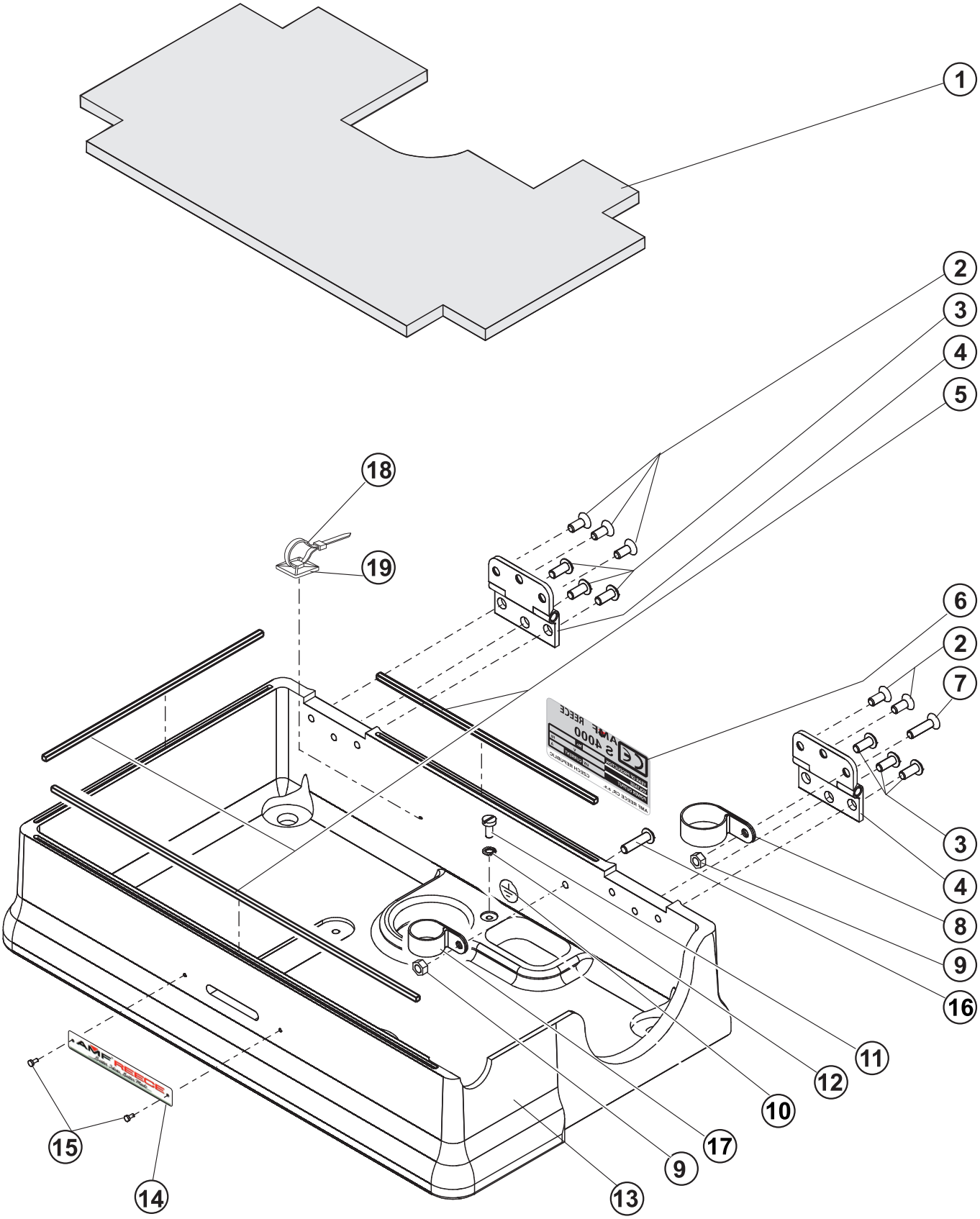

Revised: 06/2022
E-mail: info@amfreece-cars.cz

BASE

DET	PART NUMBER	DESCRIPTION		QTY.
01	24.0111.0.000	Base Sound Deadener	●●●	1
02	08.6100.5.012	M5 x 12 Screw		5
03	08.6200.5.012	M5 x 12 Screw		6
04	22.1010.0.000	Base Hinge		2
05	24.0038.0.000	Base Gasket	●●●	1
06	12.8000.1.028	CE”” Label		1
07	08.6100.5.020	M5 x 20 Screw		1
08	12.0008.4.197	Cord Clamp	●●●	1
09	08.6700.5.000	M5 Nut		2
10	12.0008.4.052	Label (Ground)		1
11	08.6012.4.010	M4 x 10 Screw		1
12	08.6832.4.000	M4 Serrated Lockwasher		1
13	24.6005.1.002	Base		1
14	—	Label	●	1
15	—	Drive Screw	●	2
16	08.6200.5.020	Screw		1
17	12.0010.4.013	Cord Clamp	●●●	1
18	12.0008.3.023	Ty-wrap	●●●	2
19	12.0008.4.058	Clip	●●●	1

BITE MECHANISM

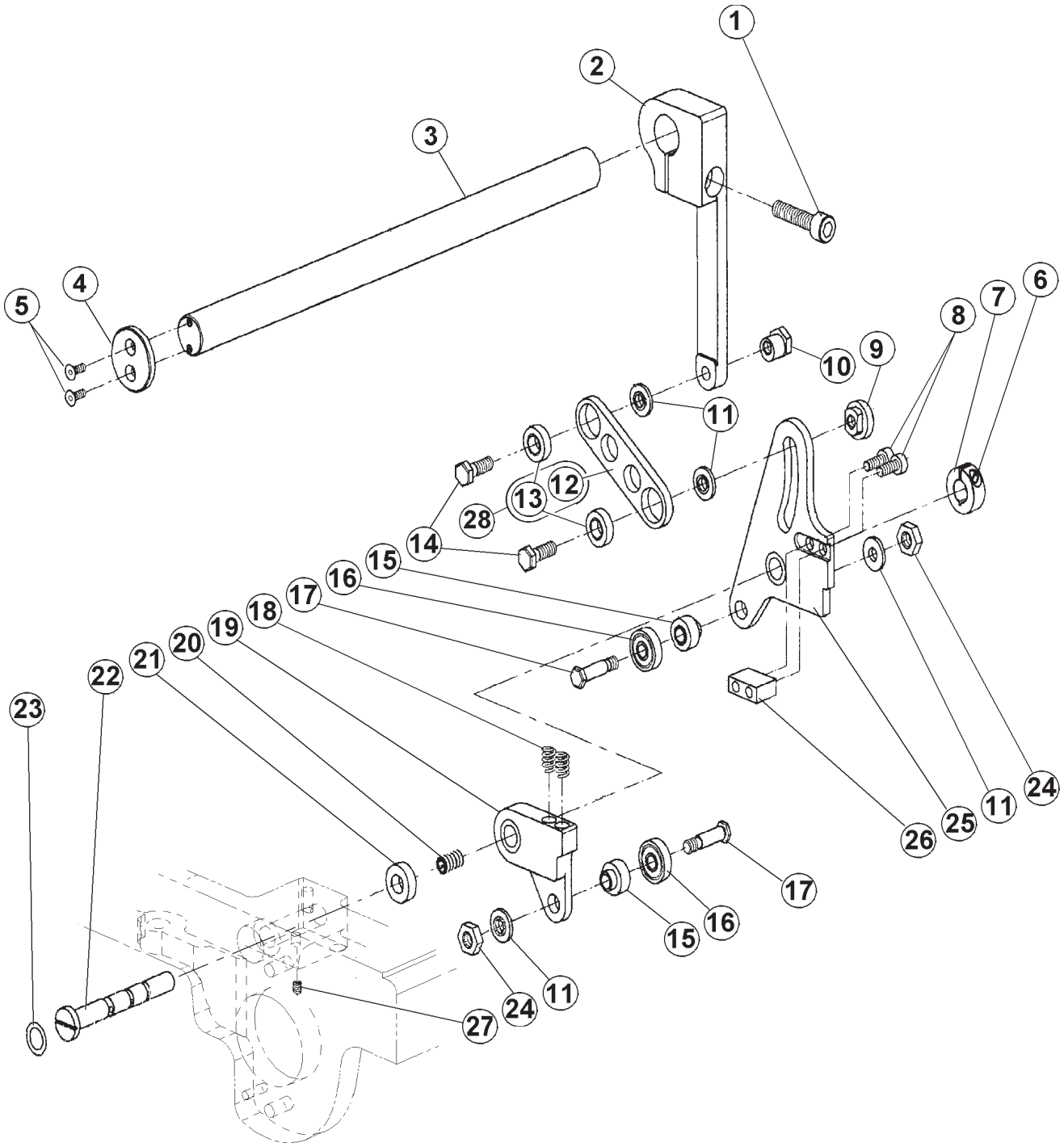

Revised: 06/2022
E-mail: info@amfreece-cars.cz

BITE MECHANISM

DET	PART NUMBER	DESCRIPTION	QTY.
01	08.6000.6.025	M6 x 25 Screw	1
02	22.0008.0.000	Bite Lever ●	1
03	24.0055.0.000	Bite Shaft	1
04	22.0063.0.000	Bite Shaft Retainer	1
05	08.6100.3.008	M3 x 8 FH Screw	2
06	08.6000.3.010	M3 x 10 Screw	1
07	22.0183.0.000	Collar*Dia. 8	1
08	08.6000.4.014	M4 x 14 Screw	2
09	22.0110.0.000	M5 Shoulder Nut	1
10	22.0214.0.000	M5 Eccentric Nut	1
11	22.0100.0.000	Shoulder Washer	4
12	22.0009.0.000	Bite Adjusting Link ●	(1)
13	07.6321.0.029	Bearing	(2)
14	22.0064.0.000	Bite Shoulder Screw	2
15	22.0029.0.000	Bite Follower Bearing Spacer	2
16	07.6321.0.025	Bearing	2
17	22.0028.0.000	Bite Follower Bearing Screw	2
18	07.6440.0.028	Spring	2
19	22.0027.0.000	Right Cam Follower ● ●●	1
20	08.6400.4.005	M4 x 5 Set Screw	1
21	22.0069.0.000	Bite Follower Spacer	1
22	22.0020.0.000	Bite Pivot Shaft	1
23	12.0008.6.800	Rubber Ring ●●●	1
24	08.6700.5.000	M5 Hex Nut	2
25	24.0033.0.000	Left Cam Follower ● ●●	1
26	22.0030.0.000	Bite Follower Spring Retainer	1
27	08.6400.4.004	M4x4 Screw	1
28	22.0009.0.050	Bite Adjusting Link Assembly	1

KNIFE AND DRAW

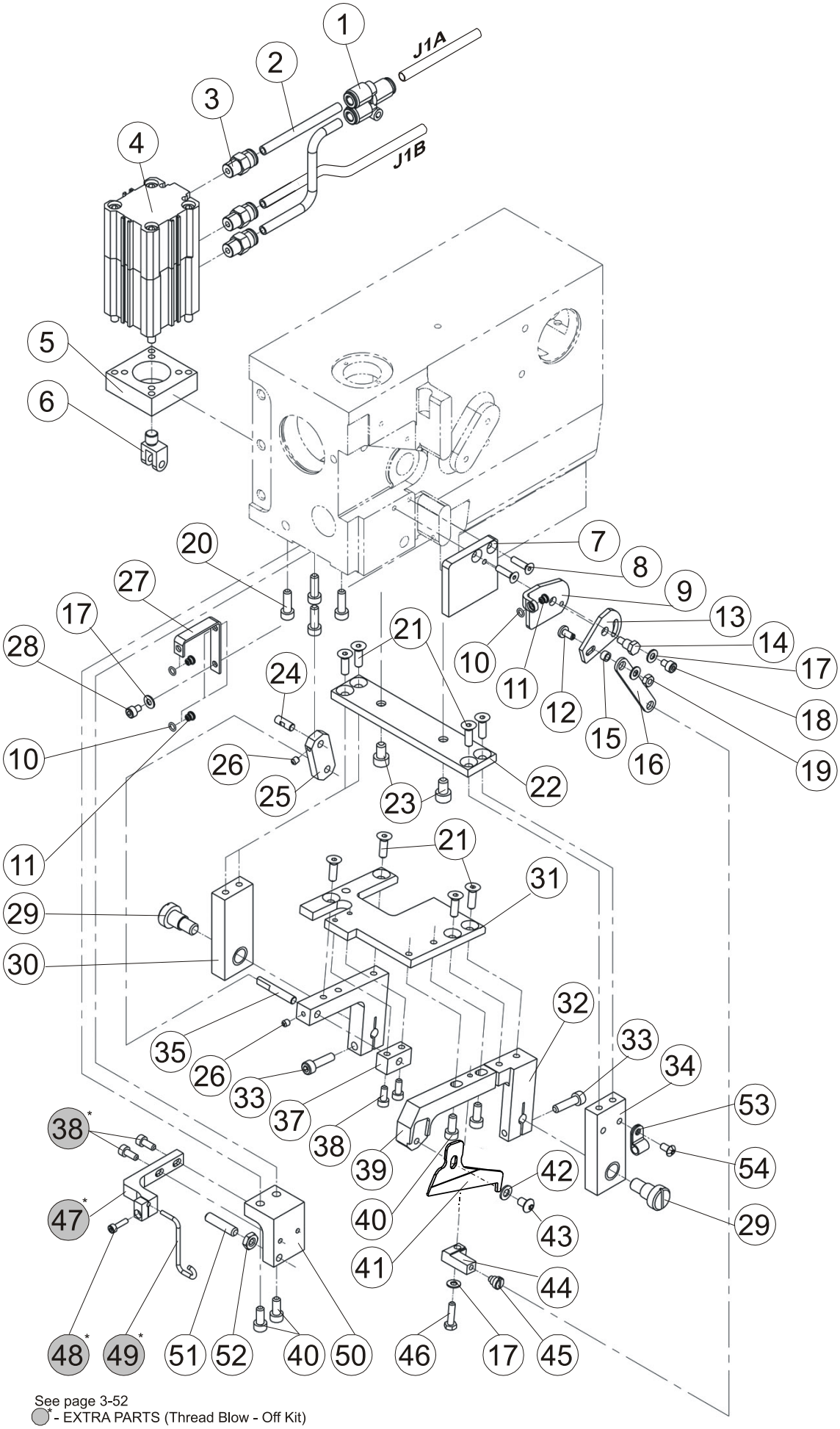

See page 3-52

* - EXTRA PARTS (Thread Blow - Off Kit)

Revised: 06/2022

E-mail: info@amfreece-cars.cz

KNIFE AND DRAW

DET	PART NUMBER	DESCRIPTION		QTY.
1	See page 3-46	Connector	●●●	-
2	See page 3-46	Air Tubing	●●●	-
3	See page 3-46	Connector	●●●	-
4	See page 3-46	Cylinder	●	-
5	24.2069.0.000	Cylinder Stand-Off		1
6	24.2014.0.000	Knife Drive Lever		1
7	24.2053.0.000	Thread Take-Up Plate		1
8	08.6102.4.014	M4x14 Screw		2
9	24.2042.0.000	Thread Take-Up		1
10	01.6551.0.000	Retaining Ring	●●●	3
11	01.7447.1.000	Guide	●●●	3
12	24.2044.0.000	Screw-Thread Draw-Off Link		1
13	24.2043.0.000	Thread Draw-Off		1
14	24.2047.0.000	Pivot,Draw-Off		1
15	24.2045.0.000	Bearing		1
16	24.2046.0.000	Thread Draw-Off Lever		1
17	08.6852.4.000	Washer M4		4
18	08.6002.4.006	M4x6 Screw		1
19	08.6702.4.000	Nut M4		1
20	08.6000.5.016	M5x16 Screw		4
21	08.6102.5.016	M5x16 Screw		8
22	24.2001.0.000	Base Plate		1
23	08.6000.6.010	M6x10 Screw		2
24	24.2015.0.000	Clevis Pin		1
25	24.2013.0.000	Clevis Link		1
26	08.6400.4.004	M4x4 Set Screw		2
27	24.2048.0.000	Thread Guide Bracket		1
28	08.6002.4.005	M4x5 Screw		1
29	24.2004.0.000	Adjusting Screw		2
30	24.2002.0.000	Plate Leg,Right Assy.	●●	1
31	24.2005.0.000	Bridge Plate		1
32	24.2007.0.000	Knife Pivot Leg		1
33	08.6002.5.020	M5x20 Screw		2
34	24.2028.0.000	Plate Leg,Right Assy.	●●	1
35	24.2009.0.000	Knife Link Pin		1
36	24.2006.0.000	Bridge Support		1
37	24.2008.0.000	Clevis Link Support		1
38*	08.6002.4.010	M4x10 Screw		4
39	24.2010.1.000	Knife Lever		1
40	08.6002.5.012	M5x12 Screw		4

* - EXTRA PARTS

KNIFE AND DRAW

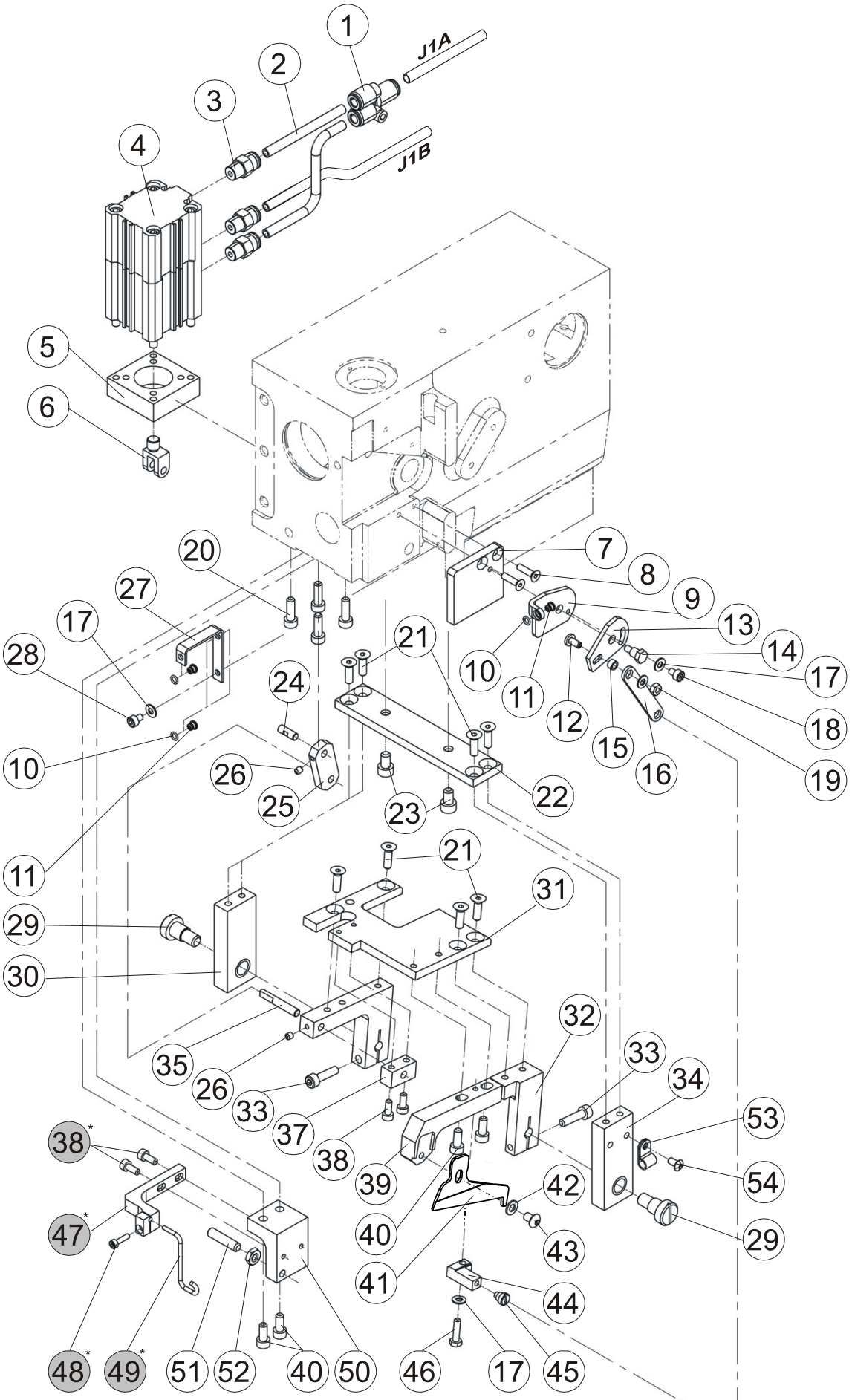

See page 3-52

* - EXTRA PARTS (Thread Blow - Off Kit)

KNIFE AND DRAW

DET	PART NUMBER	DESCRIPTION	QTY.
41	24.2071.3.000	Knife	1
42	08.6852.5.000	Washer M5	1
43	08.6202.5.006	M5x6 Screw	1
44	24.2049.0.000	Thread Take-Up Link Holder	1
45	24.2012.0.000	Thread Draw-Off Shoulder Screw	1
46	08.6312.4.014	M4x14 Screw	1
47*	24.2068.0.000	Bracket	1
48*	08.6002.3.012	M3x12 Screw	1
49*	24.2067.0.000	Thread Holder	1
50	24.2050.0.000	Cutting Lever Block	1
51	08.6490.6.025	M6x25 Screw	1
52	08.6712.6.000	Nut M6	1
53	12.0008.4.280	Clamp ●●●	1
54	08.6202.4.008	M4x8 Screw	1

* - EXTRA PARTS

MAIN CAM

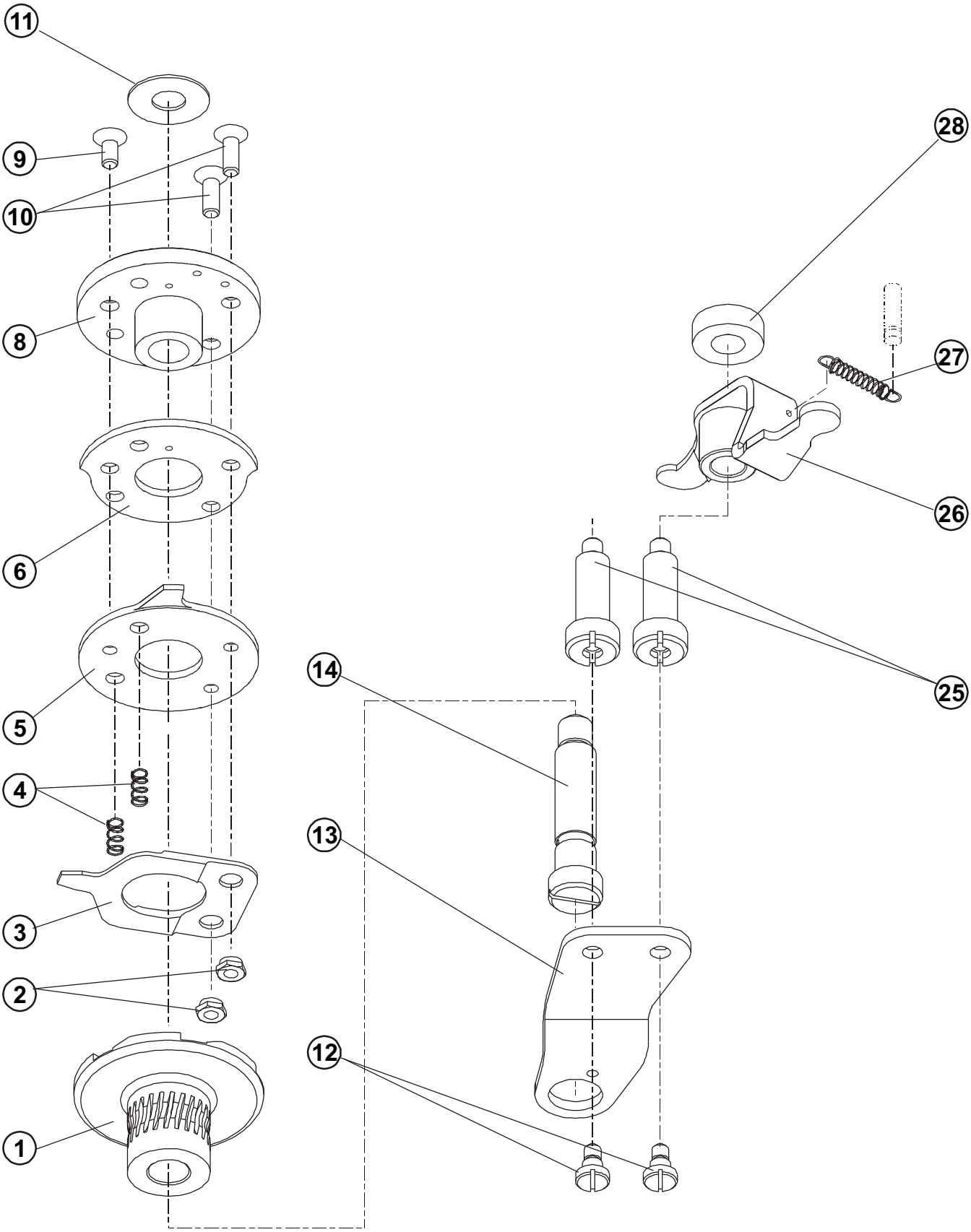

MAIN CAM

DET	PART NUMBER	DESCRIPTION	QTY.
01	22.2607.0.000	Drive Disk/Worm Gear Hub	1
02	22.2627.0.000	Shoulder Nut	2
03	22.2626.0.000	Drive Disk Switch Spring	1
04	07.6440.0.037	Spring	2
05	24.2040.0.000	Stop Disk	1
06	24.3201.0.000	Feed Reversing Cam	1
08	24.3203.0.000	Barring Cam	1
09	08.6100.5.010	M5 x 10 Screw	1
10	22.0137.0.000	M5 x 14 Screw	2
11	07.6321.0.001	Thrust Washer	1
12	22.0182.0.000	M5 x 4 Screw	2
13	22.0097.0.000	Main Cam Brace	1
25	22.0106.0.000	Hub Shoulder Screw	2
26	24.2640.2.000	Feed Reversing Lever	1
27	07.6440.0.045	Extension Spring	1
28	22.3003.0.000	Spacer	1

HEAD ASSEMBLY

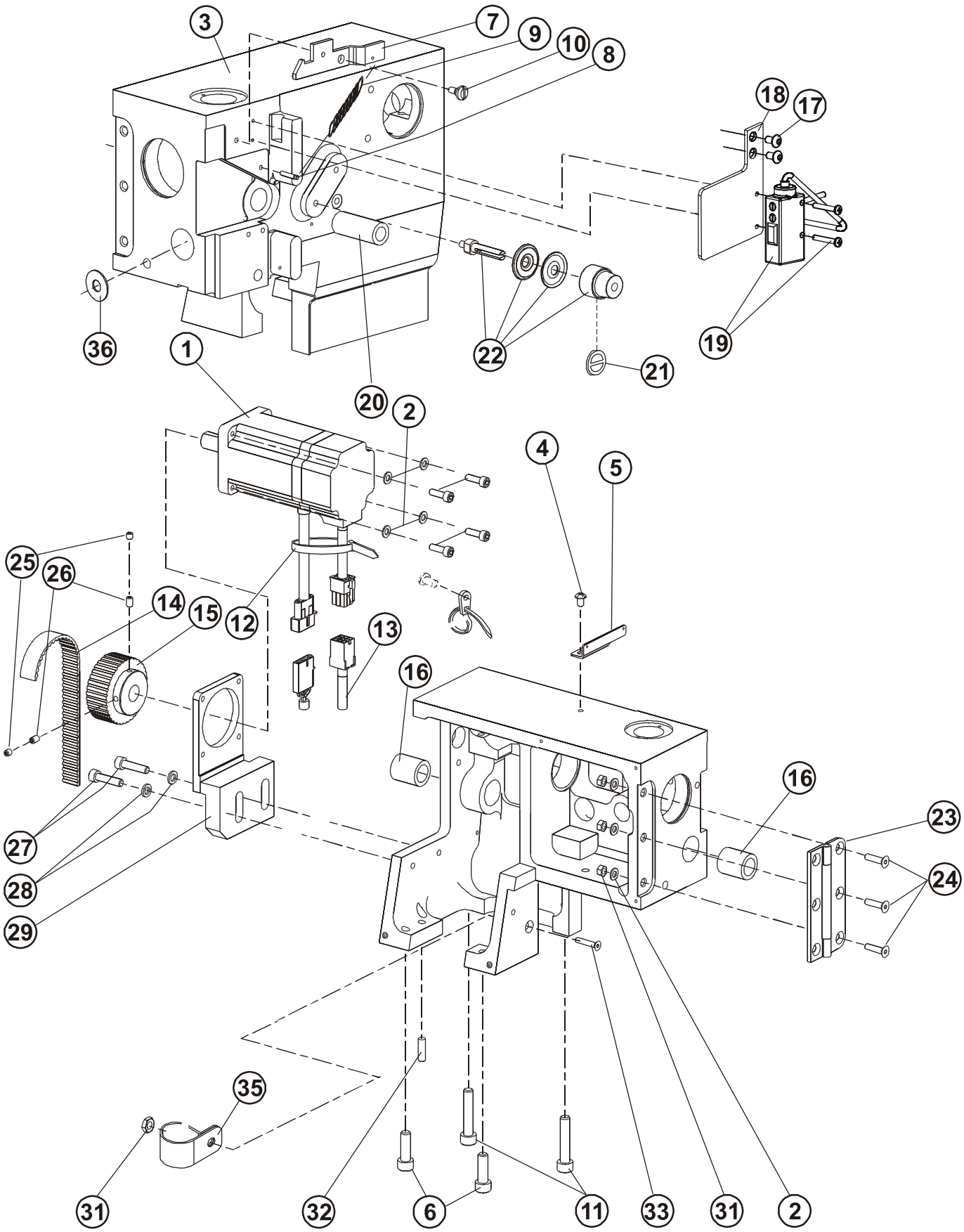

Revised: 06/2022
E-mail: info@amfreece-cars.cz

HEAD ASSEMBLY

DET	PART NUMBER	DESCRIPTION	QTY.
01	See Page 3-38	Servomotor ● ●● ●●●	1
02	08.6850.5.000	M5 Washer	7
03	24.6000.6.000	Head	1
04	08.6200.5.008	M5 x 8 Screw	1
05	22.0054.0.000	Upper Thread Guide	1
06	08.6000.8.025	M8 x 25 Screw	2
07	22.0058.0.000	Sewing Head Latch	1
08	07.6045.0.037	3 x 16 Grooved Pin	1
09	07.6440.0.051	Latch Tension Spring	1
10	22.0062.0.000	M4 x 3 Screw	1
11	08.6000.8.040	M8x40 Screw	2
12	12.0008.3.023	Ty-wrap ●●●	1
13	See Page 3-38	Encoder Cable ●● ●●●	1
14	12.5050.2.009	Belt ●●●	1
15	24.0108.0.000	Motor Pulley ●	1
16	01.7806.0.000	Oilite Bushing ●●	2
17	08.6200.4.008	M4x8 Screw	2
18	24.2070.0.000	Optical Senzor Bracket	1
19	24.0069.9.020	Senzor BQ3 Assy ●● ●●●	1
20	22.1422.0.000	Knife Shaft Bushing	1
21	17.0082.8.082	Release Washer	1
22	24.0119.0.050	Large Tension Assembly ●●●	1
23	22.6002.0.000	Head Hinge Assembly	1
24	08.6100.5.020	M5 x 20 Screw	3
25	08.6400.5.005	M5 x 5 Set Screw	2
26	08.6400.5.008	M5x8 Set Screw	2
27	08.6000.6.025	M6 x 25 Screw	2
28	08.6850.6.000	M6 Washer	2
29	24.0106.1.000	Motor Bracket	1
31	08.6700.5.000	Nut M5	4
32	12.1011.0.001	Pin 6 x 20	1
33	08.6100.5.020	Screw M5 x 20	1
35	12.0008.4.197	Clamp ●●●	1
36	01.4980.0.000	Bearing AS 0821	1

BEDPLATE

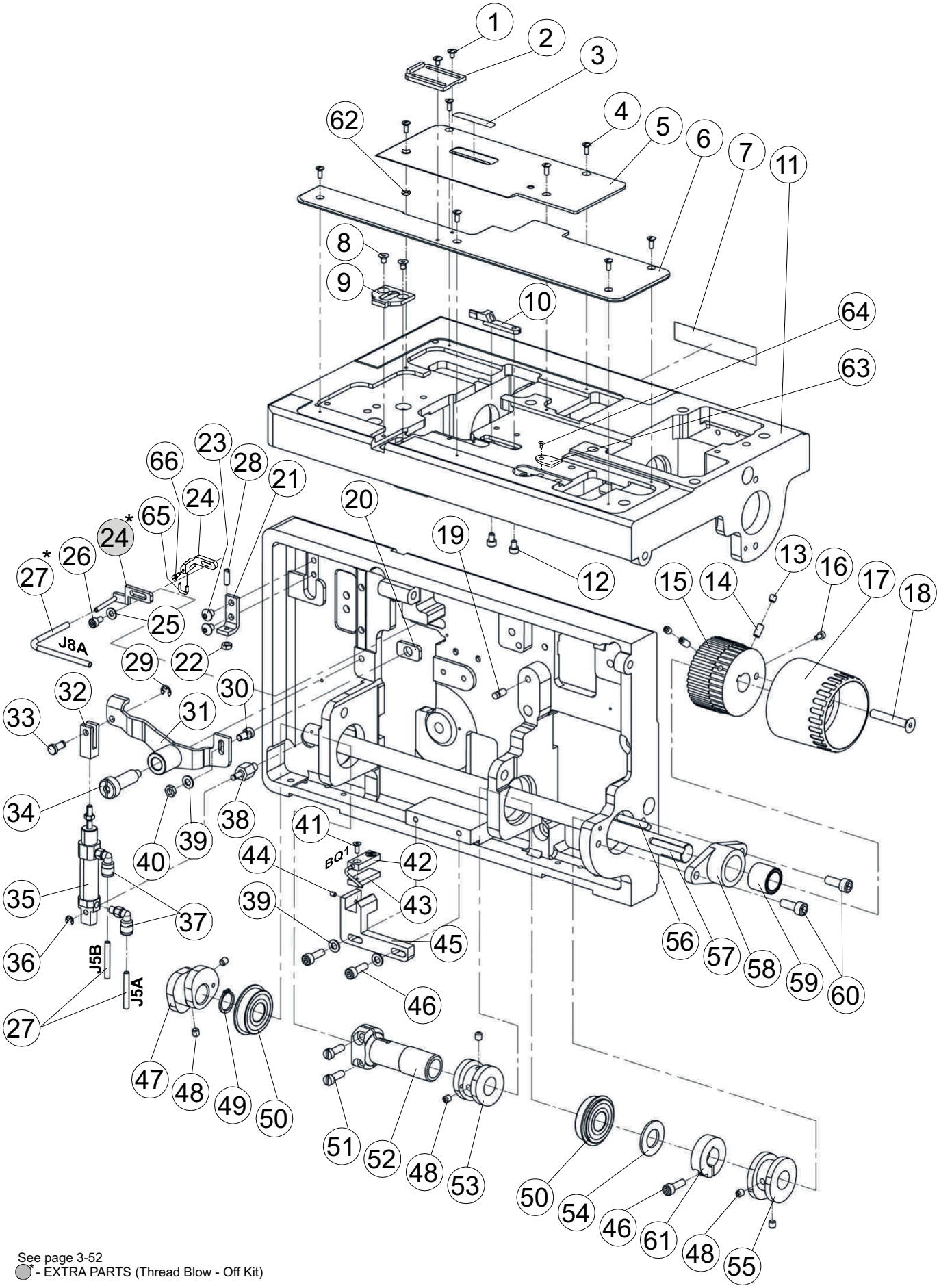

See page 3-52
* - EXTRA PARTS (Thread Blow - Off Kit)

BEDPLATE

DET	PART NUMBER	DESCRIPTION	QTY.
1	22.3068.0.000	Screw	2
2	24.2032.0.000	Material Guide	1
3	12.8000.0.103	Buttonhole Size Sticker	1
4	08.6120.3.008	M3x8 Screw	8
5	24.6102.4.002	Cover Plate Right	1
6	24.6102.4.001	Cover Plate Left	1
7	-	AMF REECE Label - small	1
8	08.6100.4.006	M4x6 Screw	2
9	22.0408.0.000	Trimmer Cover Plate	1
10	24.2066.0.000	Knife Support Block	1
11	24.6100.4.000	Bedplate CAED	1
12	08.6000.4.005	M4x5 Screw	2
13	08.6400.5.005	M5x5 Set Screw	2
14	08.6400.5.010	M5x10 Set Screw	2
15	24.0018.0.000	Main Shaft Drive Pulley ●	1
16	08.6000.3.006	M3x6 Screw	1
17	24.0051.0.066	Hand Wheel	1
18	08.6100.6.035	M6x35 Screw	1
19	07.6045.0.054	5x20 Pin	1
20	22.2631.0.000	Clamp Plate Slidestone	1
21	24.2025.0.000	Slidestone Pivot Screw Bracket	1
22	08.6700.4.000	M4 Nut	1
23	08.6200.5.006	M5x6 Screw	2
24*	24.3318.0.000	Blow-Off Assy.	1
24	23.2113.0.000	Needle Guard Bracket	1
25	08.6850.4.000	M4 Washer	1
26	08.6000.4.005	M4x5 Screw	1
27*	See page 3-52	Air Tubing ●●●	-
28	08.6400.4.012	M4x12 Screw	1
29	07.6045.0.042	E-clip	1
30	22.2633.0.000	Slidestone Retainig Screw	1
31	24.2018.0.000	Slidestone Pivot Bracket	1
32	24.2019.0.000	Cylinder Clevis	1
33	24.2020.0.000	Cylinder Clevis Pin	1
34	22.0106.0.000	Hub Shoulder Screw	1
35	See page 3-46	Cylinder ●	-
36	07.6045.0.047	E-clip	1
37	See page 3-46	Connector ●●●	-
38	24.2017.0.000	Air Cylinder Mounting post	1
39	08.6850.5.000	M5 Flat Washer	3
40	08.6700.5.000	M5 Nut	1

* - EXTRA PARTS (Thread Blow - Off Kit)

BEDPLATE

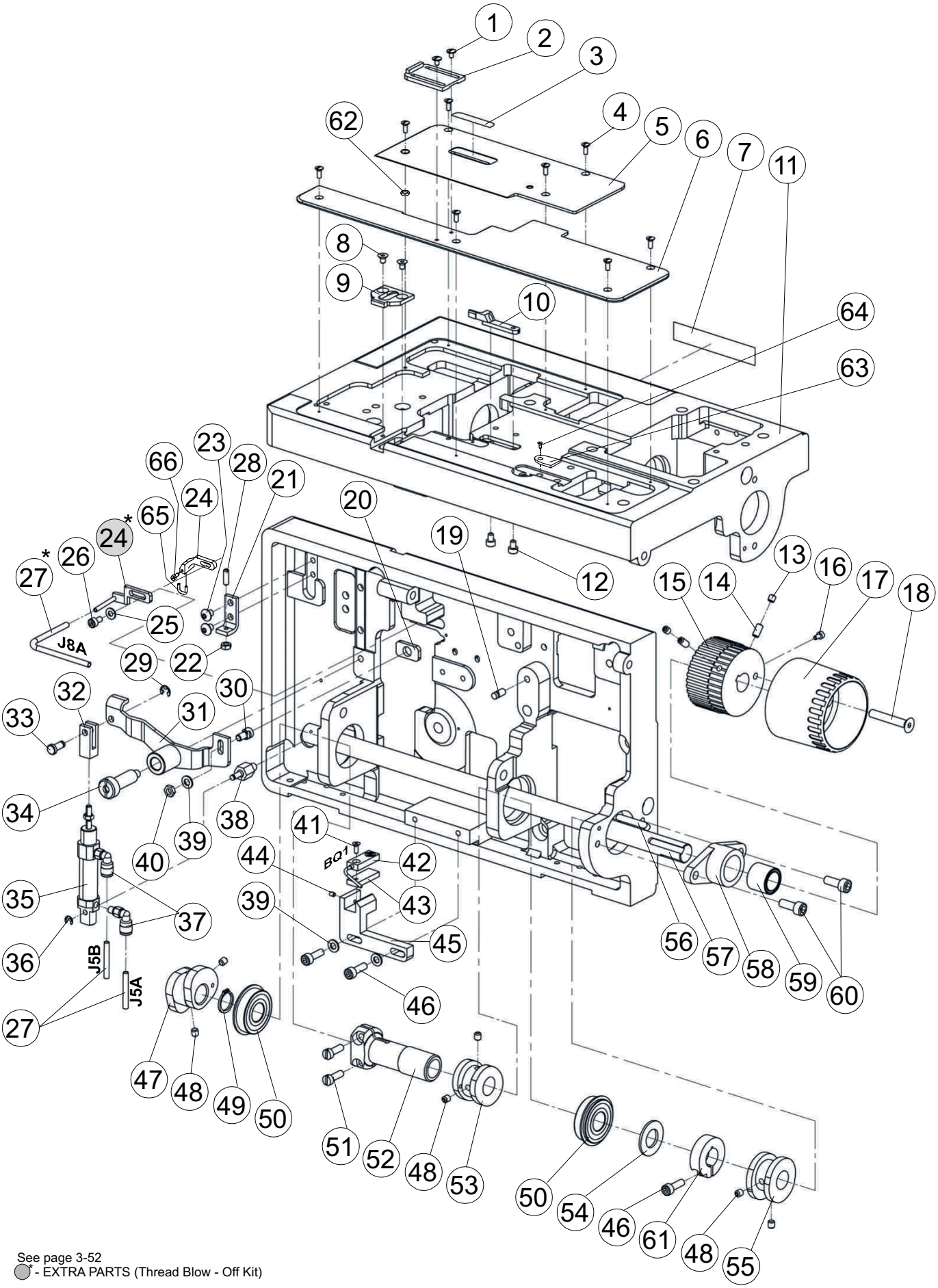

See page 3-52
* - EXTRA PARTS (Thread Blow - Off Kit)

BEDPLATE

DET	PART NUMBER	DESCRIPTION	QTY.
41	08.6100.3.008	M3x8 Screw	1
42	See page 3-38	*Senzor EOC ●● ●●●	-
43	24.0027.0.000	Sensor Mounting Plate	1
44	08.6400.3.004	M3x4 Set Screw	1
45	24.0020.0.000	End Of Cycle Sensor Bracket	1
46	08.6000.5.016	M5x16 Screw	3
47	24.2400.0.000	Looper Cam	1
48	08.6400.5.305	M5x0.5-5 Set Screw	6
49	12.1045.2.001	Retaining Ring	1
50	01.7805.0.000	Shaft Bearing	2
51	22.0153.0.000	Screw	2
52	22.8400.0.000	Shaft Worm Gear	1
53	22.0300.0.000	Feed Cam	1
54	22.0545.0.000	Washer	1
55	24.0006.0.000	Bite Cam	1
56	12.4030.0.002	Key 5x5x30	1
57	24.1000.0.000	Main Shaft	1
58	24.0019.0.000	Bearing Carrier Lower Shaft	1
59	12.2050.0.005	Bearing	1
60	08.6000.6.016	M6x16 Screw	2
61	24.0002.0.000	Clamp Collar	1
62	17.0019.0.228	Washer	1
63	24.2065.0.000	Stop	1
64	22.0143.0.000	Screw	1
65	23.2114.0.000	Needle Guard	1
66	04100031	Screw	1

* - EXTRA PARTS (Thread Blow - Off Kit)

COVERS

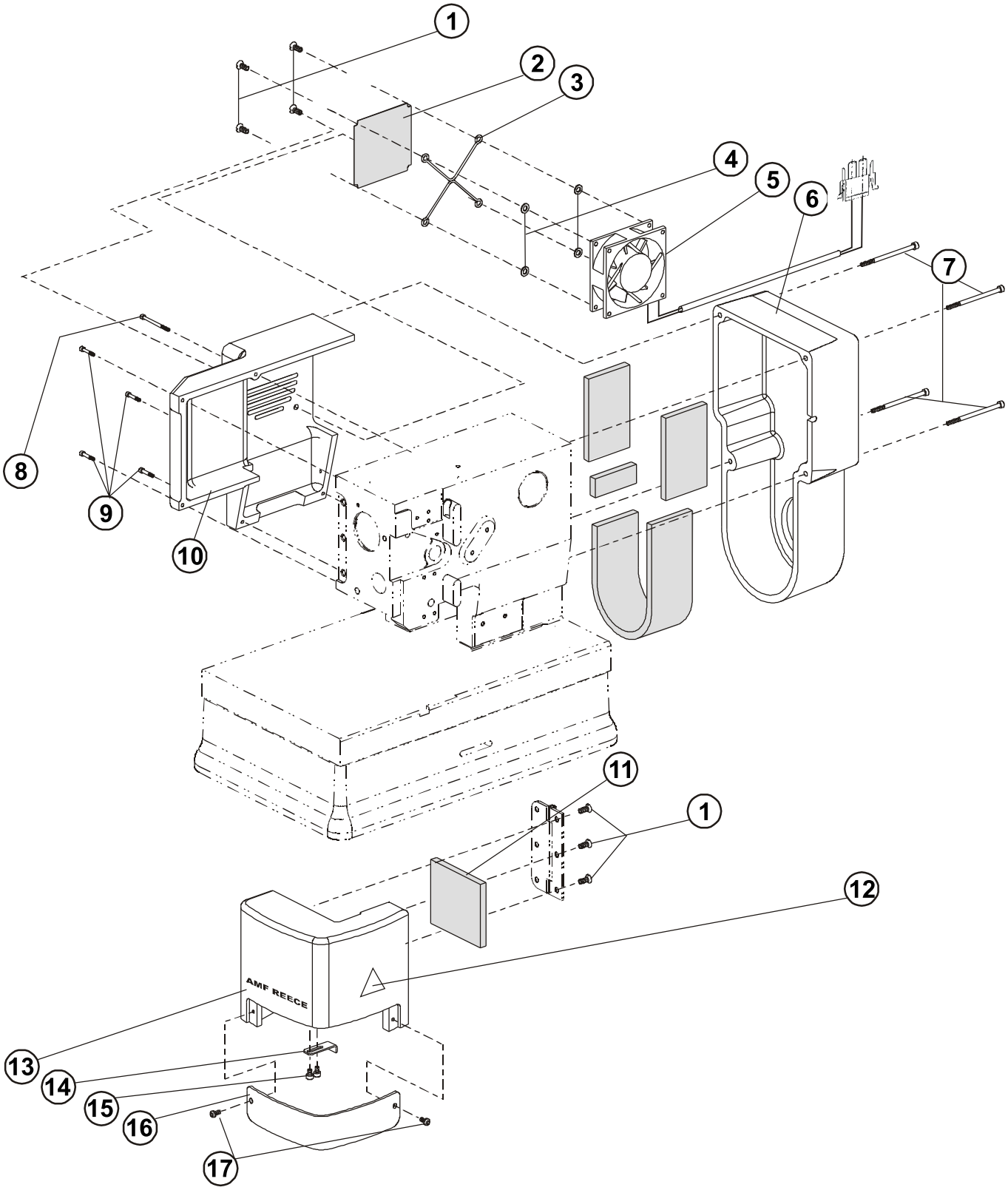

Revised: 06/2022
E-mail: info@amfreece-cars.cz

COVERS

DET	PART NUMBER	DESCRIPTION	QTY.
01	08.6100.5.016	Screw M5 x 16	7
02	24.0068.0.000	Net ●●●	1
03	24.0067.0.000	Fan Rack	1
04	08.6850.5.000	Washer M5	4
05	See Page 3-38	Fan Assembly ●● ●●●	—
06	24.6004.7.00	Pulley Cover ●	1
07	08.6000.4.070	Screw M4 x 70	4
08	08.6000.3.040	Screw M3 x 40	1
09	08.6000.3.016	Screw M3 x 16	4
10	24.6001.7.000	Head Rear Cover ●	1
11	24.0112.0.000	Cover Sound Deadener ●●●	1
12	—	Label	1
13	24.6003.0.000	Needle Bar Cover ●	1
14	22.0057.0.000	Cover Latch	1
15	08.6000.4.006	Screw M4 x 6	2
16	24.0154.0.000	Eye Shield ●●●	1
17	08.6200.4.008	Screw M4 x 8	2

LUBRICATION

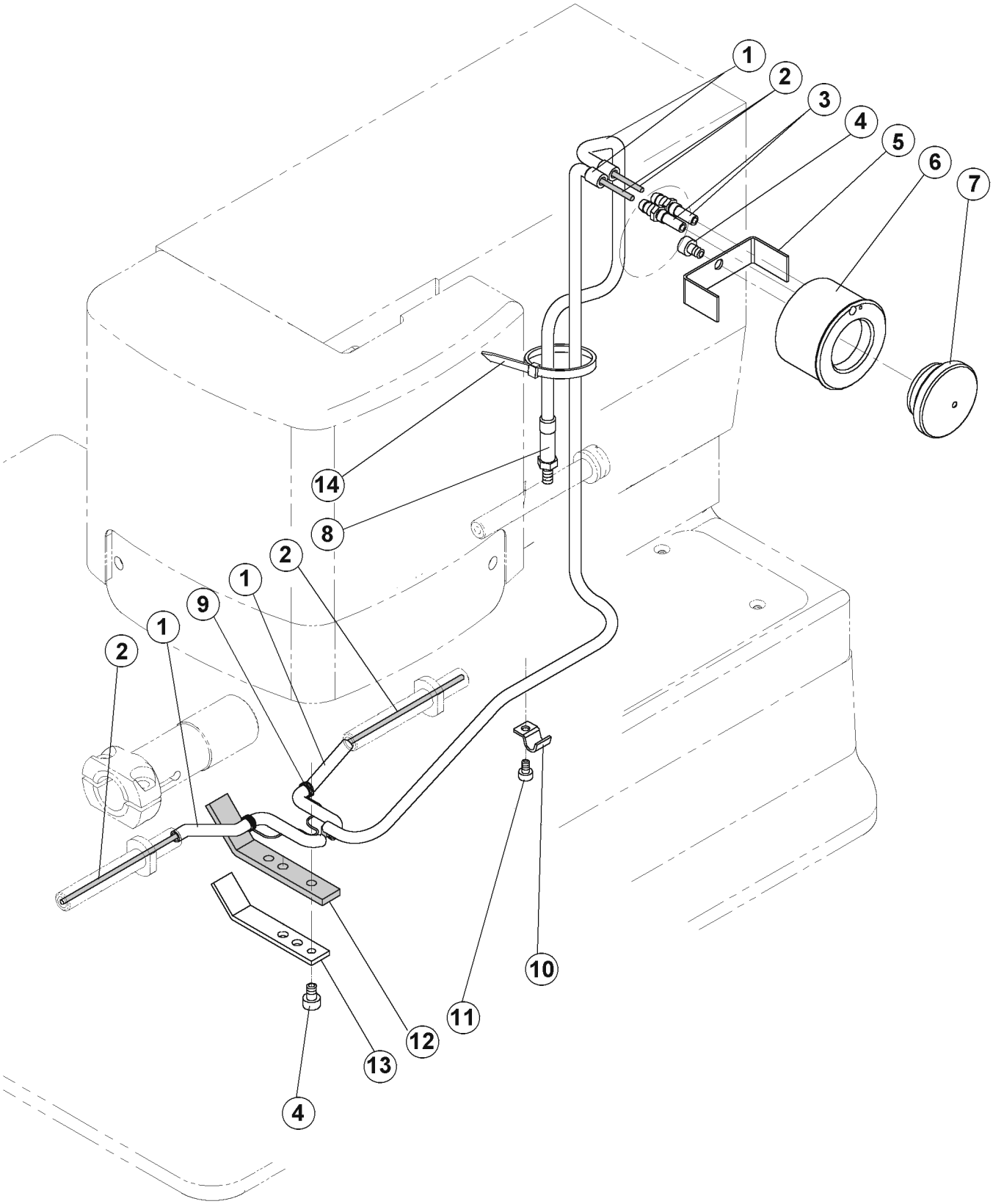

LUBRICATION

DET	PART NUMBER	DESCRIPTION		QTY.
01	24.0141.0.000	Tubing	●●●	1
02	24.0139.0.000	Lubricating Wick	●●●	1
03	22.0229.0.000	Straight Fitting		2
04	08.6000.4.006	M4 x 6 Screw		2
05	22.0120.0.000	Holder		1
06	22.0104.0.000	Oil Gauge Reservoir		1
07	17.0095.1.329	Wheel	●●●	1
08	22.0108.0.000	Wick Holder		1
09	17.0027.1.799	Spring		1
10	17.0082.6.000	Clamp		1
11	08.6000.3.006	M3 x 6 Screw		1
12	17.0094.5.310	Felt	●●●	1
13	22.0107.0.000	Worm Gear Felt Retainer		1
14	12.0008.3.023	Ty-wrap	●●●	1

TABLE

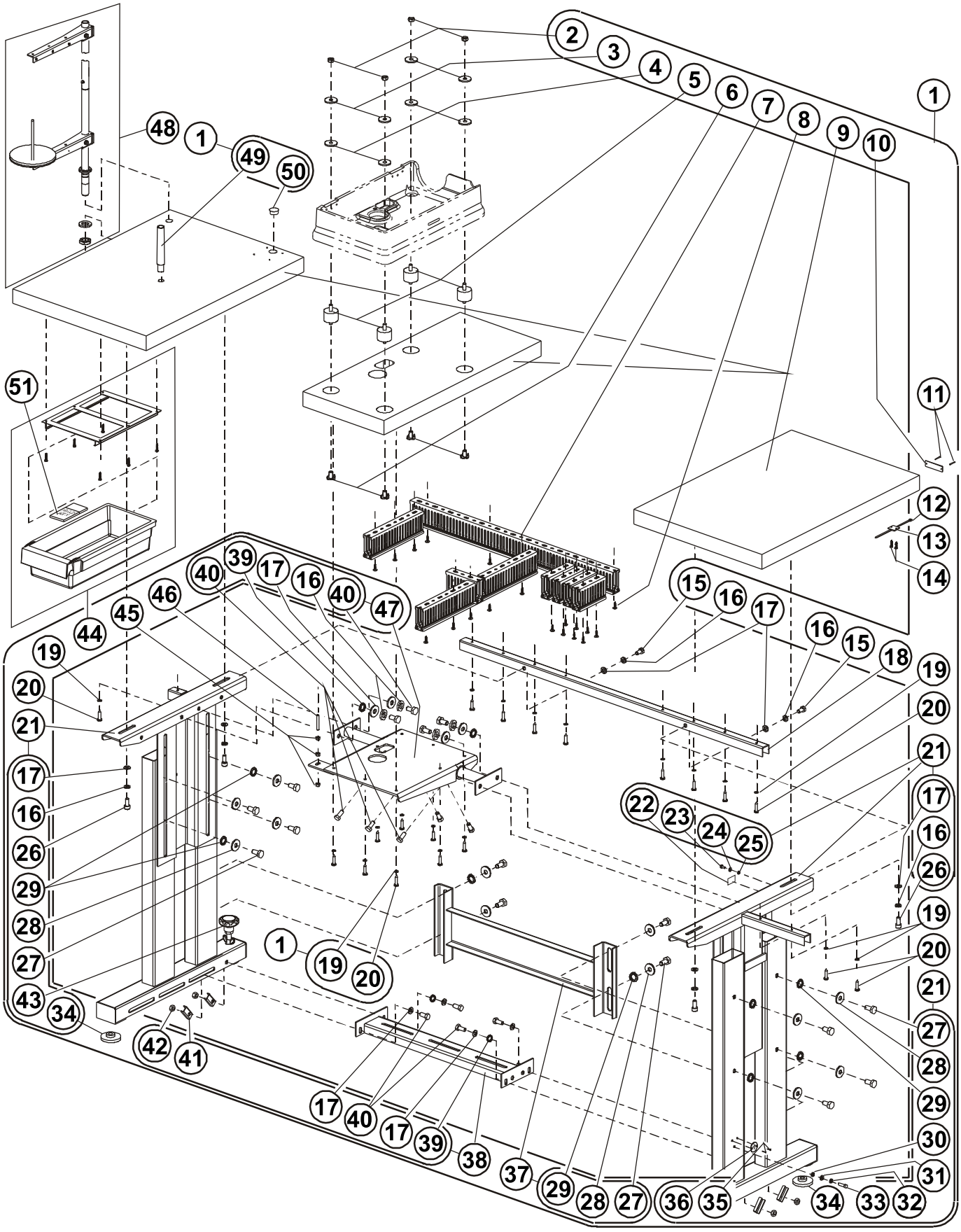

Revised: 06/2022
E-mail: info@amfreece-cars.cz

TABLE

DET	PART NUMBER	DESCRIPTION	QTY.
01	04.9024.0.002	Frame Assembly	1
02	08.6700.8.000	Nut M8	(8)
03	17.0019.0.441	Washer	(4)
04	17.0095.1.272	Rubber Washer ●●●	(4)
05	12.0008.6.801	Rubber Spring	(4)
06	12.0008.4.777	Plug	(1)
08	08.6676.3.020	Screw 3,5x20	(21)
09	04.9024.0.903	Table ●●●	(1)
10	04.1416.0.003	Label “No.xxxx”	(1)
11	12.1016.1.000	Nail	(2)
12	12.0008.3.023	Ty-wrap ●●●	(1)
13	12.0008.4.058	Clip	(1)
14	08.6652.3.016	Screw 3x16	(2)
15			
16	08.6802.8.000	Spring Washer	(4)+(4)
17	08.6852.8.000	Washer	(4)+(4)+((4)
19	08.6852.5.000	Washer M5	(11)
20	08.6663.5.025	Screw 4,8x25	(11)
21	04.9024.0.002	Frame Assembly	(1)
22	12.0008.4.052	Label	((1))
23	08.6012.4.010	Screw M4x10	((1))
24	08.6852.4.000	Washer 4,3	((1))
25	08.6832.4.000	Lock Washer M4	((1))
26	08.6312.8.025	Screw M8x25	((4))
07	24.0069.9.040	Latch For Kit ●●●	(1)
27	08.6312.0.020	Screw M10x20	((12))
18	04.9024.0.361	Reinfrcement Crossbar	(1)
28	08.6882.0.000	Washer M10	((12))
29	08.6832.0.000	Washer 10,5	((8+2+2))
30	08.6832.6.000	Lock Washer M6	((1))
31	08.6852.6.000	Washer 6,4	((1))
32	08.6802.6.000	Spring Washer	((1))
33	08.6312.6.020	Screw M6x20	((1))
34	12.0008.6.813	Rubber Washer ●●●	((3))
35	12.1016.0.000	Drive Screw	((2))
36	17.0081.6.225	Label	((1))
37	04.9000.0.225	Crossbar Rear	(1)
38	04.9000.0.125	Crossbar Down	(1)
39	08.6832.8.000	Lock Washer M8	((2)+(2))
40	08.6312.8.020	Screw	((4)+(4)+4)
41	12.0008.6.964	Washer - U	((4))
42	08.6702.8.000	Nut M8	(4)
43	12.0008.6.965	Yielding Support	(1)
44	12.0008.6.901	Drawer Kit ●●●	(1)
45	08.6700.6.000	Nut M6	(3)
46	08.6700.6.000	Screw M6x40	(1)
47	04.9000.0.325	Crossbar Up Assembly	((1))
48	22.0219.0.000	Thread Stand	1

TABLE - ROLLER KIT - EXTRA PARTS

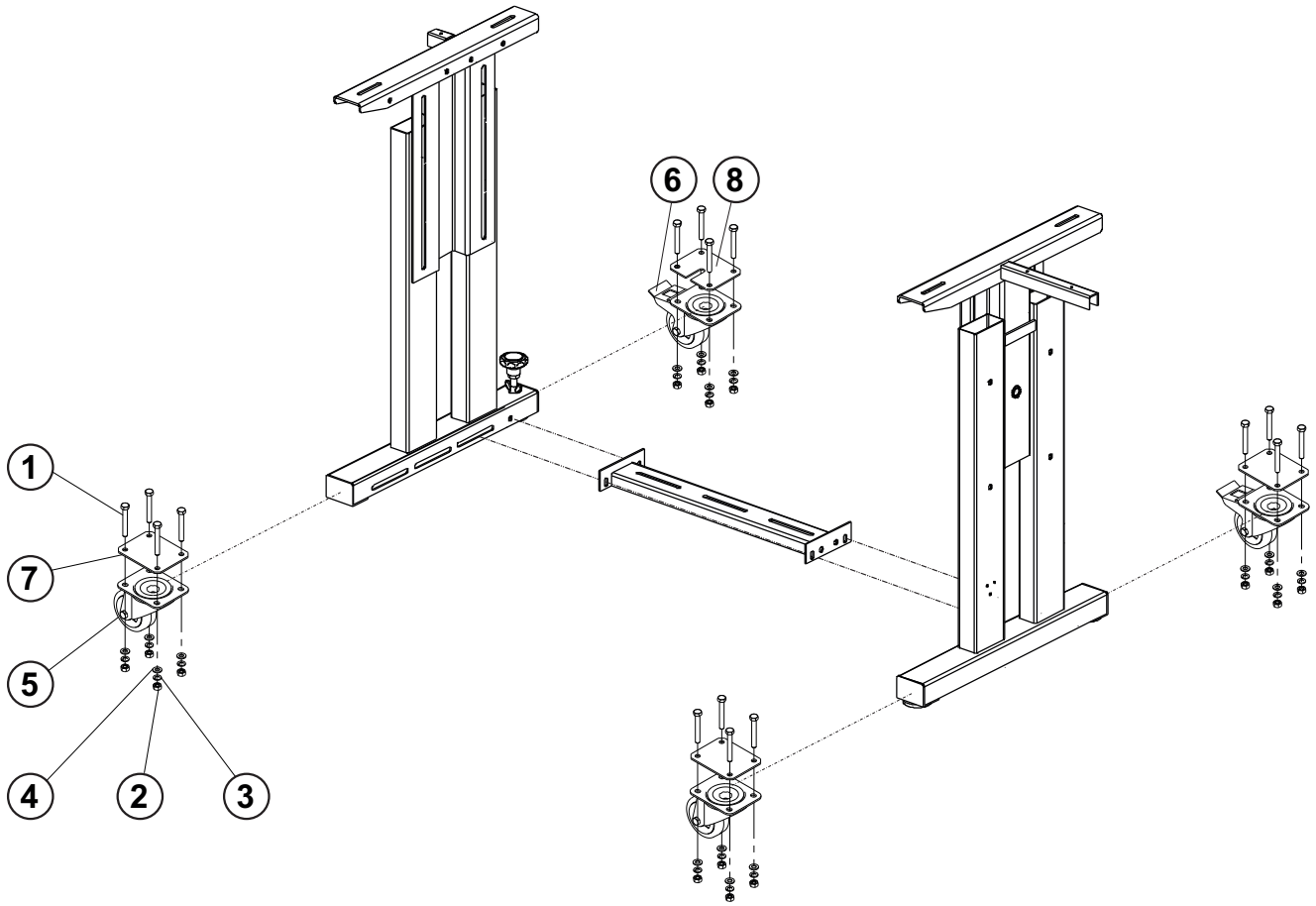

Revised: 06/2022
E-mail: info@amfreece-cars.cz

TABLE - ROLLER KIT - EXTRA PARTS

DET	PART NUMBER	DESCRIPTION	QTY.
01	08.6312.8.060	SCREW M8-60	16
02	08.6702.8.000	NUT M8	16
03	08.6802.8.000	SPRING WASHER M8	16
04	08.6852.8.000	WASHER M8	16
05	12.0008.6.527	ROLLER	2
06	12.0008.6.528	ROLLER WITH BRAKE	2
07	24.0170.0.000	PLATE	3
08	24.0171.0.000	PLATE	1

ELECTRICAL - I

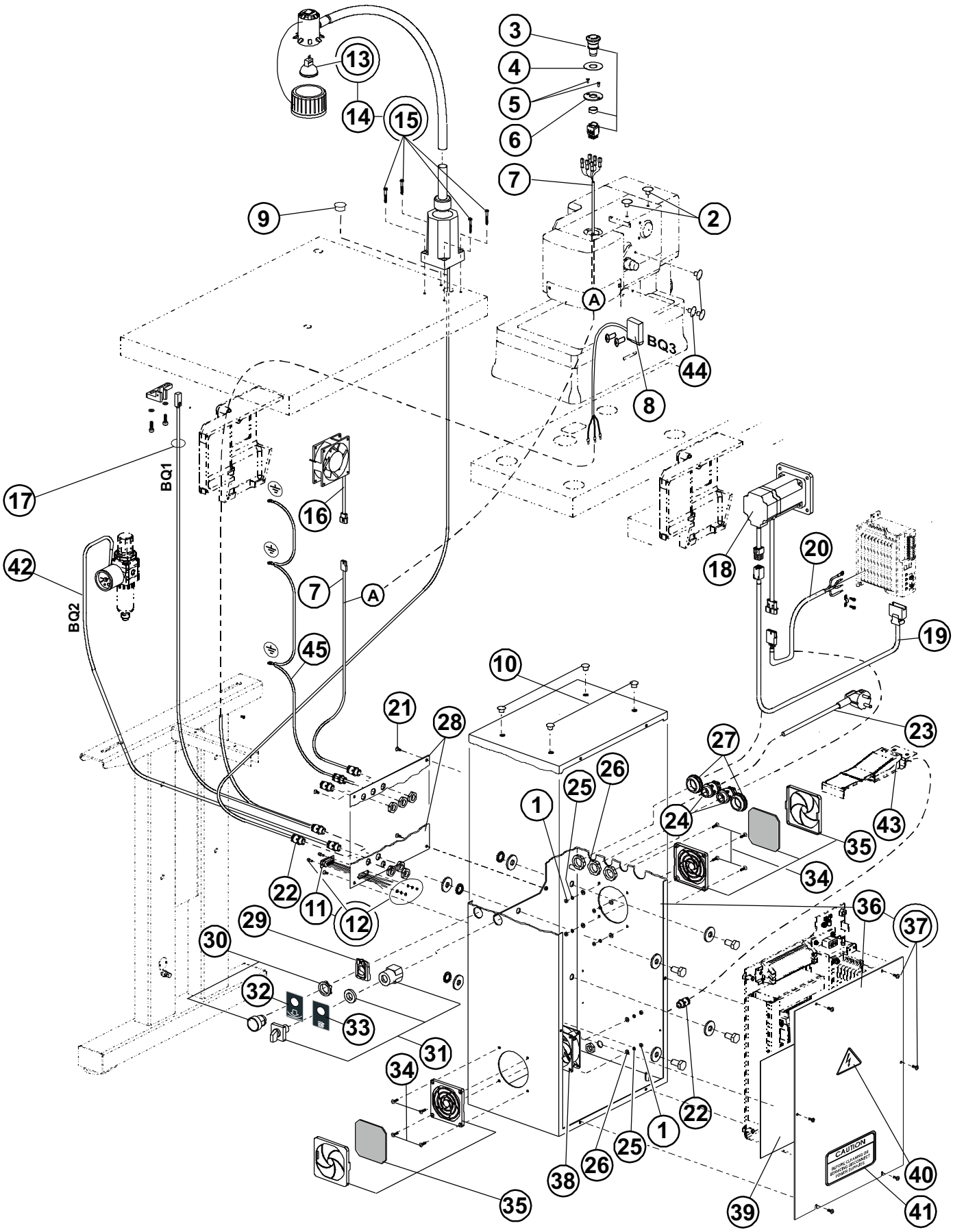

Revised: 06/2022
E-mail: info@amfreece-cars.cz

ELECTRICAL - I

DET	PART NUMBER	DESCRIPTION	QTY.
01	08.6700.4.000	Nut M4	8
02	12.0008.4.570	Plug	2
03	12.0008.4.563	Emergency Stop Button	1
04	12.8000.0.047	Label	1
05	08.6102.3.008	Screw	2
06	24.0148.0.000	Emergency Stop Cover	1
07	06.2400.0.012	Emergency Stop Cable	1
08	See Page 3-27	Sensor	1
09	12.0008.4.777	Plug	1
10	12.0008.4.215	Plug	4
11	06.2400.0.702	Cable	1
12	12.0008.4.710	Screw Kit	1
13	12.0008.4.679	Pulb 12V/12W	(1)
14	12.0008.4.403	Halogen Lamp Kit 12V Assembly	1
15		Screw	(4)
16	24.0059.9.069	Fan	1
17	24.0069.9.006	End of Cycle Sensor with Cable	1
18	12.0010.4.177	Servomotor Assembly	1
19	12.0010.4.178	Cable Encoder	1
20	12.0010.4.179	Motor Power Cable	1
21	08.6100.4.010	Screw	4
22	12.0008.4.207	Bushing ●●●	7
23	12.0008.4.885	Cable	1
24	12.0008.4.231	Bushing	2
25	08.6800.4.000	Washer	4
26	08.6850.4.000	Washer	4
27	12.0008.4.366	Plug PG 29	2
28	24.3325.0.000	Connectors Plate	1
29	12.0008.4.863	Block	1
30	12.0008.4.861	Switch (Black)	1
31	12.0008.4.835	Switch ON - OF	1
32	12.8000.0.041	Label (Clamp Up/Down)	1
33	12.8000.0.040	Label (Main Switch)	1
34	08.6100.4.014	Screw	1
35	12.0008.4.472	Fan Cover With Filter ●●●	2
36	04.9024.0.500	Electrical Box	1
37	08.6032.4.010	Screw M4x10	(6)
38	24.0059.0.017	Fan	1
39	12.8000.0.147	Electrical Diagram Label	1
40	12.0008.4.155	Label	1
41	00.2751.3.602	Pressure Gauge	1
42	See Page 3-46	Cable	
43	See Page 3-46	Cable	
44	12.0010.4.094	Plug	3
45		Cable Ground	1

ELECTRICAL - II

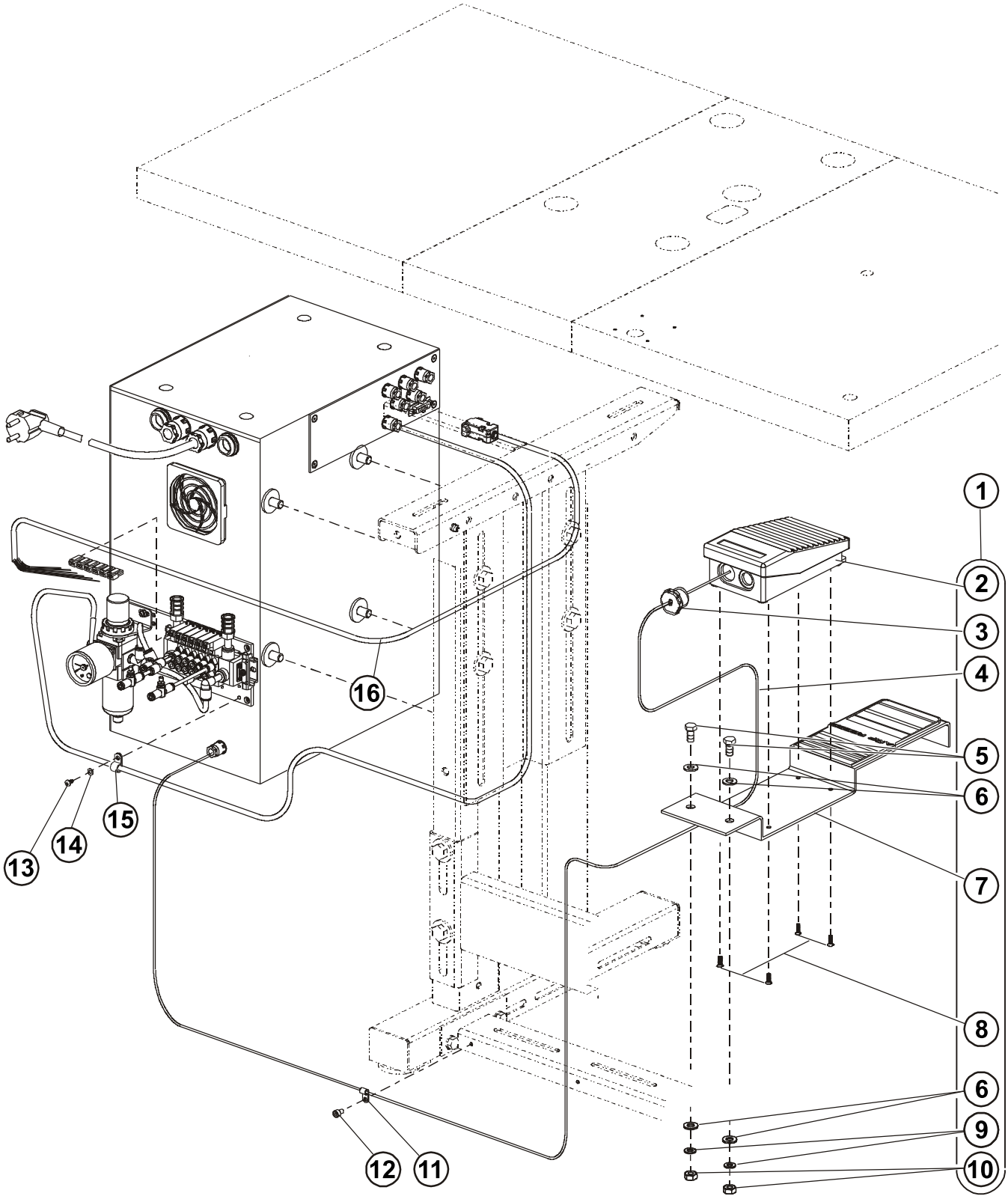

Revised: 06/2022
E-mail: info@amfreece-cars.cz

ELECTRICAL - II

DET	PART NUMBER	DESCRIPTION	QTY.
01	24.0069.9.038	Pedal Assembly	1
02	06.8800.0.001	Pedal ●●●	(1)
03	12.0008.4.296	Bushing ●●●	(1)
04	12.0008.4.306	Cable L=1400	(1)
05	08.6312.8.020	Screw M8x20	(2)
06	08.6852.8.000	Washer M8	(4)
07	24.0097.0.000	Holder Pedal	(1)
08	08.6100.4.012	Screw M4x12	(4)
09	08.6802.8.000	Spring Washer M8	(2)
10	08.6702.8.000	Nut M8	(2)
11	12.0008.4.279	Cord Clamp	1
12	08.6000.5.008	Screw M5x8	1
13	08.6683.4.007	Screw M4x7	1
14	08.6852.4.000	Washer M4	1
15	12.0008.4.280	Cord Clamp	1
16	12.0008.3.871	Cable Valve	1

ELECTRICAL - III

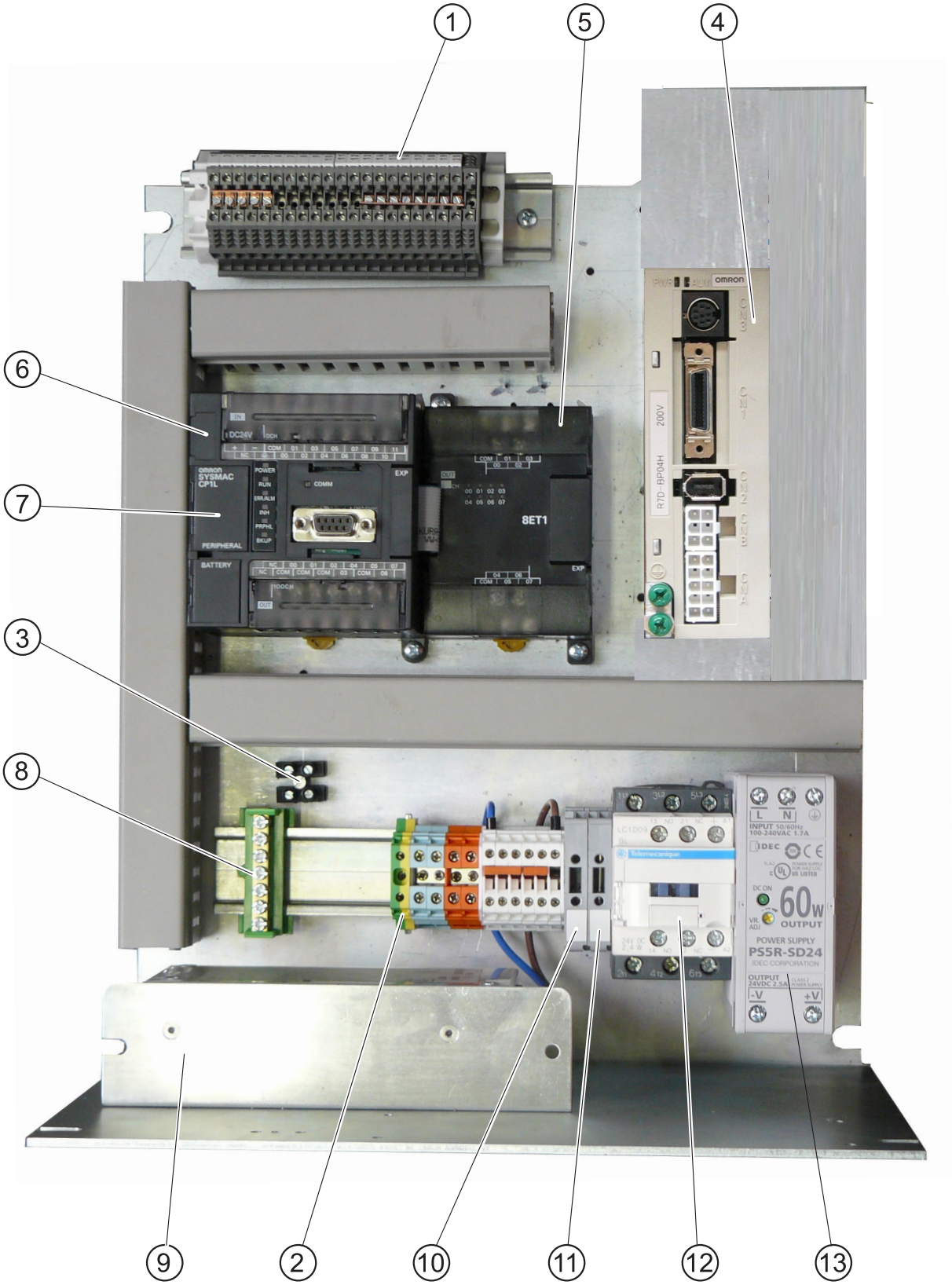

ELECTRICAL - III

DET	PART NUMBER	DESCRIPTION		QTY.
1		Terminal X1		1
2		Terminal X0		1
3		Terminal X12		1
4	24.8001.2.005	Servo	(U1)	
5	12.0010.4.071	Extension Block	(FX0N)	
6	24.8001.2.001	PLC		1
7	12.0010.4.067	Port RS 232		1
8	12.0008.4.050	Bridge GND		1
9	12.0010.4.078	Filter	(Z2)	1
10	12.0008.4.665	Fuse T2A		1
11	12.0008.4.664	Fuse T10A		1
12	12.0008.4.833	Contactor	(KM1)	1
13	12.0010.4.071	Power	(GS1)	1

PANEL KIT

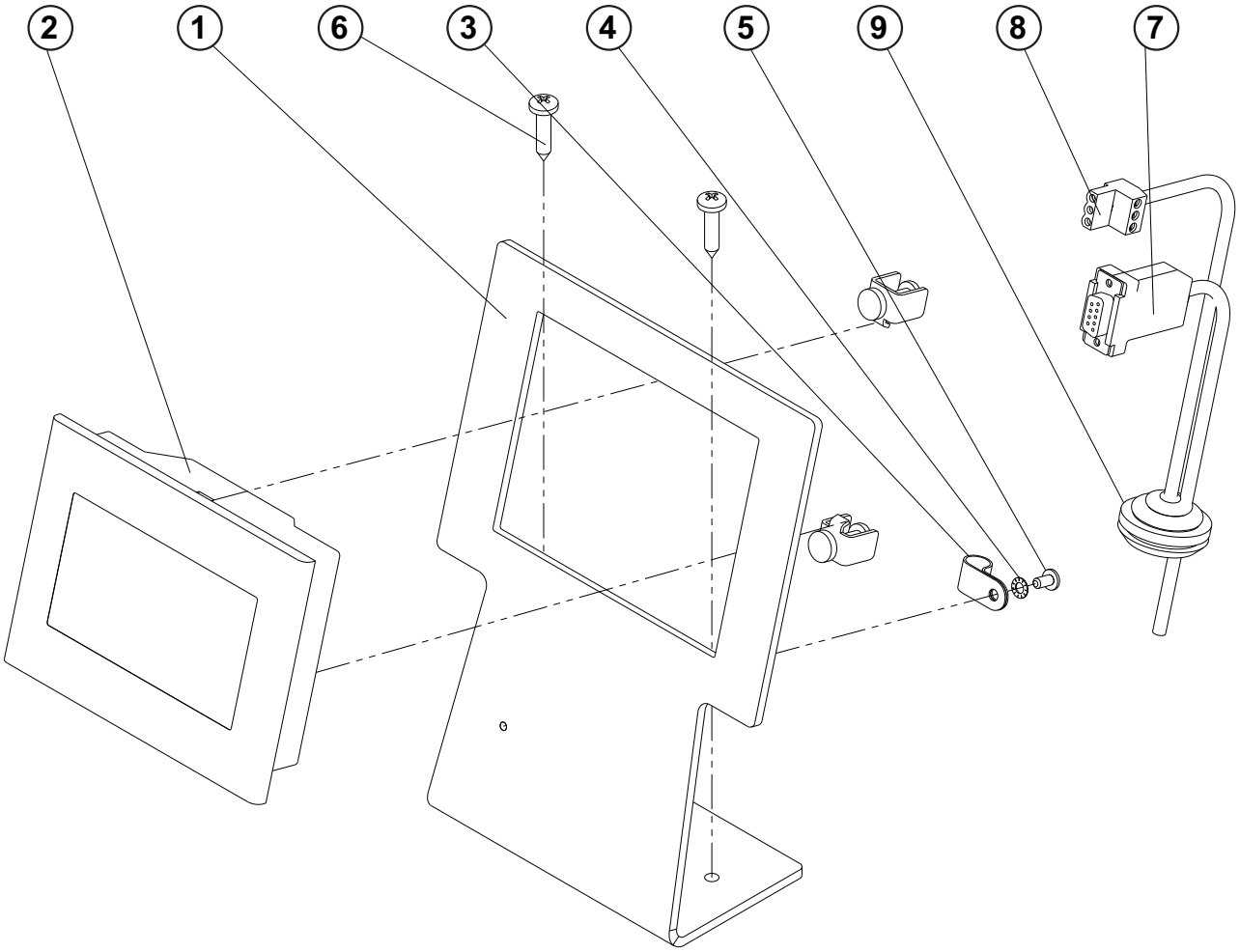

PANEL KIT

DET	PART NUMBER	DESCRIPTION	QTY.
01	24.0198.0.000	PANEL HOLDER-DELTA	1
02	12.0010.4.406	DISPLAY	1
03	07.6600.0.004	CLAMP CABLE	1
04	08.6832.4.000	WASHER M4	1
05	08.6032.4.008	SCREW M4-8	1
06	08.6663.5.025	SCREW 4,8-25	2
07	06.2400.0.023	CABLE DISPLAY DELTA	1
08	06.2400.0.019	CABLE DISPLAY DELTA POWER	1
09	12.0008.4.366	RUBBER PLUG 29	1

PNEUMATICS

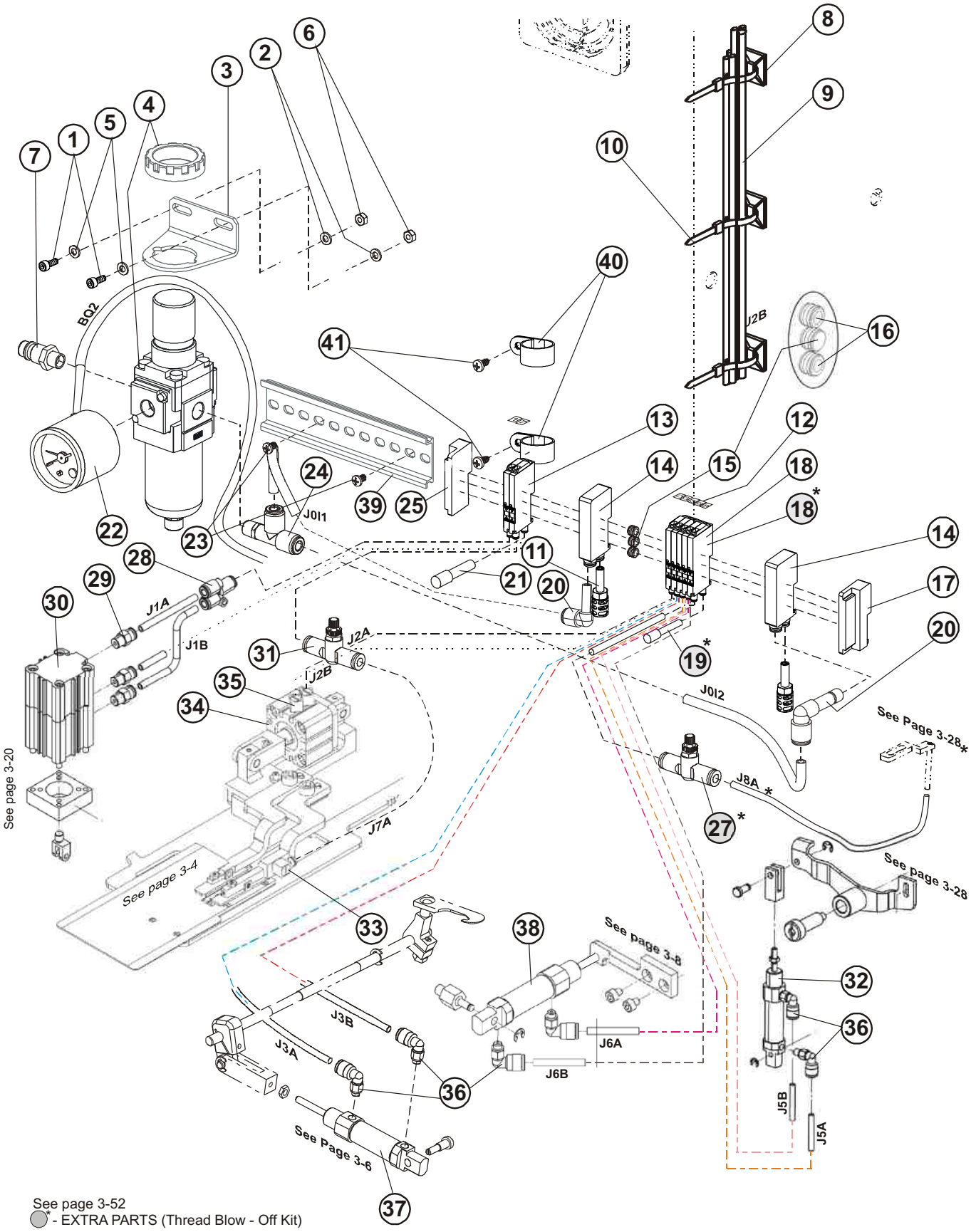

See page 3-52

* - EXTRA PARTS (Thread Blow - Off Kit)

Revised: 06/2022
E-mail: info@amfreece-cars.cz

PNEUMATICS

DET	PART NUMBER	DESCRIPTION	QTY.
1	08.6000.5.012	M5x12 Screw	2
2	08.6832.5.000	Washer M5	2
3	12.0010.3.138	Bracket	1
4	12.0010.3.137	Regulator	1
5	08.6850.5.000	Washer M5	2
6	08.6700.5.000	Nut M5	2
7	12.0008.3.420	Connector	1
8	12.0010.4.159	Clip	4
9	24.2061.1.000	Air Tubing - CAED	1
		Air Tubing 6x1 BL JOI1 JOI2 J1A J1B J7A Air Tubing 4x0.75 BL J1A1 = J2A = J3B = J5A = J5B J6A = J6B = J8A	
10	12.0008.3.023	TY-wrap	4
11	12.0010.3.030	Silencer	2
12	12.8000.0.042	Label KIT - CAED	1
13	12.0008.3.869	Valve	2
14	12.0008.3.829	Air Supply Block Assy.	2
15	12.0008.3.839	Blind	2
16	12.0008.3.838	Blind	1
17	12.0008.3.830	Rail Stopper	1
18*	12.0008.3.828	Valve	1
19*	12.0008.3.426	Plug	1
20	12.0010.3.164	Connector	2
21	12.0008.3.437	Plug	1
22	12.0008.3.418	Pressure Gauge	1
23	08.6200.4.006	M4x6 Screw	2
24	12.0010.3.032	Connector	1
25	12.0008.3.831	Rail Stopper	1
26			
27*	12.0010.3.029	Speed Controller	1
28	12.0010.3.161	Connector	1
29	12.0010.3.160	Connector	3
30	12.0008.3.442	Cylinder	1
31	12.0010.3.163	Speed Controller	1
32	12.0008.3.410	Cylinder	1
33	12.0008.3.462	Connector	1
34	12.0008.3.412	Cylinder	1
35	12.0008.3.444	Connector	2
36	12.0010.3.028	Connector	6
37	24.0050.1.000	Cylinder modif.	1
38	24.2072.0.000	Cylinder modif.	1
39	12.0008.3.853	DIN Rail	1
40	12.0008.4.280	Clamp	2
41	08.6683.4.007	Screw	2

* - EXTRA PARTS (Thread Blow - Off Kit)

ACCESSORIES

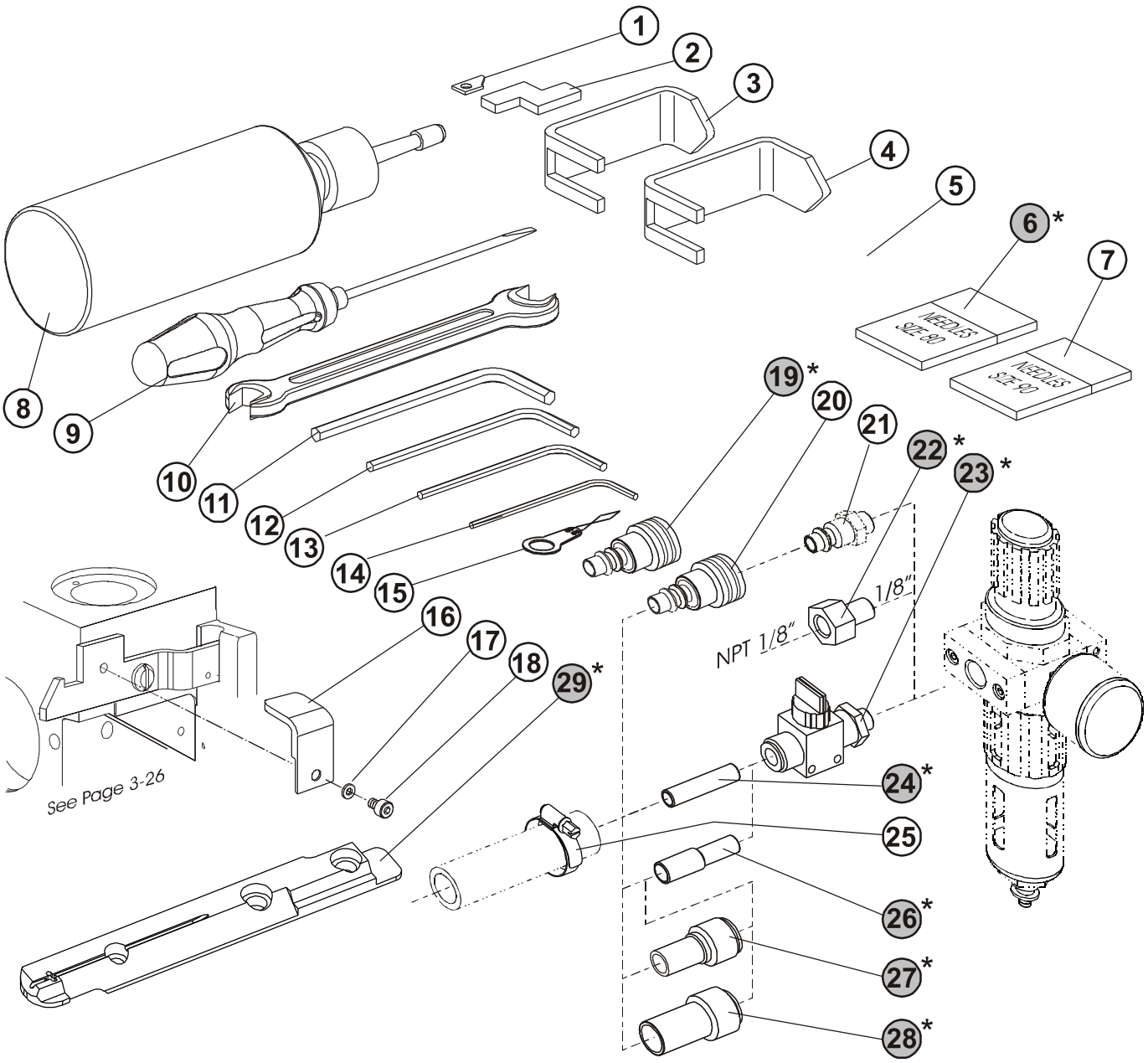

* — **EXTRA PARTS**

Revised: 06/2022
E-mail: info@amfreece-cars.cz

ACCESSORIES

DET	PART NUMBER	DESCRIPTION	QTY.
01	20.0094.0.000	Trimmer Knife	1
02	22.0209.0.000	Looper Gauge	1
03	24.0030.0.000	Main Shaft Pulley Bracket	1
04	24.0024.0.000	Needle Bar Shaft Pulley Bracket	1
05	02.0750.2.109	Needle, Size 70	10
06*	02.0750.2.100	Needle, Size 80	10
07*	02.0750.2.110	Needles, Size 90	10
08	05.1322.0.000	Oiler ●●●	1
09	12.0008.6.001	Screwdriver	1
10	12.0008.6.109	Wrench	1
11	12.0008.6.102	Allen Key Wrench 4	1
12	12.0008.6.101	Allen Key Wrench 3	1
13	12.0008.6.112	Allen Key Wrench 2-1/2	1
14	12.0008.6.100	Allen Key Wrench 2	1
15	12.0008.6.105	Needle Threader	1
16	22.0213.0.000	Bracket	1
17	08.6850.4.000	M4 Washer	1
18	08.6000.4.005	M4 x 5 Screw	1
19*	12.0008.3.607	Connector Dia 8	1
20	12.0008.3.608	Connector Dia 10	1
21	See page 3-46	Connector	—
22*	12.0008.3.081	Pneumatic Adapter (1/8” / NPT 1/8”)	1
23*	12.0008.3.463	Handvalve	1
24*	12.0008.3.464	Connector	1
25	12.0008.3.251	Air Tubing Clamp	1
26*	12.0008.3.466	Connector	1
27*	12.0008.3.467	Connector	1
28*	12.0008.3.465	Connector	1
29*	24.2075.4.000	Throat Plate	1

* - EXTRA PARTS

EXTRA PARTS

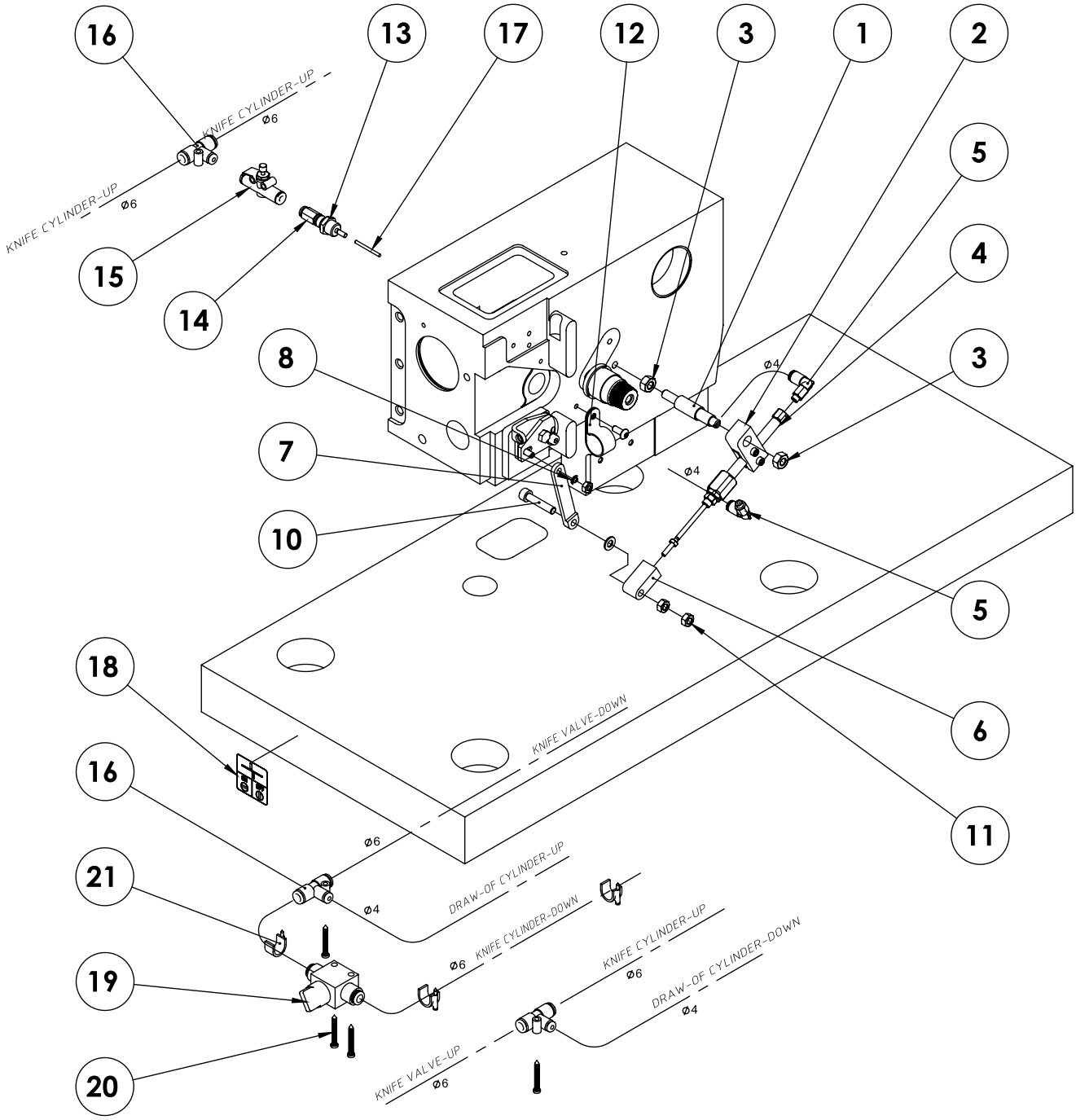

Revised: 06/2022
E-mail: info@amfreece-cars.cz

EXTRA PARTS

DET	PART NUMBER	DESCRIPTION	QTY.
01	24.4053.0.000	Stud	1
02	24.4052.0.000	Cylinder Holder Assy.	1
03	08.6700.6.000	Nut M6	2
04	12.0008.3.499	Cylinder	1
05	12.0010.3.028	Connector	2
06	24.4054.0.000	Knuckle	1
07	24.4055.0.000	Rod Tension	1
08	08.6800.4.000	Washer 4	1
09	08.6850.5.000	Washer 5,3	1
10	08.6000.5.025	Screw M5-25	1
11	08.6700.5.000	Nut M5	2
12	12.0008.4.253	Clamp	1
13	12.0008.3.413	Cylinder	1
14	12.0010.3.027	Connector	1
15	12.0010.3.029	Speed Valve	1
16	12.0010.3.166	Connector	3
17	12.1010.2.003	Pin 2m6-24	1
18	12.8000.0.029	Label On/Off Caed	1
19	12.0008.3.611	Valve	1
20	08.6662.3.025	Screw	4
21	12.0008.4.227	Clamp	4
22	12.0008.3.415	Air Tubing	1,5 m
23	12.0008.3.416	Air Tubing	2 m

EXTRA PARTS - BLOW-OF KIT

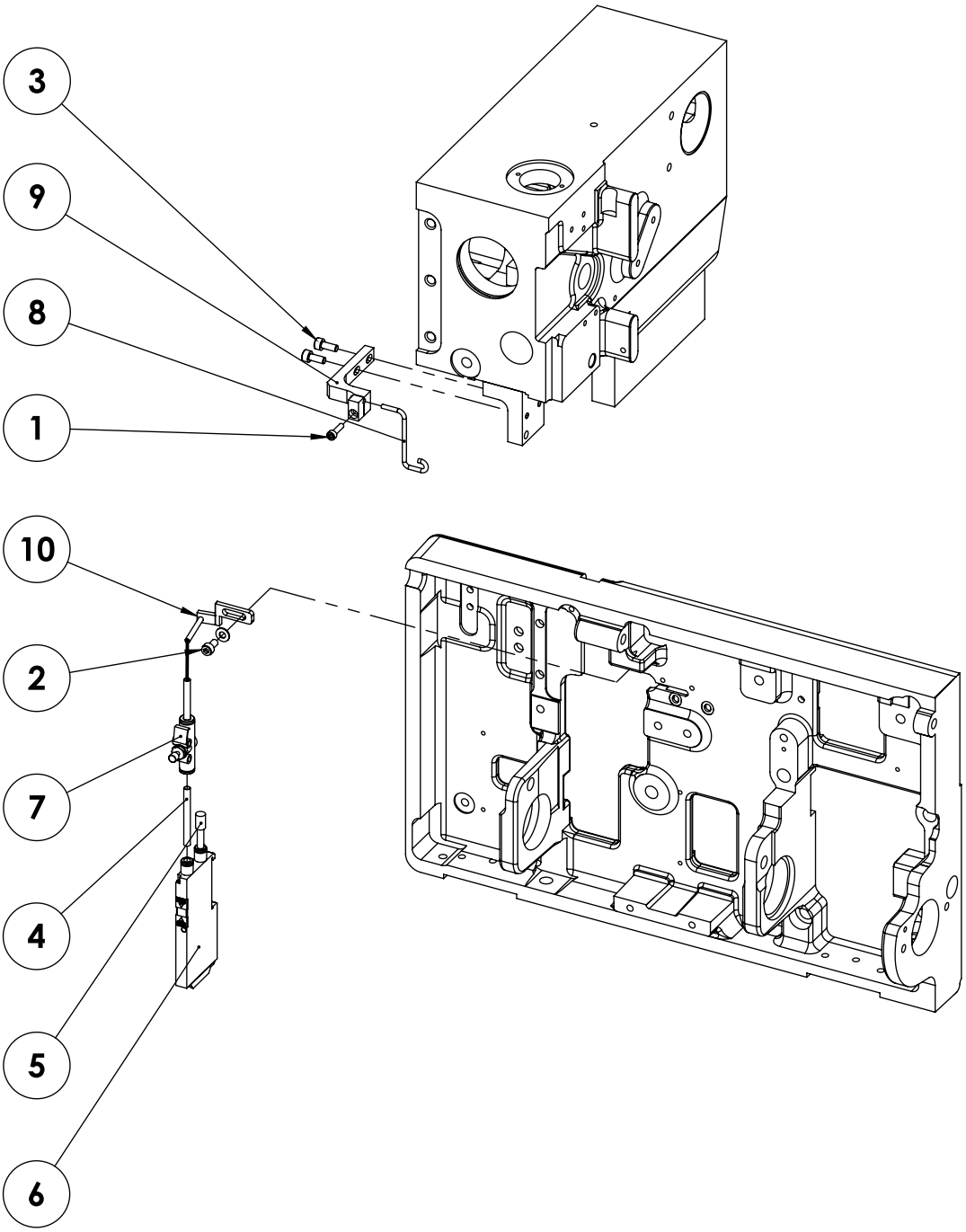

Revised: 06/2022
E-mail: info@amfreece-cars.cz

EXTRA PARTS - BLOW-OF KIT

DET	PART NUMBER	DESCRIPTION	QTY.
01	08.6000.3.012	Screw M3-12	1
02	08.6000.4.008	Screw M4-8	1
03	08.6000.4.010	Screw M4-10	2
04	12.0008.3.416	Air Tube	2m
05	12.0008.3.426	Plug	1
06	12.0008.3.828	5/2 Valve	1
06	12.0010.3.029	Speed Valve	1
07	24.2067.0.000	Thread Holder	1
08	24.2068.0.000	Bracket, Thread Blower	1
09	24.3318.0.000	Blow-Off Assy.	1

EXTRA PARTS - ELASTIC MATERIALS

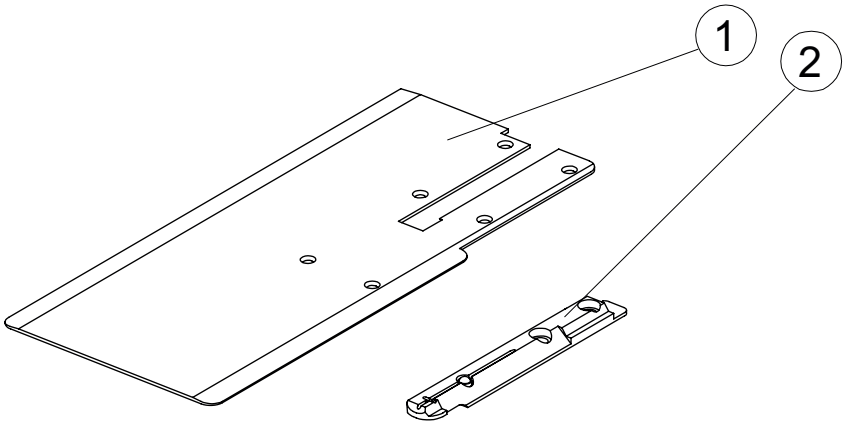

Revised: 06/2022
E-mail: info@amfreece-cars.cz

EXTRA PARTS - ELASTIC MATERIALS

DET	PART NUMBER	DESCRIPTION	QTY.
01	24.6102.4.005	Loading Plate	1
02	24.2075.5.000	Throat Plate	1

INDEX

PART NUMBER	PAGE	DET	QTY	PART NUMBER	PAGE	DET	QTY	PART NUMBER	PAGE	DET	QTY
00.2751.3.602	3-41	41	1	07.6045.0.047	3-29	36	1	08.6000.5.012	3-49	1	2
04100031	3-31	66	1	07.6045.0.054	3-29	19	1	08.6000.5.016	3-3	37	1
01.1382.0.000	3-15	06	1	07.6321.0.001	3-25	11	1	08.6000.5.016	3-21	20	4
01.1397.0.000	3-15	11	4	07.6321.0.025	3-11	50	2	08.6000.5.016	3-29	46	3
01.2084.0.000	3-5	31	2	07.6321.0.025	3-19	16	2	08.6000.5.020	3-11	15	2
01.2193.0.000	3-3	2	1	07.6321.0.029	3-19	13	(2)	08.6000.5.025	3-53	10	1
01.2376.0.000	3-5	35	6	07.6321.0.030	3-13	61	(1)	08.6000.6.010	3-21	23	2
01.2386.0.000	3-7	03	1	07.6440.0.018	3-11	41	2	08.6000.6.016	3-3	22	2
01.4980.0.000	3-27	36	1	07.6440.0.028	3-11	23	2	08.6000.6.016	3-31	60	2
01.6551.0.000	3-3	7	1	07.6440.0.028	3-19	18	2	08.6000.6.025	3-19	01	1
01.6551.0.000	3-21	10	3	07.6440.0.033	3-11	08	2	08.6000.6.025	3-27	27	2
01.7447.1.000	3-3	5	1	07.6440.0.036	3-15	21	3	08.6000.6.030	3-3	15	(1)
01.7447.1.000	3-21	11	3	07.6440.0.037	3-25	04	2	08.6000.8.025	3-27	06	2
01.7804.0.000	3-3	18	1	07.6440.0.040	3-9	10	1	08.6000.8.040	3-27	11	2
01.7805.0.000	3-3	23	1	07.6440.0.041	3-11	11	1	08.6002.3.012	3-21	48*	1
01.7805.0.000	3-29	50	2	07.6440.0.045	3-25	27	1	08.6002.4.005	3-21	28	1
01.7806.0.000	3-27	16	2	07.6440.0.050	3-11	18	1	08.6002.4.006	3-21	18	1
01.7809.0.000	3-3	17	1	07.6440.0.051	3-27	09	1	08.6002.4.010	3-21	38*	4
02.0750.2.100	3-51	06*	10	07.6600.0.004	3-47	03	1	08.6002.5.010	3-5	22	1
02.0750.2.109	3-3	32	1	08.6000.3.006	3-29	16	1	08.6002.5.012	3-21	40	4
02.0750.2.109	3-51	05	10	08.6000.3.006	3-35	11	1	08.6002.5.020	3-21	33	2
02.0750.2.110	3-51	07*	10	08.6000.3.010	3-11	38	1	08.6002.5.022	3-5	25	4
04.1416.0.003	3-37	10	(1)	08.6000.3.010	3-15	17	1	08.6002.6.012	3-5	01	2
04.9000.0.125	3-37	38	(1)	08.6000.3.010	3-19	06	1	08.6012.4.010	3-17	11	1
04.9000.0.225	3-37	37	(1)	08.6000.3.012	3-55	01	1	08.6012.4.010	3-37	23	((1))
04.9000.0.325	3-37	47	((1))	08.6000.3.016	3-33	09	4	08.6032.4.008	3-47	05	1
04.9024.0.002	3-37	1	1	08.6000.3.040	3-33	08	1	08.6032.4.010	3-41	37	(6)
04.9024.0.002	3-37	21	(1)	08.6000.4.005	3-9	7	6	08.6100.3.008	3-19	05	2
04.9024.0.361	3-37	18	(1)	08.6000.4.005	3-13	58	2	08.6100.3.008	3-29	41	1
04.9024.0.500	3-41	36	1	08.6000.4.005	3-29	12	2	08.6100.3.030	3-11	01	2
04.9024.0.903	3-37	9	(1)	08.6000.4.005	3-29	26	1	08.6100.4.006	3-9	1	1
05.1322.0.000	3-51	08	1	08.6000.4.005	3-51	18	1	08.6100.4.006	3-29	8	2
06.2400.0.012	3-41	07	1	08.6000.4.006	3-33	15	2	08.6100.4.010	3-41	21	4
06.2400.0.019	3-47	08	1	08.6000.4.006	3-35	04	2	08.6100.4.012	3-43	08	(4)
06.2400.0.023	3-47	07	1	08.6000.4.008	3-55	02	1	08.6100.4.014	3-41	34	1
06.2400.0.702	3-41	11	1	08.6000.4.010	3-9	24	2	08.6100.5.010	3-25	09	1
06.8800.0.001	3-43	02	(1)	08.6000.4.010	3-55	03	2	08.6100.5.012	3-17	02	5
07.6045.0.009	3-11	19	2	08.6000.4.012	3-7	07	1	08.6100.5.016	3-33	01	7
07.6045.0.034	3-11	30	1	08.6000.4.014	3-11	45	2	08.6100.5.020	3-15	04	2
07.6045.0.037	3-11	16	2	08.6000.4.014	3-15	25	2	08.6100.5.020	3-17	07	1
07.6045.0.037	3-27	08	1	08.6000.4.014	3-19	08	2	08.6100.5.020	3-27	24	3
07.6045.0.042	3-7	09	1	08.6000.4.016	3-9	21	4	08.6100.5.020	3-27	33	1
07.6045.0.042	3-29	29	1	08.6000.4.025	3-11	32	2	08.6100.6.035	3-29	18	1
07.6045.0.046	3-5	21	2	08.6000.4.070	3-33	07	4	08.6102.3.008	3-41	05	2
07.6045.0.047	3-9	16	1	08.6000.5.008	3-43	12	1	08.6102.4.014	3-21	8	2

INDEX

PART NUMBER	PAGE	DET	QTY	PART NUMBER	PAGE	DET	QTY	PART NUMBER	PAGE	DET	QTY
08.6102.5.012	3-5	38	2	08.6490.6.025	3-23	51	1	08.6832.4.000	3-47	04	1
08.6102.5.016	3-21	21	8	08.6652.3.016	3-37	14	(2)	08.6832.5.000	3-49	2	2
08.6120.3.008	3-29	4	8	08.6662.3.025	3-53	20	4	08.6832.6.000	3-37	30	((1))
08.6200.4.006	3-49	23	2	08.6663.5.025	3-37	20	(11)	08.6832.8.000	3-37	39	((2)+(2))
08.6200.4.008	3-27	17	2	08.6663.5.025	3-47	06	2	08.6850.4.000	3-29	25	1
08.6200.4.008	3-33	17	2	08.6676.3.020	3-37	8	(21)	08.6850.4.000	3-41	26	4
08.6200.5.006	3-29	23	2	08.6683.4.007	3-43	13	1	08.6850.4.000	3-51	17	1
08.6200.5.008	3-27	04	1	08.6683.4.007	3-49	41	2	08.6850.5.000	3-27	02	7
08.6200.5.012	3-17	03	6	08.6700.4.000	3-7	11	1	08.6850.5.000	3-29	39	3
08.6200.5.020	3-17	16	1	08.6700.4.000	3-29	22	1	08.6850.5.000	3-33	04	4
08.6200.6.025	3-3	31	1	08.6700.4.000	3-41	01	8	08.6850.5.000	3-49	5	2
08.6202.3.008	3-5	03	2	08.6700.5.000	3-17	09	2	08.6850.5.000	3-53	09	1
08.6202.4.008	3-23	54	1	08.6700.5.000	3-19	24	2	08.6850.6.000	3-27	28	2
08.6202.5.006	3-21	43	1	08.6700.5.000	3-27	31	4	08.6850.8.000	3-13	56	1
08.6312.0.020	3-37	27	((12))	08.6700.5.000	3-29	40	1	08.6850.8.000	3-15	32	1
08.6312.4.014	3-21	46	1	08.6700.5.000	3-49	6	2	08.6852.4.000	3-21	17	4
08.6312.6.020	3-37	33	((1))	08.6700.5.000	3-53	11	2	08.6852.4.000	3-37	24	((1))
08.6312.8.020	3-37	40		08.6700.6.000	3-37	45	(3)	08.6852.4.000	3-43	14	1
08.6312.8.020	3-43	05	(2)	08.6700.6.000	3-37	46	(1)	08.6852.5.000	3-21	42	1
08.6312.8.025	3-37	26	((4))	08.6700.6.000	3-53	03	2	08.6852.5.000	3-37	19	(11)
08.6312.8.060	3-39	1	16	08.6700.8.000	3-13	57	1	08.6852.6.000	3-7	13	1
08.6400.3.004	3-29	44	1	08.6700.8.000	3-15	33	1	08.6852.6.000	3-37	31	((1))
08.6400.3.005	3-3	12	4	08.6700.8.000	3-37	2	(8)	08.6852.8.000	3-37	17	(4)+(4)+((4)
08.6400.4.004	3-3	21	2 (2)	08.6702.4.000	3-5	20	1	08.6852.8.000	3-39	4	16
08.6400.4.004	3-15	01	2	08.6702.4.000	3-21	19	1	08.6852.8.000	3-43	06	(4)
08.6400.4.004	3-19	27	1	08.6702.8.000	3-37	42	(4)	08.6882.0.000	3-37	28	((12))
08.6400.4.004	3-21	26	2	08.6702.8.000	3-39	2	16	08.6887.5.000	3-9	9	1
08.6400.4.005	3-9	4	1	08.6702.8.000	3-43	10	(2)	12.0008.3.023	3-17	18	2
08.6400.4.005	3-11	28	6	08.6710.4.000	3-9	12	1	12.0008.3.023	3-27	12	1
08.6400.4.005	3-19	20	1	08.6710.5.000	3-13	52	2	12.0008.3.023	3-35	14	1
08.6400.4.012	3-29	28	1	08.6710.5.000	3-15	23	2	12.0008.3.023	3-37	12	(1)
08.6400.5.005	3-3	4	1	08.6712.3.000	3-5	05	2	12.0008.3.023	3-49	10	4
08.6400.5.005	3-11	33	1	08.6712.6.000	3-23	52	1	12.0008.3.081	3-51	22*	1
08.6400.5.005	3-27	25	2	08.6733.3.000	3-11	24	2	12.0008.3.251	3-51	25	1
08.6400.5.005	3-29	13	2	08.6800.4.000	3-11	43	2	12.0008.3.410	3-49	32	1
08.6400.5.008	3-27	26	2	08.6800.4.000	3-15	26	2	12.0008.3.412	3-49	34	1
08.6400.5.010	3-29	14	2	08.6800.4.000	3-41	25	4	12.0008.3.413	3-53	13	1
08.6400.5.305	3-11	13	4	08.6800.4.000	3-53	08	1	12.0008.3.415	3-53	22	1,5 m
08.6400.5.305	3-29	48	6	08.6802.6.000	3-37	32	((1))	12.0008.3.416	3-53	23	2 m
08.6402.3.004	3-5	10	1	08.6802.8.000	3-37	16	(4)+(4)	12.0008.3.416	3-55	04	2m
08.6402.3.006	3-5	06	1	08.6802.8.000	3-39	3	16	12.0008.3.418	3-49	22	1
08.6402.3.010	3-5	11	1	08.6802.8.000	3-43	09	(2)	12.0008.3.420	3-49	7	1
08.6402.4.004	3-5	18	2	08.6832.0.000	3-37	29	((8+2+2))	12.0008.3.426	3-49	19*	1
08.6402.4.012	3-5	19	1	08.6832.4.000	3-17	12	1	12.0008.3.426	3-55	05	1
08.6402.5.008	3-5	33	1	08.6832.4.000	3-37	25	((1))	12.0008.3.437	3-49	21	1

Revised: 07/2024
E-mail: info@amfreece-cars.cz

INDEX

PART NUMBER	PAGE	DET	QTY	PART NUMBER	PAGE	DET	QTY	PART NUMBER	PAGE	DET	QTY
12.0008.3.442	3-49	30	1	12.0008.4.477	3-5	30	(1)	12.0010.4.067	3-45	7	1
12.0008.3.444	3-49	35	2	12.0008.4.563	3-41	03	1	12.0010.4.071	3-45	5	0
12.0008.3.462	3-49	33	1	12.0008.4.570	3-41	02	2	12.0010.4.071	3-45	13	1
12.0008.3.463	3-51	23*	1	12.0008.4.664	3-45	11	1	12.0010.4.078	3-45	9	1
12.0008.3.464	3-51	24*	1	12.0008.4.665	3-45	10	1	12.0010.4.094	3-41	44	3
12.0008.3.465	3-51	28*	1	12.0008.4.679	3-41	13	(1)	12.0010.4.159	3-49	8	4
12.0008.3.466	3-51	26*	1	12.0008.4.710	3-41	12	1	12.0010.4.177	3-41	18	1
12.0008.3.467	3-51	27*	1	12.0008.4.777	3-37	6	(1)	12.0010.4.178	3-41	19	1
12.0008.3.499	3-53	04	1	12.0008.4.777	3-41	09	1	12.0010.4.179	3-41	20	1
12.0008.3.607	3-51	19*	1	12.0008.4.833	3-45	12	1	12.0010.4.406	3-47	02	1
12.0008.3.608	3-51	20	1	12.0008.4.835	3-41	31	1	12.1010.2.003	3-53	17	1
12.0008.3.611	3-53	19	1	12.0008.4.861	3-41	30	1	12.1011.0.001	3-27	32	1
12.0008.3.828	3-49	18*	1	12.0008.4.863	3-41	29	1	12.1016.0.000	3-37	35	((2))
12.0008.3.828	3-55	06	1	12.0008.4.885	3-41	23	1	12.1016.1.000	3-37	11	(2)
12.0008.3.829	3-49	14	2	12.0008.6.001	3-51	09	1	12.1045.2.001	3-3	29	1
12.0008.3.830	3-49	17	1	12.0008.6.100	3-51	14	1	12.1045.2.001	3-29	49	1
12.0008.3.831	3-49	25	1	12.0008.6.101	3-51	12	1	12.1045.3.001	3-7	04	1
12.0008.3.838	3-49	16	1	12.0008.6.102	3-51	11	1	12.2010.1.002	3-15	14	2
12.0008.3.839	3-49	15	2	12.0008.6.105	3-51	15	1	12.2050.0.003	3-3	20	1
12.0008.3.853	3-49	39	1	12.0008.6.109	3-51	10	1	12.2050.0.005	3-31	59	1
12.0008.3.869	3-49	13	2	12.0008.6.112	3-51	13	1	12.4030.0.002	3-31	56	1
12.0008.3.871	3-43	16	1	12.0008.6.527	3-39	5	2	12.5050.2.009	3-27	14	1
12.0008.4.050	3-45	8	1	12.0008.6.528	3-39	6	2	12.8000.0.029	3-53	18	1
12.0008.4.052	3-17	10	1	12.0008.6.800	3-19	23	1	12.8000.0.040	3-41	33	1
12.0008.4.052	3-37	22	((1))	12.0008.6.801	3-37	5	(4)	12.8000.0.041	3-41	32	1
12.0008.4.058	3-17	19	1	12.0008.6.813	3-37	34	((3))	12.8000.0.042	3-49	12	1
12.0008.4.058	3-37	13	(1)	12.0008.6.901	3-37	44	(1)	12.8000.0.047	3-41	04	1
12.0008.4.155	3-41	40	1	12.0008.6.964	3-37	41	((4))	12.8000.0.103	3-29	3	1
12.0008.4.197	3-17	08	1	12.0008.6.965	3-37	43	(1)	12.8000.0.147	3-41	39	1
12.0008.4.197	3-27	35	1	12.0010.3.027	3-53	14	1	12.8000.1.028	3-17	06	1
12.0008.4.207	3-41	22	7	12.0010.3.028	3-49	36	6	17.0019.0.228	3-31	62	1
12.0008.4.215	3-41	10	4	12.0010.3.028	3-53	05	2	17.0019.0.441	3-37	3	(4)
12.0008.4.227	3-53	21	4	12.0010.3.029	3-49	27*	1	17.0019.0.517	3-11	37	1
12.0008.4.231	3-41	24	2	12.0010.3.029	3-53	15	1	17.0019.2.057	3-11	25	1
12.0008.4.253	3-53	12	1	12.0010.3.029	3-55	06	1	17.0026.2.077	3-3	34	1
12.0008.4.279	3-43	11	1	12.0010.3.030	3-49	11	2	17.0027.1.799	3-35	09	1
12.0008.4.280	3-23	53	1	12.0010.3.032	3-49	24	1	17.0081.6.225	3-37	36	((1))
12.0008.4.280	3-43	15	1	12.0010.3.137	3-49	4	1	17.0082.6.000	3-35	10	1
12.0008.4.280	3-49	40	2	12.0010.3.138	3-49	3	1	17.0082.8.017	3-3	35	2
12.0008.4.296	3-43	03	(1)	12.0010.3.160	3-49	29	3	17.0082.8.082	3-27	21	1
12.0008.4.306	3-43	04	(1)	12.0010.3.161	3-49	28	1	17.0094.5.310	3-35	12	1
12.0008.4.366	3-41	27	2	12.0010.3.163	3-49	31	1	17.0095.1.272	3-37	4	(4)
12.0008.4.366	3-47	09	1	12.0010.3.164	3-49	20	2	17.0095.1.329	3-35	07	1
12.0008.4.403	3-41	14	1	12.0010.3.166	3-53	16	3	20.0092.0.004	3-7	02	1
12.0008.4.472	3-41	35	2	12.0010.4.013	3-17	17	1	20.0093.2.004	3-7	01	1

INDEX

PART NUMBER	PAGE	DET	QTY	PART NUMBER	PAGE	DET	QTY	PART NUMBER	PAGE	DET	QTY
20.0094.0.000	3-15	07	1	22.0120.0.000	3-35	05	1	22.0525.0.050	3-3	24	1
20.0094.0.000	3-51	01	1	22.0121.0.000	3-11	03	1	22.0530.0.000	3-3	10	1
20.0111.0.000	3-15	08	1	22.0137.0.000	3-25	10	2	22.0535.0.100	3-3	30	1
20.0112.0.000	3-15	10	1	22.0143.0.000	3-31	64	1	22.0540.0.000	3-3	14	1
22.0008.0.000	3-19	02	1	22.0153.0.000	3-31	51	2	22.0541.0.000	3-3	13	1
22.0009.0.000	3-19	12	(1)	22.0159.0.000	3-5	16	1	22.0542.0.000	3-3	11	1
22.0009.0.050	3-19	28	1	22.0173.0.000	3-5	23	2	22.0545.0.000	3-3	25	1
22.0020.0.000	3-19	22	1	22.0175.0.000	3-3	27	1	22.0545.0.000	3-31	54	1
22.0021.0.000	3-11	47	1	22.0182.0.000	3-25	12	2	22.1010.0.000	3-17	04	2
22.0021.0.000	3-15	27	1	22.0183.0.000	3-11	39	1	22.1422.0.000	3-27	20	1
22.0022.0.000	3-13	55	1	22.0183.0.000	3-15	18	1	22.2410.0.000	3-15	03	1
22.0022.0.000	3-15	31	1	22.0183.0.000	3-19	07	1	22.2425.0.050	3-15	19	1
22.0023.0.000	3-15	28	1	22.0184.0.000	3-11	21	3	22.2440.0.000	3-15	05	2
22.0024.0.000	3-15	22	1	22.0186.0.000	3-11	27	1	22.2442.0.000	3-15	02	2
22.0026.0.000	3-11	40	1	22.0208.0.000	3-11	26	1	22.2607.0.000	3-25	01	1
22.0027.0.000	3-19	19	1	22.0209.0.000	3-51	02	1	22.2626.0.000	3-25	03	1
22.0028.0.000	3-19	17	2	22.0213.0.000	3-51	16	1	22.2627.0.000	3-25	02	2
22.0029.0.000	3-19	15	2	22.0214.0.000	3-19	10	1	22.2631.0.000	3-29	20	1
22.0030.0.000	3-19	26	1	22.0219.0.000	3-37	48	1	22.2633.0.000	3-29	30	1
22.0031.0.000	3-13	51	2	22.0228.0.000	3-11	12	1	22.2652.0.000	3-9	19	1
22.0031.0.000	3-15	15	2	22.0229.0.000	3-35	03	2	22.2653.0.000	3-9	22	1
22.0032.0.000	3-11	49	2	22.0230.0.000	3-3	8	2	22.2655.0.000	3-9	6	1
22.0049.0.000	3-11	31	1	22.0232.0.000	3-13	53	1	22.2656.0.000	3-9	20	1
22.0054.0.000	3-27	05	1	22.0232.0.000	3-15	24	1	22.2657.0.000	3-9	23	1
22.0057.0.000	3-33	14	1	22.0233.0.000	3-15	30	1	22.2665.0.000	3-9	5	1
22.0058.0.000	3-27	07	1	22.0239.0.000	3-3	9	2	22.3003.0.000	3-25	28	1
22.0061.0.000	3-11	07	1	22.0300.0.000	3-31	53	1	22.3068.0.000	3-29	1	2
22.0062.0.000	3-27	10	1	22.0305.0.000	3-11	35	1	22.6002.0.000	3-27	23	1
22.0063.0.000	3-19	04	1	22.0309.0.000	3-11	20	(1)	22.8400.0.000	3-31	52	1
22.0064.0.000	3-15	16	1	22.0309.0.050	3-13	59	1	23.2106.0.000	3-15	09	1
22.0064.0.000	3-19	14	2	22.0312.0.000	3-11	06	1	23.2107.0.000	3-15	12	1
22.0069.0.000	3-19	21	1	22.0313.0.000	3-11	17	(1)	23.2113.0.000	3-29	24	1
22.0097.0.000	3-25	13	1	22.0315.0.000	3-11	22	1	23.2114.0.000	3-31	65	1
22.0100.0.000	3-11	34	4	22.0320.0.000	3-11	36	1	24.0001.0.000	3-3	33	1
22.0100.0.000	3-15	20	3	22.0325.0.000	3-11	10	1	24.0002.0.000	3-3	28	1
22.0100.0.000	3-19	11	4	22.0336.0.000	3-11	44	1	24.0002.0.000	3-31	61	1
22.0104.0.000	3-35	06	1	22.0353.0.000	3-11	48	3	24.0003.0.000	3-7	06	1
22.0105.0.000	3-15	29	1	22.0354.0.000	3-11	04	1	24.0004.0.000	3-7	08	1
22.0106.0.000	3-25	25	2	22.0370.0.000	3-11	46	1	24.0005.0.000	3-7	10	1
22.0106.0.000	3-29	34	1	22.0400.0.000	3-9	3	1	24.0006.0.000	3-31	55	1
22.0107.0.000	3-35	13	1	22.0405.2.000	3-9	8	1	24.0006.1.000	3-7	14	1
22.0108.0.000	3-35	08	1	22.0408.0.000	3-29	9	1	24.0018.0.000	3-29	15	1
22.0110.0.000	3-13	54	1	22.0510.0.000	3-3	3	1	24.0019.0.000	3-31	58	1
22.0110.0.000	3-19	09	1	22.0520.0.000	3-3	6	1	24.0020.0.000	3-29	45	1
22.0114.0.000	3-11	02	1	22.0525.0.000	3-3	16	(1)	24.0024.0.000	3-51	04	1

Revised: 07/2024
E-mail: info@amfreece-cars.cz

INDEX

PART NUMBER	PAGE	DET	QTY	PART NUMBER	PAGE	DET	QTY	PART NUMBER	PAGE	DET	QTY
24.0027.0.000	3-29	43	1	24.1000.0.000	3-31	57	1	24.2069.0.000	3-21	5	1
24.0030.0.000	3-51	03	1	24.2001.0.000	3-21	22	1	24.2070.0.000	3-27	18	1
24.0033.0.000	3-19	25	1	24.2002.0.000	3-21	30	1	24.2071.3.000	3-21	41	1
24.0036.0.000	3-5	29	1	24.2004.0.000	3-21	29	2	24.2072.0.000	3-49	38	1
24.0038.0.000	3-17	05	1	24.2005.0.000	3-21	31	1	24.2073.2.000	3-5	08	1
24.0048.0.000	3-3	26	1	24.2006.0.000	3-21	36	1	24.2074.2.000	3-5	15	1
24.0049.0.000	3-11	14	2	24.2007.0.000	3-21	32	1	24.2075.3.000	3-5	32	1
24.0050.1.000	3-49	37	1	24.2008.0.000	3-21	37	1	24.2075.4.000	3-51	29*	1
24.0051.0.066	3-29	17	1	24.2009.0.000	3-21	35	1	24.2075.5.000	3-57	02	1
24.0055.0.000	3-19	03	1	24.2010.1.000	3-21	39	1	24.2076.0.000	3-5	09	2
24.0059.0.017	3-41	38	1	24.2012.0.000	3-21	45	1	24.2400.0.000	3-29	47	1
24.0059.9.069	3-41	16	1	24.2013.0.000	3-21	25	1	24.2640.2.000	3-25	26	1
24.0066.0.000	3-15	13	2	24.2014.0.000	3-21	6	1	24.2651.4.001	3-9	11	1
24.0067.0.000	3-33	03	1	24.2015.0.000	3-21	24	1	24.2664.4.000	3-9	2	1
24.0068.0.000	3-33	02	1	24.2016.0.000	3-9	13	1	24.3201.0.000	3-25	06	1
24.0069.9.006	3-41	17	1	24.2017.0.000	3-9	15	1	24.3203.0.000	3-25	08	1
24.0069.9.020	3-27	19	1	24.2017.0.000	3-29	38	1	24.3318.0.000	3-29	24*	1
24.0069.9.038	3-43	01	1	24.2018.0.000	3-29	31	1	24.3318.0.000	3-55	09	1
24.0069.9.040	3-37	7	(1)	24.2019.0.000	3-29	32	1	24.3325.0.000	3-41	28	1
24.0080.0.000	3-7	05	1	24.2020.0.000	3-29	33	1	24.4052.0.000	3-53	02	1
24.0097.0.000	3-43	07	(1)	24.2025.0.000	3-29	21	1	24.4053.0.000	3-53	01	1
24.0100.0.000	3-3	36	1	24.2028.0.000	3-21	34	1	24.4054.0.000	3-53	06	1
24.0106.1.000	3-27	29	1	24.2032.0.000	3-29	2	1	24.4055.0.000	3-53	07	1
24.0108.0.000	3-27	15	1	24.2035.0.000	3-11	29	1	24.6000.6.000	3-27	03	1
24.0111.0.000	3-17	01	1	24.2038.0.000	3-5	24	1	24.6001.7.000	3-33	10	1
24.0112.0.000	3-33	11	1	24.2040.0.000	3-25	05	1	24.6003.0.000	3-33	13	1
24.0119.0.050	3-27	22	1	24.2042.0.000	3-21	9	1	24.6004.7.00	3-33	06	1
24.0125.6.000	3-5	37	1	24.2043.0.000	3-21	13	1	24.6005.1.002	3-17	13	1
24.0126.0.000	3-11	05	1	24.2044.0.000	3-21	12	1	24.6100.4.000	3-29	11	1
24.0127.0.000	3-11	42	1	24.2045.0.000	3-21	15	1	24.6102.4.001	3-29	6	1
24.0139.0.000	3-35	02	1	24.2046.0.000	3-21	16	1	24.6102.4.002	3-29	5	1
24.0140.0.000	3-13	60	1	24.2047.0.000	3-21	14	1	24.6102.4.004	3-5	36	1
24.0141.0.000	3-35	01	1	24.2048.0.000	3-21	27	1	24.6102.4.005	3-57	01	1
24.0148.0.000	3-41	06	1	24.2049.0.000	3-21	44	1	24.8001.2.001	3-45	6	1
24.0154.0.000	3-33	16	1	24.2050.0.000	3-21	50	1	24.8001.2.005	3-45	4	0
24.0157.0.000	3-5	17	1	24.2053.0.000	3-21	7	1				
24.0158.0.000	3-5	34	1	24.2058.0.000	3-5	39	1				
24.0170.0.000	3-39	7	3	24.2061.1.000	3-49	9	1				
24.0171.0.000	3-39	8	1	24.2064.0.000	3-5	14	1				
24.0195.4.000	3-3	1	1	24.2065.0.000	3-31	63	1				
24.0198.0.000	3-47	01	1	24.2066.0.000	3-29	10	1				
24.0226.4.000	3-5	04	1	24.2067.0.000	3-21	49*	1				
24.0227.4.000	3-5	02	1	24.2067.0.000	3-55	07	1				
24.0351.0.000	3-11	09	1	24.2068.0.000	3-21	47*	1				
24.0500.0.000	3-3	19	1	24.2068.0.000	3-55	08	1				