AMF® REECE

Better Ideas, Better Made

MODEL S-4000 ISBH Omron

STRAIGHT BUTTONHOLE MACHINE FOR IMITATION SLEEVE BUTTONHOLES

PARTS AND SERVICE MANUAL

MACHINE SERIAL No:

PART NUMBER 97.2433.3.001

5 / 2024

LIMITED WARRANTY ON NEW AMF REECE EQUIPMENT

Warranty provisions:

A ninety (90) day limited service labor warranty to correct defects in installation, workmanship, or material without charge for labor. This portion of the warranty applies to machines sold as ”installed” only.

A one (1) year limited material warranty on major component parts to replace materials with defects. Any new part believed defective must be returned freight prepaid to AMF Reece, Inc. for inspection. If, upon inspection, the part or material is determined to be defective, AMF Reece, Inc. will replace it without charge to the customer for parts or material.

Service labor warranty period shall begin on the completed installation date. Material warranty shall begin on the date the equipment is shipped from AMF Reece, Inc.

Exclusions:

Excluded from both service labor warranty and material warranty are: (1) Consumable parts which would be normally considered replaceable in day-to-day operations. These include parts such as needles, knives, loopers and spreaders. (2) Normal adjustment and routine maintenance. This is the sole responsibility of the customer. (3) Cleaning and lubrication of equipment. (4) Parts found to be altered, broken or damaged due to neglect or improper installation or application. (5) Damage caused by the use of non-Genuine AMF Reece parts. (6) Shipping or delivery charges.

There is no service labor warranty for machines sold as ”uninstalled”.

Equipment installed without the assistance of a certified technician (either an AMF Reece Employee, a Certified Contractor, or that of an Authorized Distributor) will have the limited material warranty only. Only the defective material will be covered. Any charges associated with the use of an AMF Reece Technician or that of a Distributor to replace the defective part will be the customer’s responsibility.

NO OTHER WARRANTY, EXPRESS OR IMPLIED, AS TO DESCRIPTION, QUALITY, MERCHANTABILITY, and FITNESS FOR A PARTICULAR PURPOSE, OR ANY OTHER MATTER IS GIVEN BY SELLER OR SELLER’S AGENT IN CONNECTION HEREWITH. UNDER NO CIRCUMSTANCES SHALL SELLER OR SELLER’S AGENT BE LIABLE FOR LOSS OF PROFITS OR ANY OTHER DIRECT OR INDIRECT COSTS, EXPENSES, LOSSES OR DAMAGES ARISING OUT OF DEFECTS IN OR FAILURE OF THE EQUIPMENT OR ANY PART THEREOF.

WHAT TO DO IF THERE IS A QUESTION REGARDING WARRANTY

If a machine is purchased through an authorized AMF Reece, Inc. distributor, warranty questions should be first directed to that distributor. However, the satisfaction and goodwill of our customers are of primary concern to AMF Reece, Inc. In the event that a warranty matter is not handled to your satisfaction, please contact AMF Reece office:

AMF Reece - Cars s.r.o.
Tovární 837/9c
798 11 Prostejov
Czech Republic
e-mail: info@amfreece-cars.cz

TABLE OF CONTENTS

A - INTRODUCTION
1. BASIC INFORMATION 1
2. SAFETY DEVICE AND LABELS 2
3. GENERAL MACHINE PARTS DESCRIPTIONS 3
4. SPECIFICATIONS 4
5. TABLE TYPE 5
6. INSTRUCTIONS FOR OPERATOR SAFETY AND MAINTENANCE 6
7. SPECIAL ACCESSORIES 7

B - MACHINE ASSEMBLY
1. CONTENT OF THE SHIPPING BOX 9
2. ACCESSORIES 9
3. POWER AND AIR CONNECTION 11
4. HEAD PNEUMATIC 12
5. THREAD STAND INSTALLATION 13

C - PROPER APPLICATION
1. POWER UP / HOME POSITION 14
2. NEEDLE INSTALLATION 15
3. THREADING 16

D - MACHINE CONTROLS
1. PROGRESS OF SEWING 17
2. OPERATOR CONTROL PANEL PUSH BUTTONS AND SWITCHES 18
3. THE PROGRAMING MENU STITCHING HEAD 19
4. TESTS 21
5. PROGRAM VERSION 22
6. COUNTER RESET 22
7. PARAMETER CHECKLIST 23

E - MACHINE ADJUSTMENTS
1. MACHINE HOME POSITION 24
2. MAIN CAM ADJUSTMENT 25
3. THE PRINCIPLES FOR THE MACHINE ADJUSTMENT 25
4. NEEDLE BAR 26
5. BITE 27
6. FEEDING 29
7. SLIP CLUTCH 30
8. STITCH DENSITY 30
9. ADJUSTMENT OF BARRING STITCHES 31
10. SPACE BETWEEN THE FIRST AND SECOND ROW OF STITCHES 33
11. BUTTONHOLE LENGTH CHANGE 34
12. LOOPER ADJUSTMENT 35
13. THREAD DRAW-OFF 38
14. THREAD TENSION 39
15. THREAD TRIMMING 41
16. MACHINE HEAD CLAMP FEET ADJUSTMENT 42
17. ADJUSTMENT OF THE STOPPING SENSOR POSITION 43
18. CHANGING THE DRIVE BELT 44
19. THE MAIN CAM CHANGE 45

Released: 12/2021
E-mail: info@amfreece-cars.cz

TABLE OF CONTENTS

F - MACHINE MAINTENANCE
1. MACHINE CLEANING AND MAINTENANCE 46
2. PERIODIC MAINTENANCE 48
3. LUBRICATION DIAGRAM 49
4. MACHINE LUBRICATION 50
5. MACHINE DISPOSAL 52

G - PNEUMATIC DIAGRAM 53

H - ELECTRICAL DIAGRAM 54

A - INTRODUCTION

1. BASIC INFORMATION

The sewing machine S 4000 ISBH is designed and produced to be very reliable. Important design goals have been to provide a safe machine that is simple and in expensive to maintain.

The patented rotary needle bar shaft drive, a major benefit, delivers longer needle bar life. The benefits of lower vibration and less noise, translate into less operator fatigue. Simple buttonhole length adjustment located outside the machine, eliminates the need for tilt back, while the quick stop repair function delivers safety and makes repairs easier.

Special electronic and mechanical safety devices protect the operator and the machine. There is a special power lock out switch that permits the ma machine to be locked in the off position so that it cannot be cycled accidentally. There is an emergency off switch. There is a low air pressure detector that will not permit machine operation if air pressure is dangerously low.

There are safety-warning labels on the machine in all required special care. These must not be removed. If they are lost replace them immediately.

You are the most important safety equipment of all. Be sure you understand the proper operation of the machine. Never remove safety mechanism or labels. We have made every effort to provide the safest possible machine, but without complete knowledge of how this machine operates, and the use of proper care by the operator, this machine can cause serous injury of death. That is why there are safety warnings throughout these instructions that cary one of these messages.

DANGER! Possible loss of life.

WARNING! Possible serious injury or machine damage.

NOTICE! Possible injury or machine damage.
We recommend that service workers from **AMF Reece** oversee the installation and initial training of your mechanics and operators. The most effective safety precaution is a well-managed safety program. Be sure those who use this machine are properly trained. Never disable safety equipment. Always wear safety goggles when operating or servicing the machine.

A - INTRODUCTION

2. SAFETY DEVICE AND LABELS

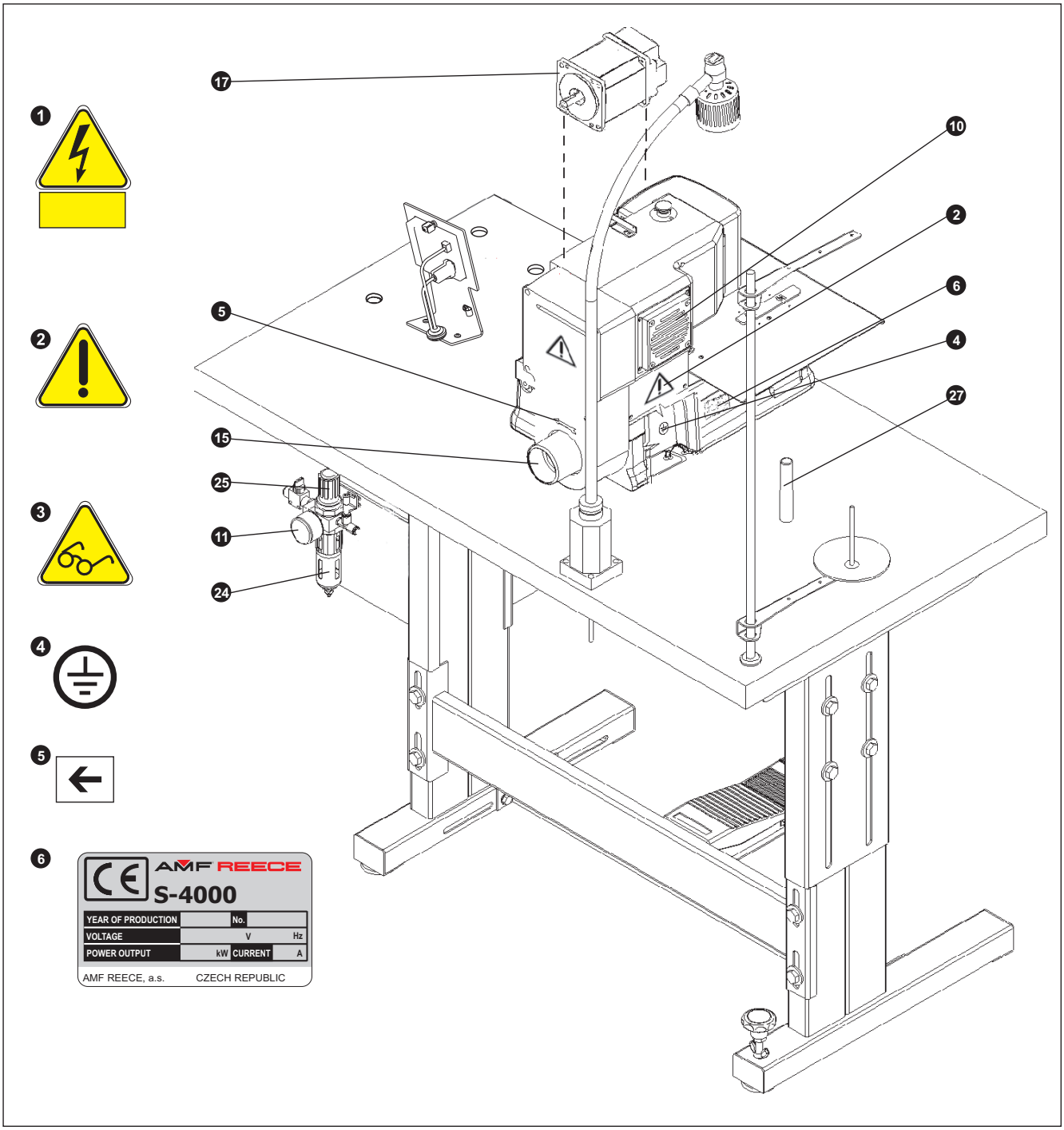

1. Electricity injury warning
2. Covers removed, possible injury
3. Wear eye protection
4. Grounding
5. Rotational direction
6. Standard label
7. Eye guard
8. Needle bar cover
9. Head cover
10. Fan cover
11. Manometer with pressure sensor
12. Machine head

Revised:12/2020
E-mail: info@amfreece-cars.cz

A - INTRODUCTION

3. GENERAL MACHINE PARTS DESCRIPTIONS

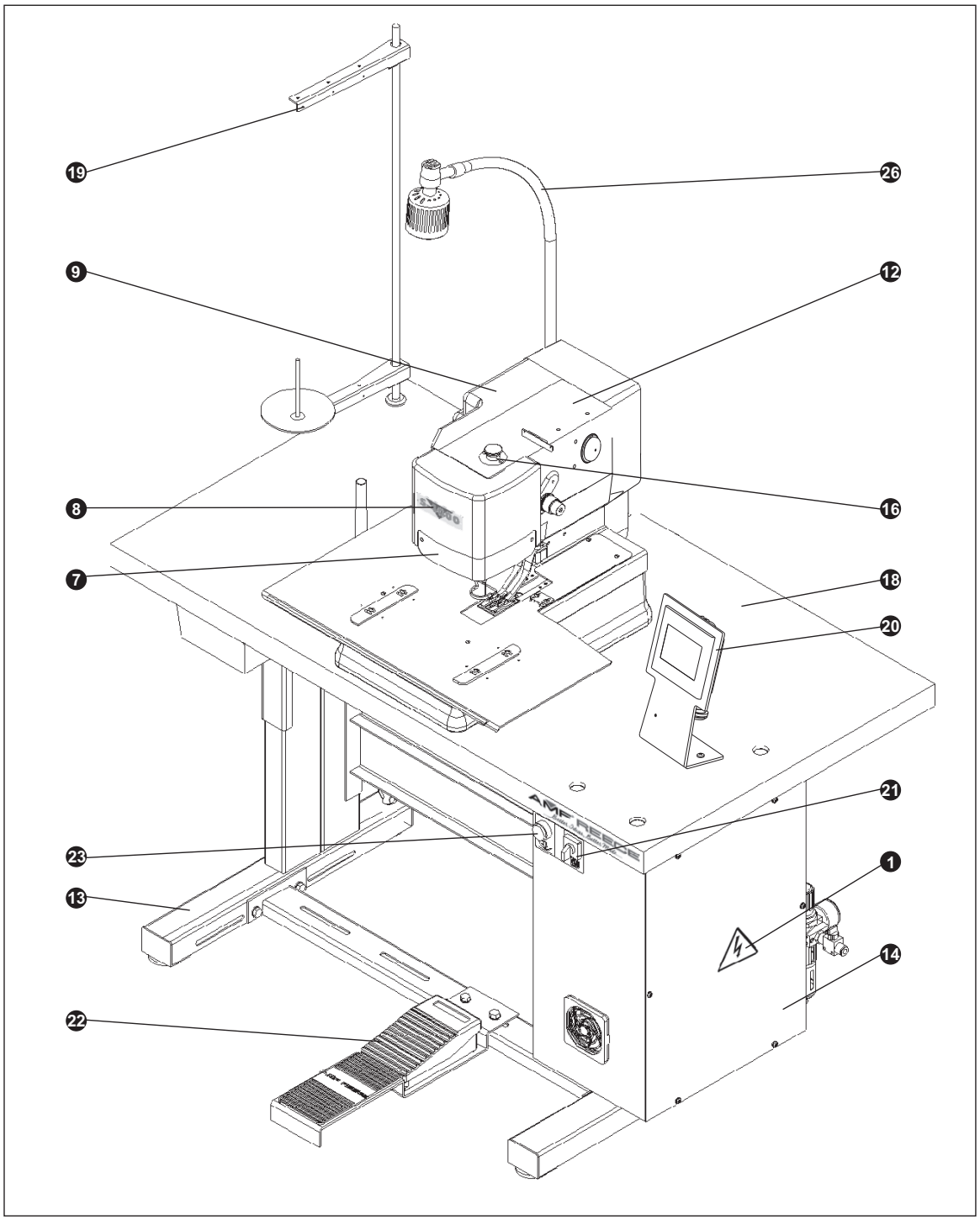

⓭ Table
⓮ Control box
⓯ Hand wheel
⓰ EMERGENCY STOP button
⓱ Motor
⓲ Table top
⓳ Thread stand
⓴ Control panel
㉑ Main switch
㉒ Foot pedal
㉓ Clamps Up / Down
㉔ Air pressure regulator
㉕ Air pressure adjustment knob
㉖ Halogen lamp
㉗ Rest pin

A - INTRODUCTION

4. SPECIFICATIONS

Machine type	S 4000 ISBH
Description	electronic controlled chain stitch straight buttonhole machine for sewing imitaion buttonholes on cuff Wiggins
Sewing speed	1500-3800 stitches/min (500 - 1900 rev/min of the drive shaft)
Buttonhole length	15.8 - 25 mm (5/8" - 1")
Stitch density	4 - 12 stitches/cm (10 - 30 spi)
Type of the buttonhole	single thread chain stitch without center cutting
Machine clamp foot height	12.7 mm (1/2")
Maximum work thickness	to 4 mm (5/32")
Bite range	1.6 - 2.3 (1/16" - 3/32")
Distance between the first and the second row of stitches	0 - 0.9 mm
Recommended thread	thread size 80, 100, 120
Needle system	Needle 750 SC 90/14 (it is possible to order 80/12)
Lubrication	semi-automatic
Operating Conditions	according to IEC 364-3, IEC 364-5-51 temperature from +5°C to 40°C, relative air humidity from 30 to 80 %
Air pressure	0.55 MPa (80 PSI)
Machine db level	Laeg = 74dB; LWA = 87dB; LpC, peak = 103dB
Machine head dimension	340 mm (height) x 470 (width) x 250 mm (length)
Machine head weight	62 kg
Table Dimension	700 mm (height) x 600 mm (width) x 1100 mm (length)
Electrical Requirements	1NPE~60Hz 230V/TN-S (according to EN 60204-1)
	1NPE~50Hz 230V/TN-S (according to EN 60204-1)
Line Circuit Breaker	10A characteristic C (according to EN 60947-2)
	16A characteristic B (according to EN 60947-2)

Revised:12/2020
E-mail: info@amfreece-cars.cz

A - INTRODUCTION

5. TABLE TYPE

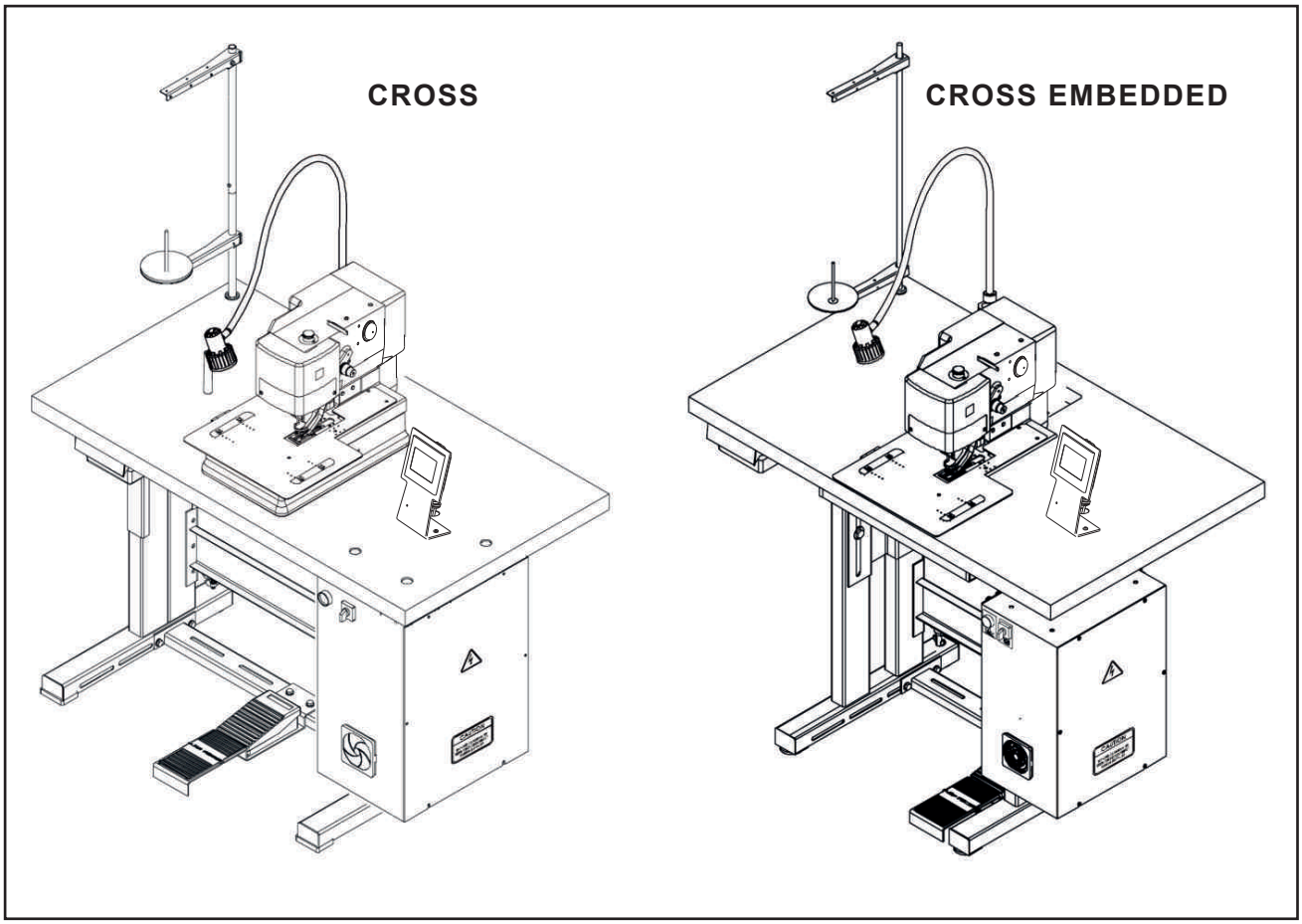

A - INTRODUCTION

6. INSTRUCTIONS FOR OPERATOR SAFETY AND MAINTENANCE

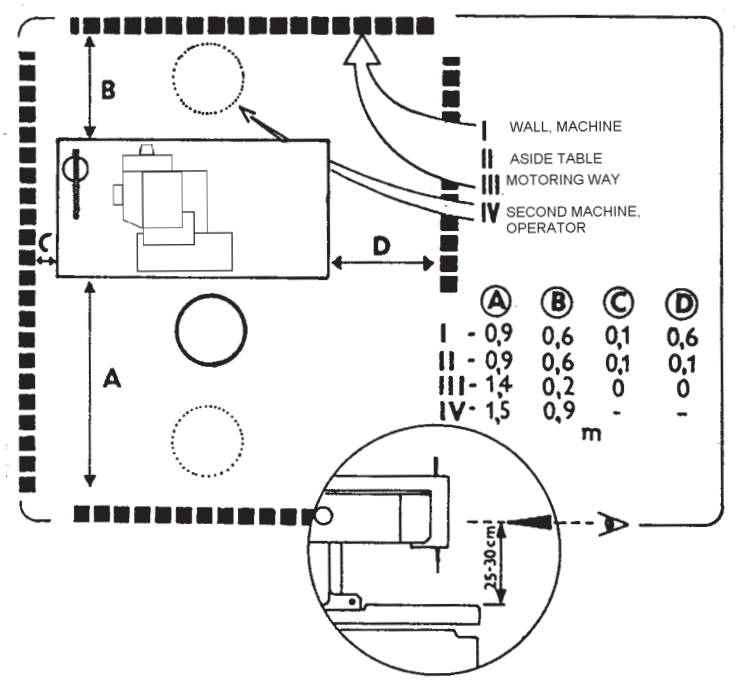

When installing the machine we recommend the minimum clearances noted above around the machine. Read all of the instructions that follow. DO NOT PUT THE MACHINE INTO OPERATION UNTIL YOU ARE COMPLETELY FAMILIAR WITH ALL INSTALLATION AND OPERATING INSTRUCTIONS.

DANGER!

- Before connecting the machine to the power supply, be positive that all safety covers are correctly installed.
- Always engage the power lockout switch, or disconnect the main power supply, before removing any safety covers.

WARNING!

- Locate the Emergency Stop button. Be sure you know how to use it.
- Be sure that you have a reliable and uniform power supply.
- Be sure that all electrical supply lines are in good condition and have no signs of damage to avoid electrical shock.
- If any covers become damaged, they must be repaired or replaced immediately.
- Do not touch moving parts of the machine while it is operating.
- Keep clear of the needle.
- Always switch off the main power before changing the needle.
- Before cleaning the machine or performing service to the machine, engage the power lock out switch or disconnect the main power supply.
- When the machine is not in use engage the power lock out switch or disconnect the main power supply.
- When this machine is used incorrectly, or is incorrectly maintained, it can be dangerous. Everyone who uses this machine, or maintains this machine, must be completely familiar with this manual.

Revised:12/2020
E-mail: info@amfreece-cars.cz

A - INTRODUCTION

CAUTION!

- Perform all regular service as described by this manual.
- If there is any problem with the power supply, turn off the main power switch.
- Do not remove, paint over, damage or in any way change safety labels. If a safety label cnot be easily read, replace it.
- Long hair and loose clothing may be dangerous near any machinery. Always contain long hair and avoid loose clothing, so that it cannot be caught by machinery and cause injury.
- Never use this machine while under the influence of drugs or alcohol.
- If anything seems to be operating incorrectly in the machine call for maintenance assistance immediately.
- Be sure that there is adequate light for safe operation. A normal minimum light level is 750 lux.

7. SPECIAL ACCESSORIES

- machine device, which is not included in the standard equipment of the machine and a customer can order it

Light

- customer can order - no. 12.0008.4.403
- connection according to chart (terminal connectors X0;cable clamps N,L)

Warning! When installing the light on the machine, disconnect the machine from the power supply.

- in case, you do not want to interfere into the machine wiring, it is possible to order the work light LBH-T65, order no. 12.0008.4.875, which contains its own clip fork the table and supply conductor with foprk (plug) CEE7 for connection to the power supply ~ 230 V.

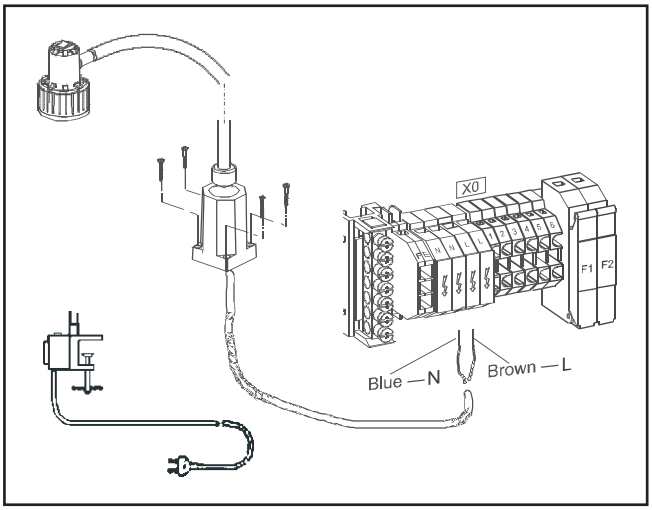

A - INTRODUCTION

Sewing cam

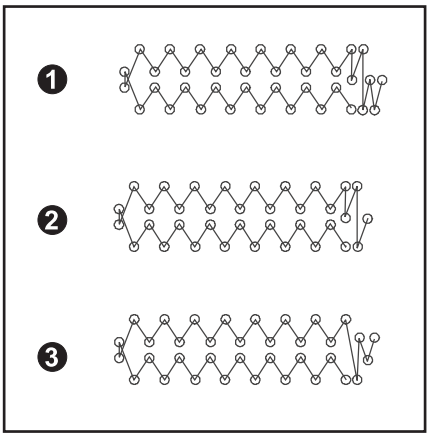

- it is possible to sew a different buttonhole shape ❶ than standard buttonhole ❷, ❸ is
- a customer can order it - ❷ part number 24.3079.0.000
  - ❸ part number 24.3080.0.000
- to change a cam - see section E20

Needles 750 SC 80/12, 70/10

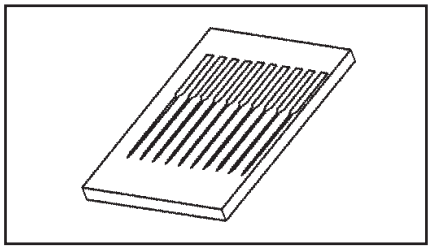

- the manufacturer recommends to use these needles when sewing the thin materials
- part number 02.0750.2.100 (80/12), 02.0750.2.109 (70/10)

Connector Ø 8 ❶

- order it if the connecting tube has the inner diameter 8 mm. The connector Ø 10 is supplied with the machine.
- part number is 12.0008.3.607

Pneumatic Adapater ❷

- order it if using 1/8“ NPT
- part number 12.0008.3.081

Hand valve ❸

- to dissipate any air from the machine, order iit (air circuit is bled). It is necessary to order the connectors (see below) to the hand valve for connection to the air tubes.
- part number 12.0008.3.463

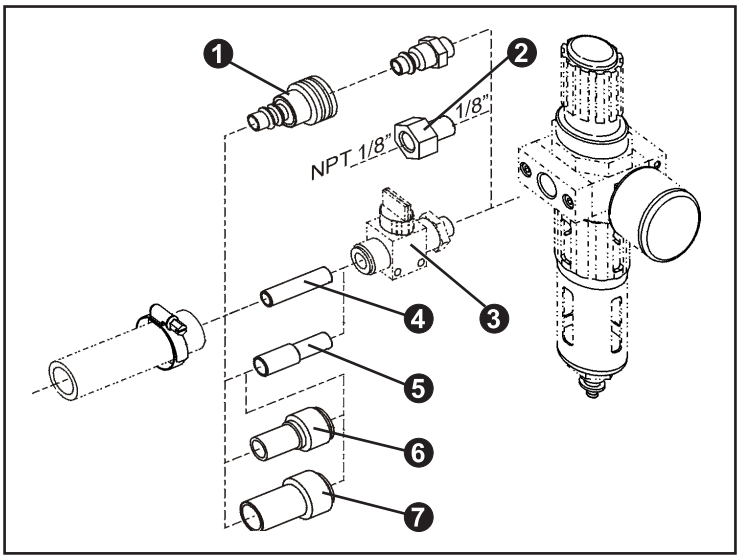

Connectors

❹ 12.0008.3.464 Ø 8 for connection to the tube with inner Ø 8 mm
❺ 12.0008.3.466 Ø 10 for connection to the tube with inner Ø 10 mm
❻ 12.0008.3.467 Ø 12 for connection to the tube with inner Ø 12 mm*
❼ 12.0008.3.465 Ø 16 for connection to the tube with inner Ø 16 mm*

* To connect the tube with inner Ø 12 and Ø 16, it is also necessary to order Ø 10

Revised:12/2020
E-mail: info@amfreece-cars.cz

B - MACHINE ASSEMBLY

1. CONTENT OF THE SHIPPING BOX

1. The shipment contains one box.
2. There is a carton with accessories, service manual with parts section and thread stand ❶ in the box.
3. During unpacking the shipment, follow the labels which are on a cover.

CAUTION: If the machine or crate was damaged in shipment inform the freight company immediately. Check the contents of the crate immediately and report any damage or missing items to the manufacturer immediately, late reports will not be considered.

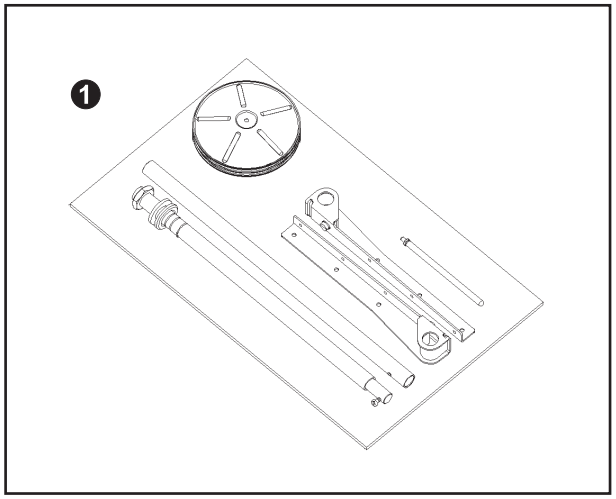

2. ACCESSORIES

A package of accessories is supplied with this machine, please refer to page **3-69** for detailed descriptions. The height of the working area is standardly set in range 830 - 850 mm from the manufacturer and for embedded table is in range 780 — 800 mm. When using this height of the working area, recommended height of the operator seat is in range 430 - 460 mm. The height of the table can be set in range 670 - 880 mm by screws ❸. Remove the shipping strap ❷ after unpacking the machine, the use of this strap is recommended anytime the machine is transported.

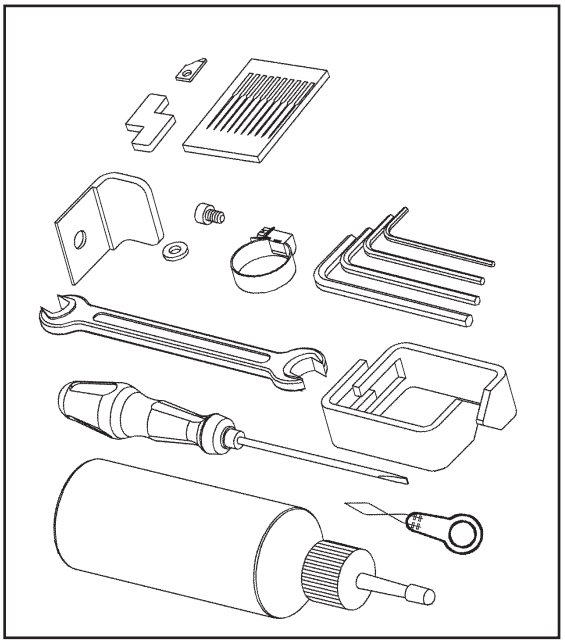

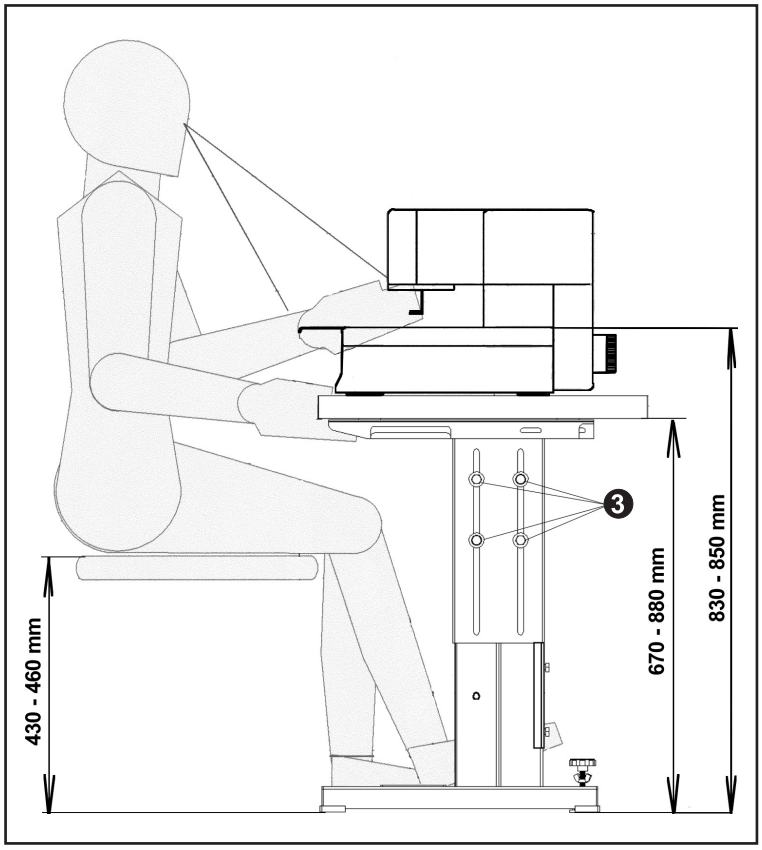

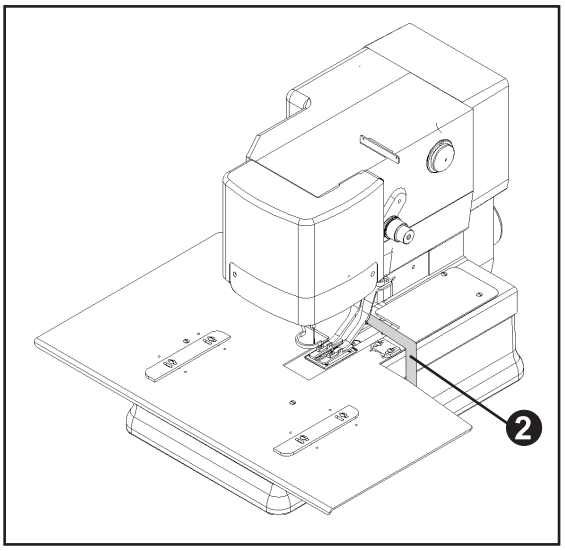

B - MACHINE ASSEMBLY

A mechanical indexer can be ordered as an extra accessory for this machine.
This simple device allows you to sew imitation buttonholes on the sleeves of the jackets.
See in Extra parts.

24.9401.0.050 – Indexer linear guide assy.	24.9402.0.050 – Connecting parts – cross lever assy.
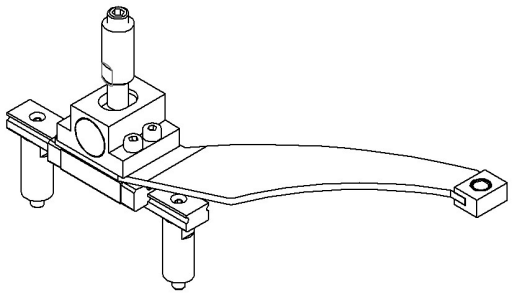	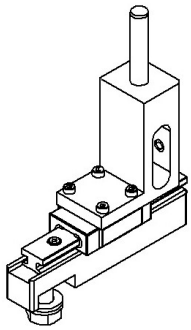

24.9403.0.050 – Connecting parts – indexer clamp. assy.	24.9404.0.050 – Indexer clamping assy.
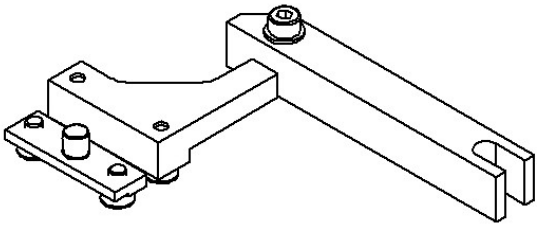	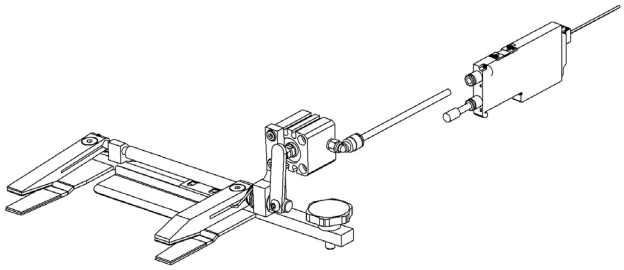

24.9405.0.050 – Indexer range mechanism assy.	24.9406.0.050 – Indexer base assy.
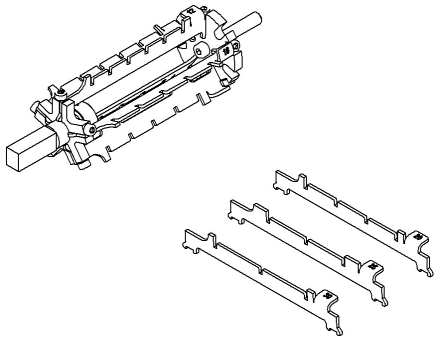	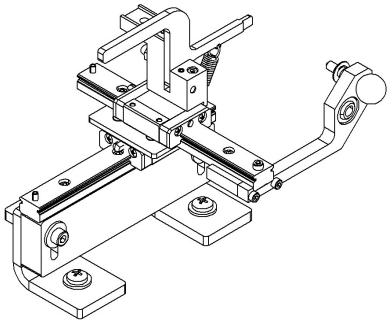

24.9407.0.050 – Mechanical indexer pedal assy.	24.3055.2.000 – Cover plate
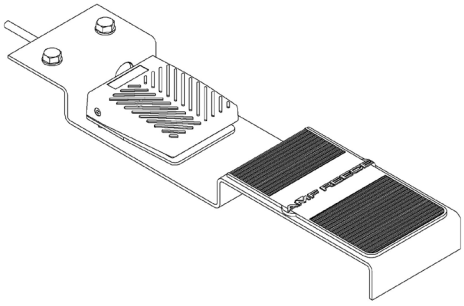	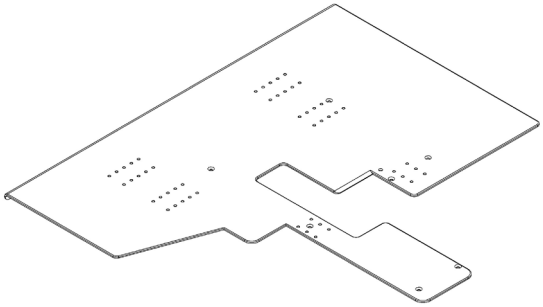

Revised:12/2020
E-mail: info@amfreece-cars.cz

B - MACHINE ASSEMBLY

3. POWER AND AIR CONNECTION

1. The machine is equipped with a quick coupler ❹ required with connector ❺ for inner Ø of the tube 10. The connector for inner Ø of the tube 8 is not supplied with the machine, a customer has to order it. The manufacturer recommends to use connector ❻ for customers who requires to connect the tube with connector NPT. If a customer needs to use a shut off valve ❶, which allows fast releasing of the air from the circuit, he must order it. A variety of connectors ❷ can be used separately or in combination to adapt to the available input supply hose. It depends on type of the tube which is used by a customer. These connectors are not included in the accessories. A tubing clamp ❸ is provided.

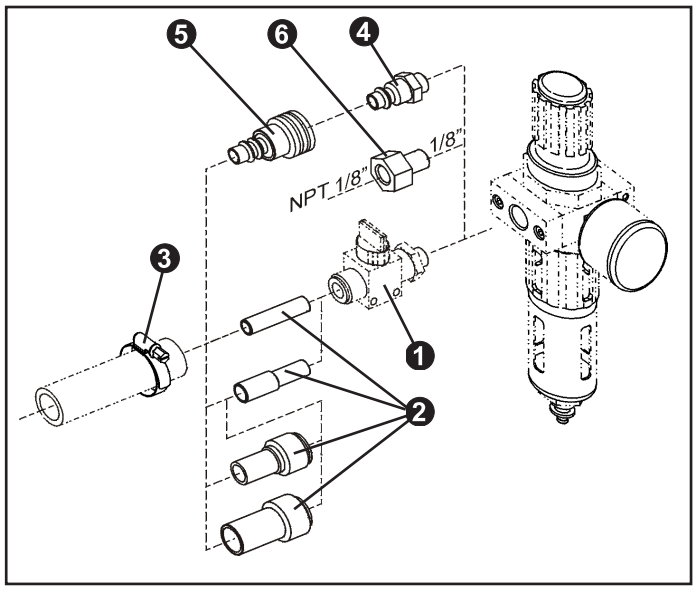

NOTE: Parts ❶, ❷, ❺, ❻ are included in **Extra Parts**.

2 . After air connection check the set air pressure on the dial of the regulator. It should be in range 0.5 - 0.6 MPa. The green pointer ❼ indicates the lowest working air pressure 0.5 MPa, which is set from the manufacturer on the regulator ❽. If the air pressure is lower than 0.5 Mpa after connecting the machine to the power supply „Low Pressure“ message appears on the control panel display. To adjust the working pressure, loosen the regulator cap lock ❿ and turn the regulator cap clockwise to increase the pressure. Push the regulator cap ❿ down.

3. Power supply must be 208 to 230 volts 1 phase, 50 or 60 Hertz. Receptacle plug must meet requirements of IEC standard 364-4-41, its circuit breaker must be minimal 10A with characteristic C according to the EN 60947-2 (or 16A with characteristic B). No other devices must not be connected to the circuit breaker of the socker. The hand wheel ⓬ must turn counter clockwise. The machine is equipped with a filters which contain capacitors which generate an high frequency leakage current. In order to prevent nuisance tripping, residual current protection device must be protected against these high frequency currents: this is the case for industrial residual current device (example „S“ type).

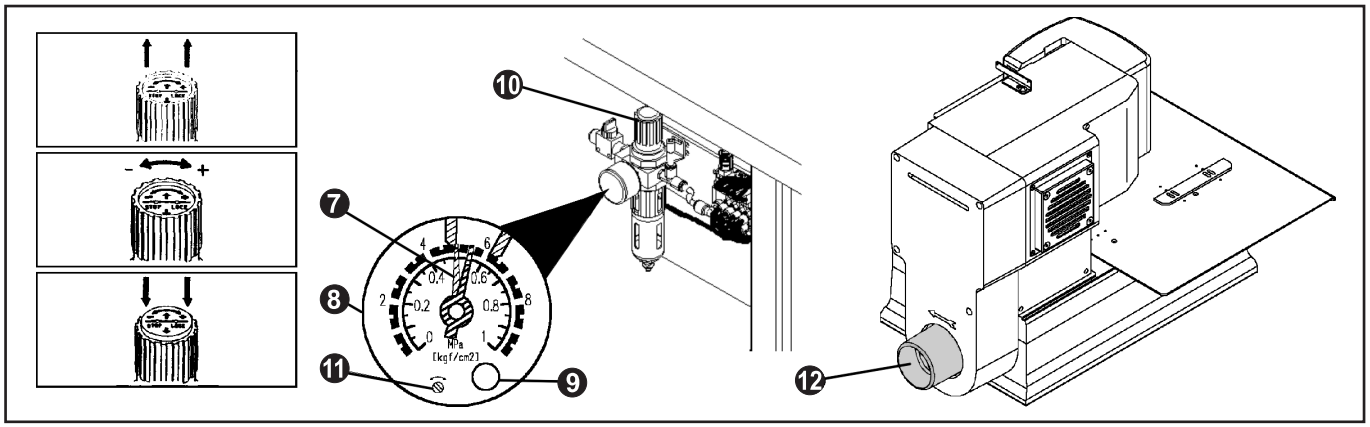

B - MACHINE ASSEMBLY

4. HEAD PNEUMATIC

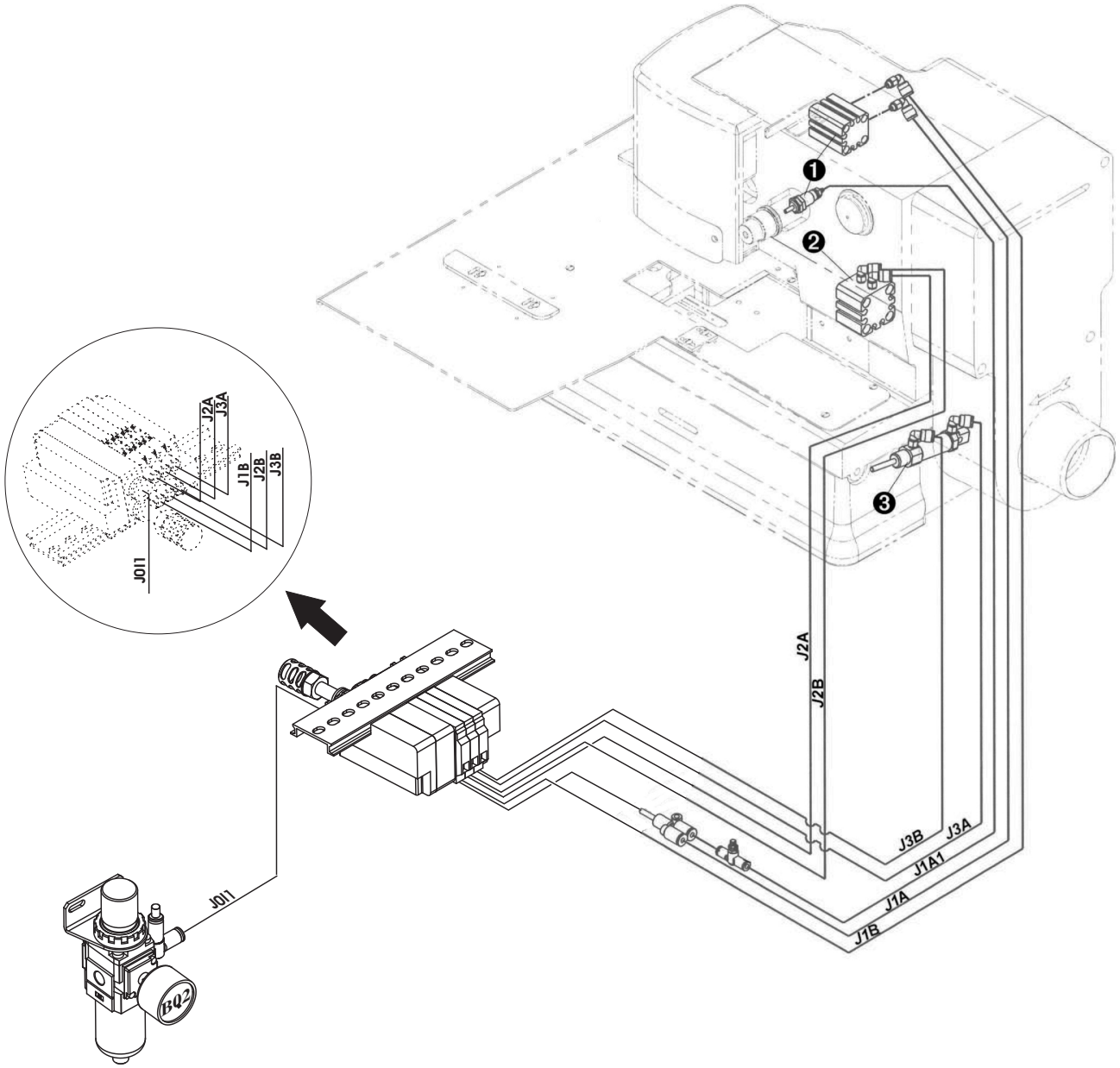

❶ - thread draw-off, tension release
❷ - clamp feet
❸ - thread trim
J0I1 - air input
BQ2 - regulator with air pressure switch

Tubes identification

J X X X
- air distribution
- 0, 1, 2 — X => distribution from a regulator
- 0, 1, 2 — X pneumatic cylinder identification (first number is 0 but is not marked)
- A ; B; C

Revised:12/2020
E-mail: info@amfreece-cars.cz

B - MACHINE ASSEMBLY

5. THREAD STAND INSTALLATION

1. Put the thread stand together according to the drawing.
2. Position of the locking ring ❶ allows assembly of the thread stand for various thickness of the table top. Threaded end of the post ❻ must not extend more that 1 mm (1/32) through the locking nut ❺.
3. Insert the washer ❷ and the post into the hole provided in the right rear of the table top ❸. Insert the washer ❹ and tighten the nut ❺.

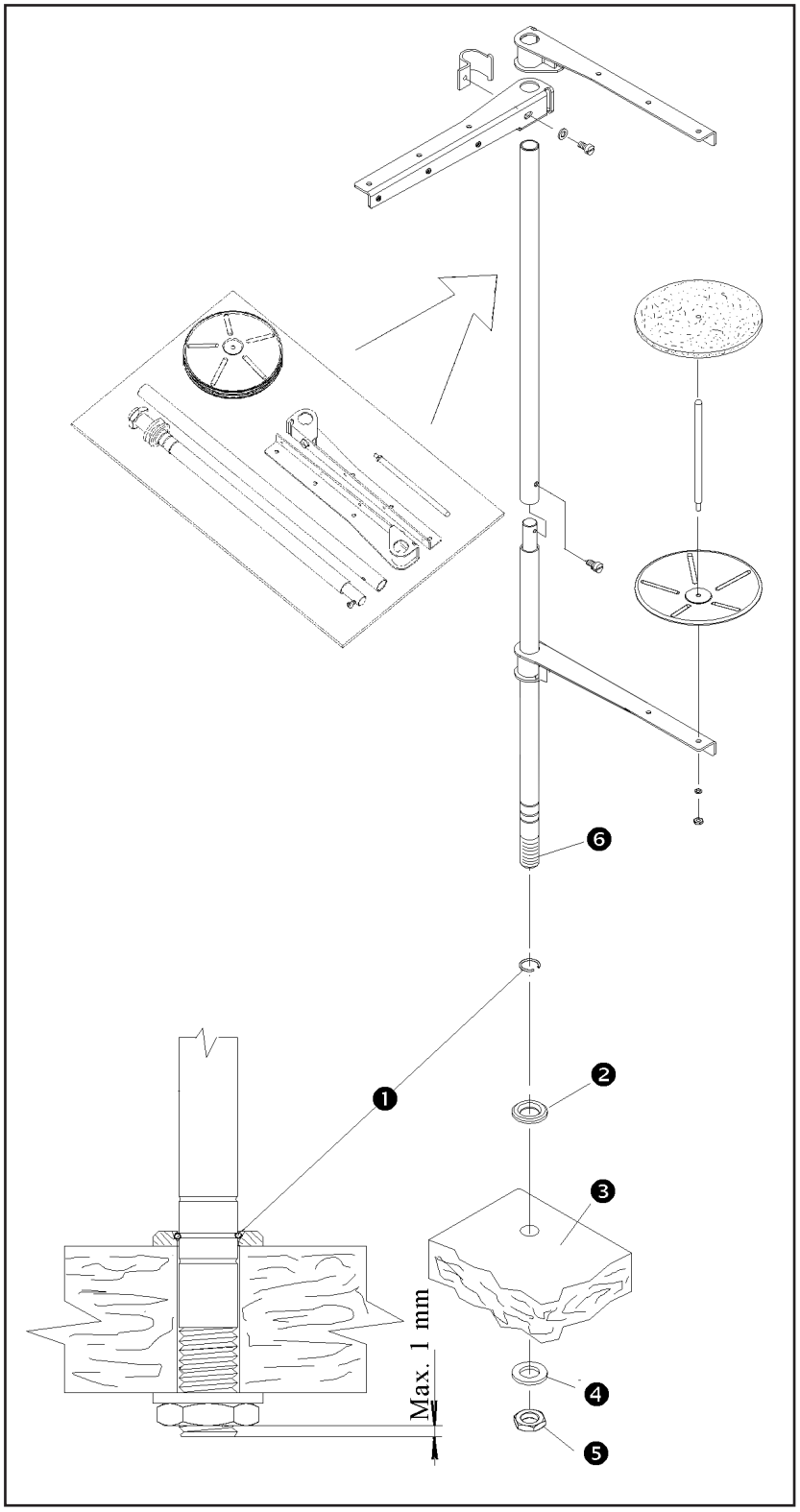

C - PROPER APPLICATION

1. POWER UP / HOME POSITION

1. Turn the main power switch on ❶ by turning clockwise to the I position.
2. The machine is ready for operation when the control panel display lights, the Ready message appears on the display and the green LED lights on display. Ready The machine must be in the home position before starting to sew (to be certain, press the foot pedal and sew one dummy buttonhole).
3. It is possible to instal power voltage control (Voltage monitoring relay HRN 35) in to the machine control system. This power voltage control cautions a machine operator if the supply voltage is not in the required range (185V - 255V) and the machine could be damaged - see section E19.

Note: The power voltage guard is installed in the machine only if a customer has ordered it with a machine.

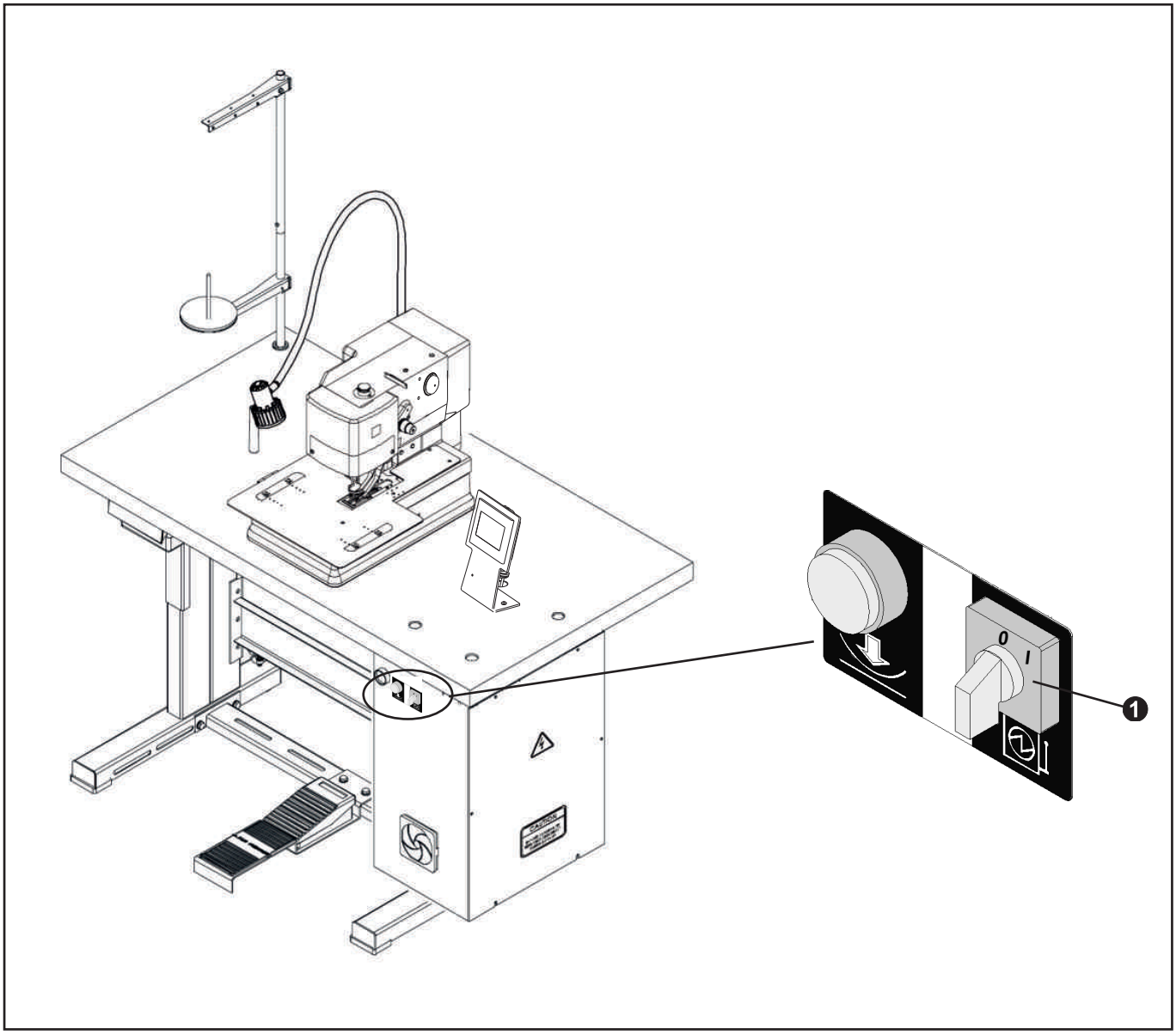

Revised:12/2020
E-mail: info@amfreece-cars.cz

C - PROPER APPLICATION

2. NEEDLE INSTALLATION

WARNING! Before performing this adjustment, switch the main machine power off to prevent accidental starting of the machine. Disconnect the air supply and dissipate any stored energy. Use needles ordering number 02.0750.2.110 (750SC 90/14) only - see accessories. It is also possible to use needles ordering number 02.0750.2.100 (750 SC 80/12) for sewing the thin materials - these needles are not included in the standard machine equipment.

1. Using the screwdriver push the latch ❶ and open the needle bar cover ❷. ***Note***: The accessories contain the lever ❺ (ordering number 22.0213.0.000) and screw (ordering number 08.6000.4.005) with washer (08.6850.4.000) ❻, which is possible to fit to the latch. It allows opening of the cover without using the tool.
2. Loosen the screw ❸ and remove the needle.
3. Insert the new needle so that the long thread groove ❹ is in the rear and the spot for the clamping screw ❸ is in line. Do not install a bent or broken needle. Roll the needle on a flat surface to check for straightness.
4. Tighten the screw ❸ well.

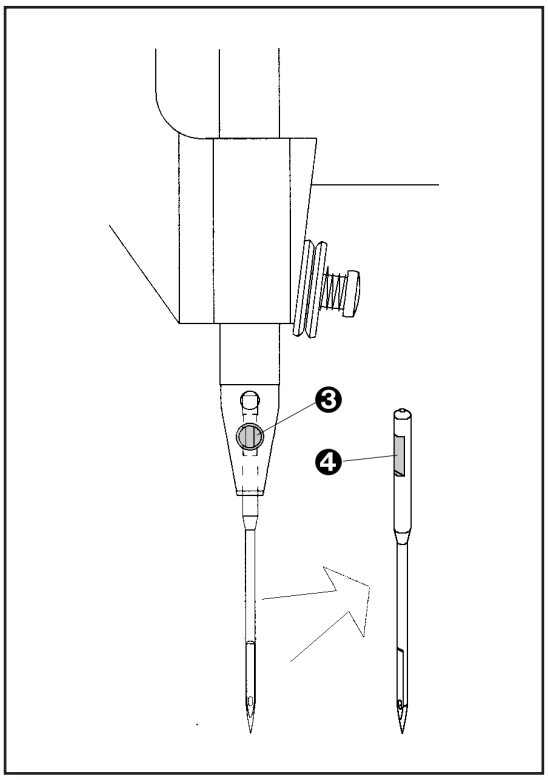

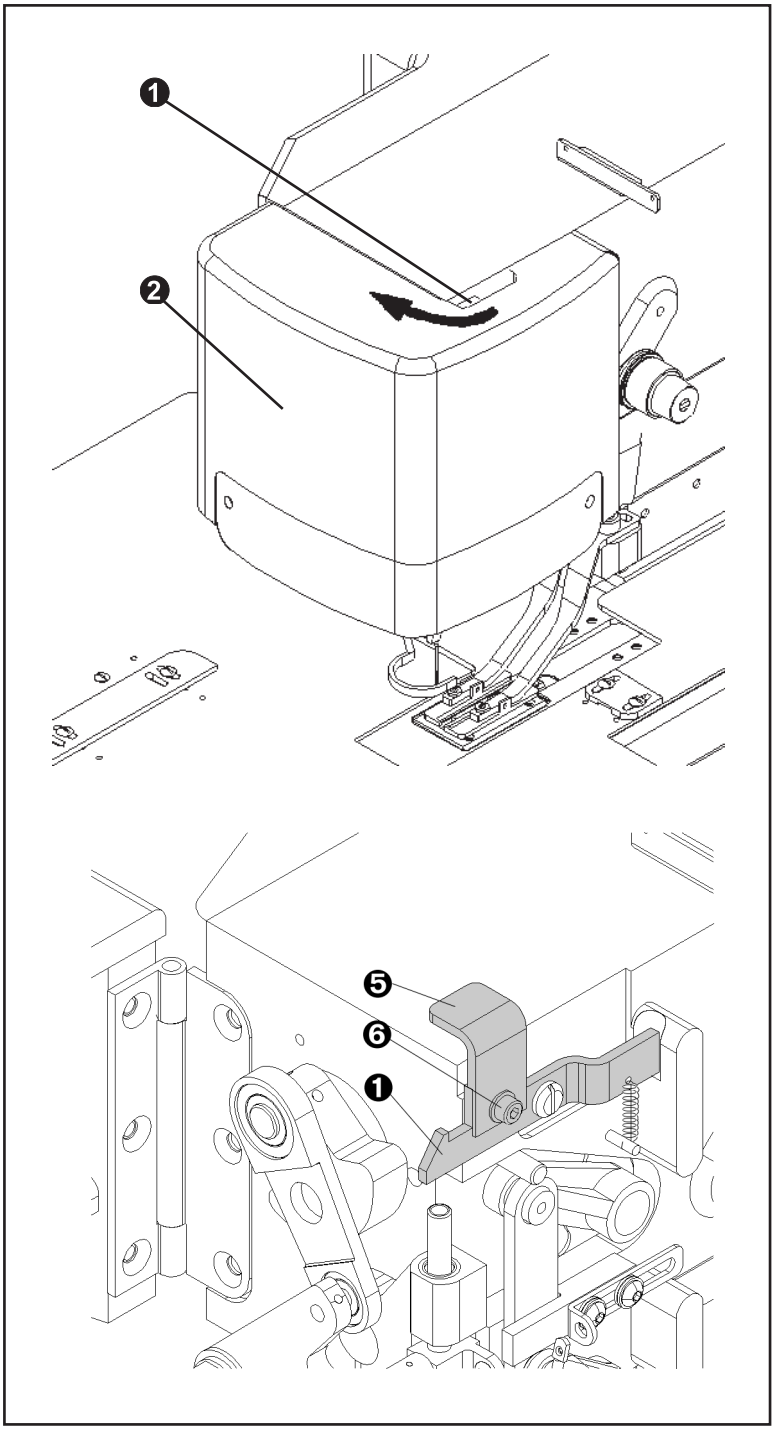

C - PROPER APPLICATION

3. THREADING

WARNING! Switch the main machine power off to prevent accidental starting of the machine Disconnect the air supply and dissipate any stored energy. When threading, see the pictures below. Change the thread tension by nut ❶ according to the sewing conditions. To increase the thread draw off (for example sewing on the thin fabrics) there is an arm ❷ installed on the thread draw off lever.

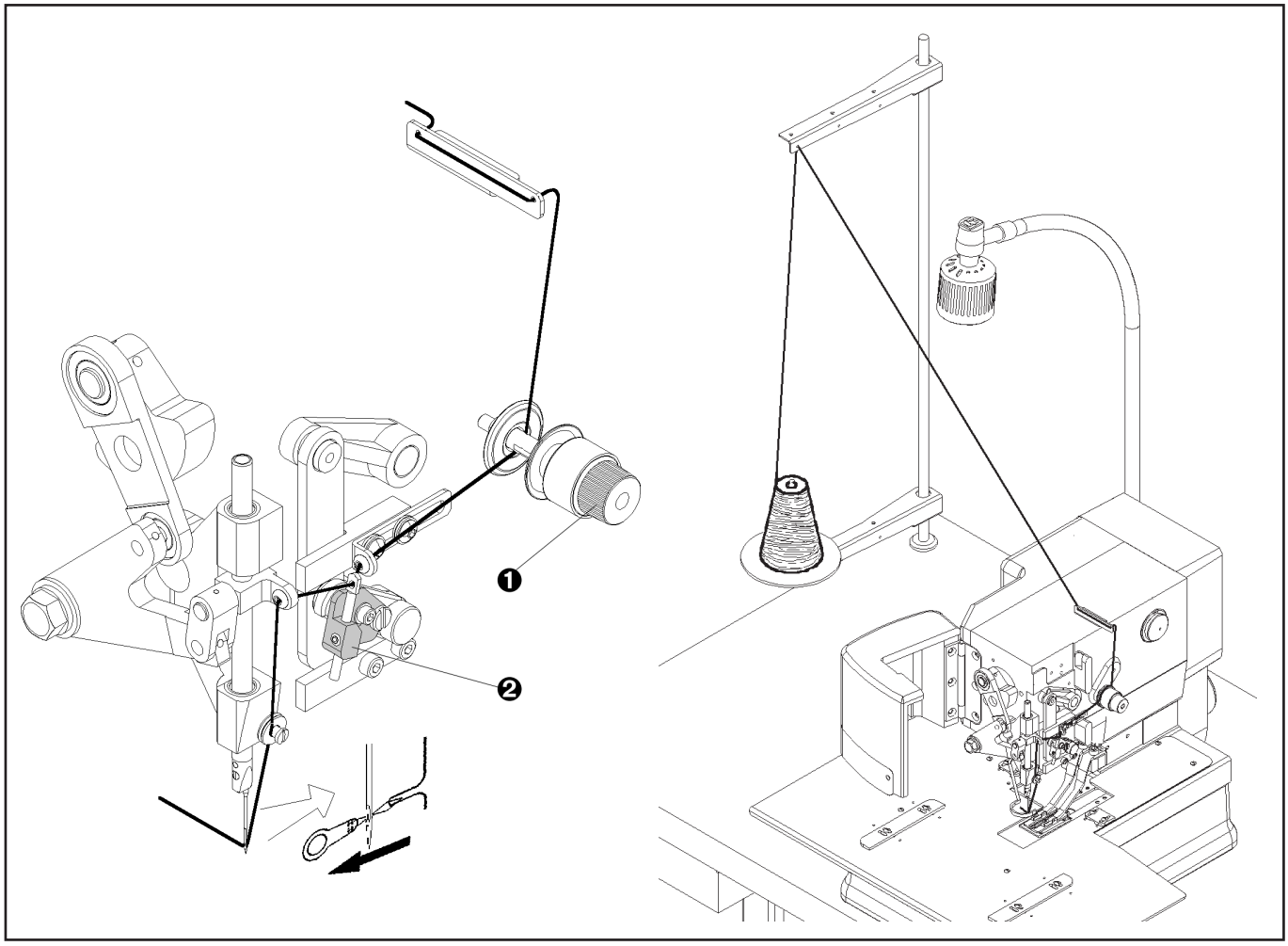

The appearance and quality of the buttonhole may be affected by one or more of the following:

- clamping of the material
- bartack quality
- thread tension
- type of thread (size, etc.)
- sewing width
- sewn material (thickness, density)

Revised:12/2020
E-mail: info@amfreece-cars.cz

D - MACHINE CONTROLS

1. PROGRESS OF SEWING

1. Bring the machine to the home position according to the section C1.

2. Be certain that the machine is threaded correctly according to the section C3 and insert the work under the clamp feet.

3. When the foot pedal ❶ is pressed to the first position, the work is clamped by the clamp feet.
(Releasing the foot pedal will rise the clamp feet).

Note: It is possible to set in the program the machine start on first pedal position.

4. When the foot pedal is pressed to its second position, the sewing is started. After finishing the sewing and trimming the thread, the machine returns to the home position and the clamp feet rise.

5. When the clamp feet are up, it is possible to move the sewn work for next sewing.

6. Machine can be stopped in any place of the cycle by pressing the Emergency Stop button ❷ which is placed on the machine head. After releasing the Emergency Stop button, pressing the button and pressing the foot pedal, the machine finishes the sewing.

7. If the foot pedal ❶ is pressed before finishing the sewing, the clamp feet will not rise and the machine will sew four cycles instead of two - this is possible to set in program.

8. When the work is done, switch the machine off by the ❸ button.

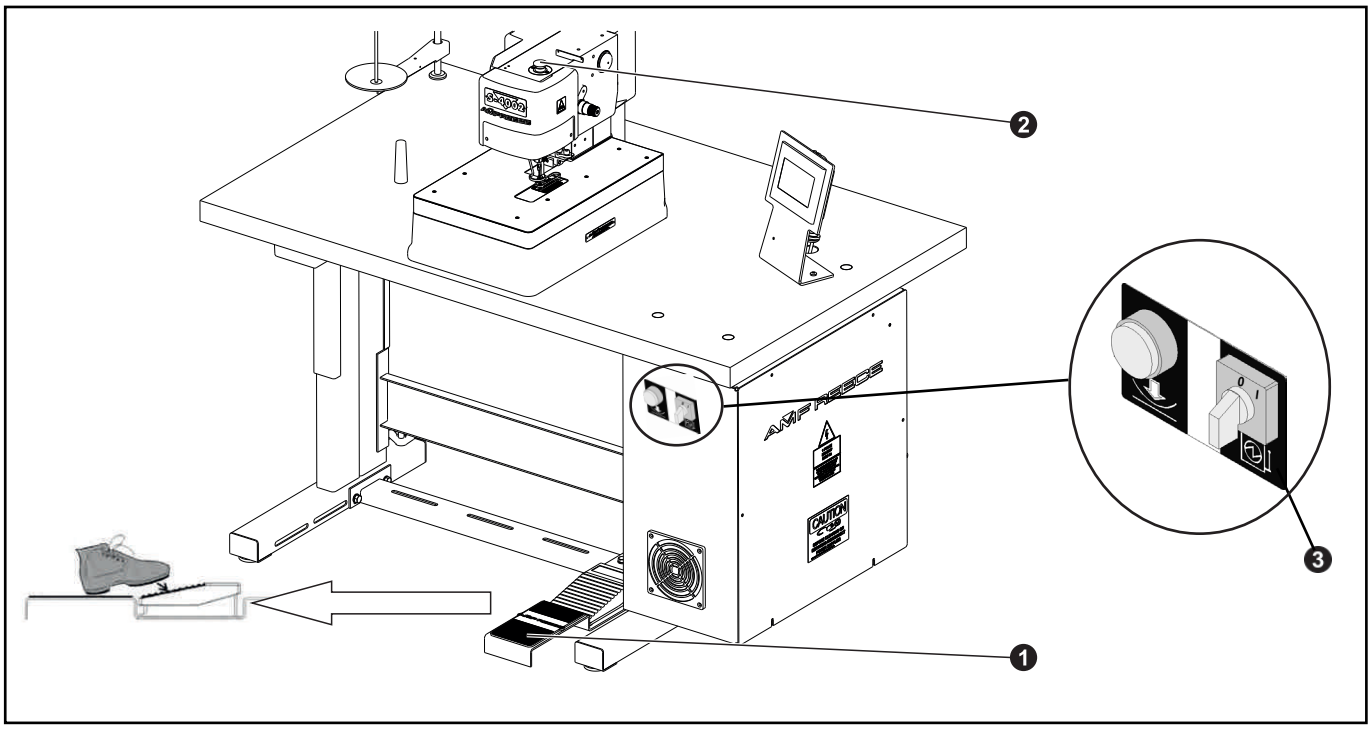

D - MACHINE CONTROLS

2. OPERATOR CONTROL PANEL PUSH BUTTONS AND SWITCHES

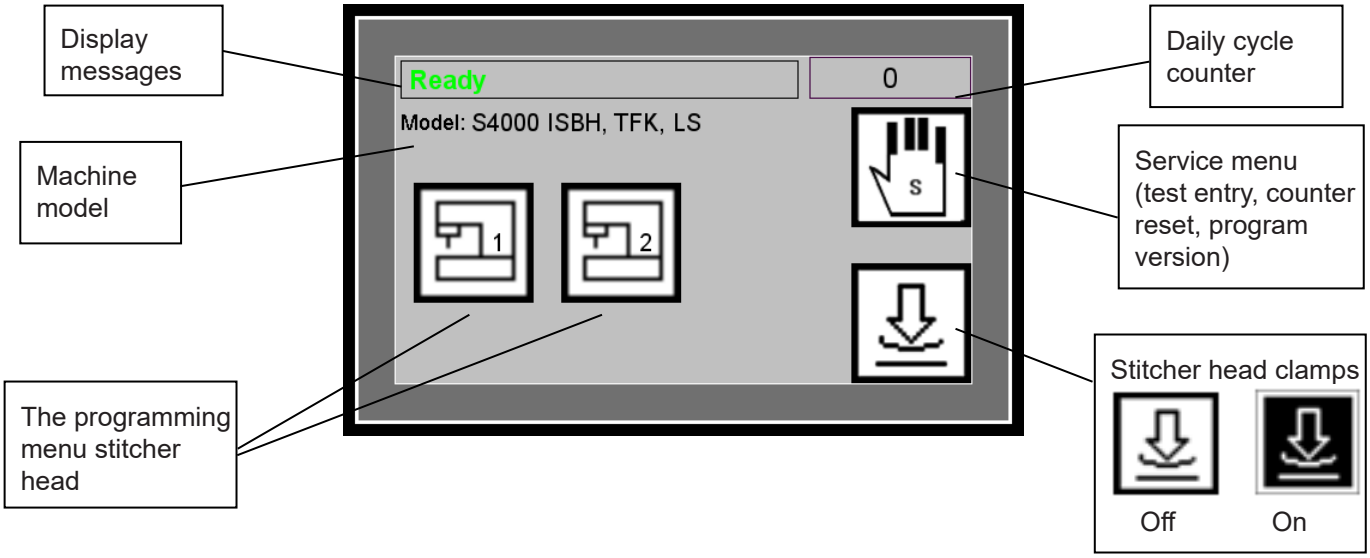

Display messages:

Standard messages:
- Ready
- Emergency stop
- Wait please
- Busy

Error messages:
- Motor not ready
- Low air pressure
- Low voltage

ATTENTION!
When doing any kind of adjustment, keep your hands off the needle area. The basic machine design is equipped with a pedal control; therefore never place your foot onto the foot pedal.

Error messages on the display are mentioned in *Troubleshooting* section.

Error setting

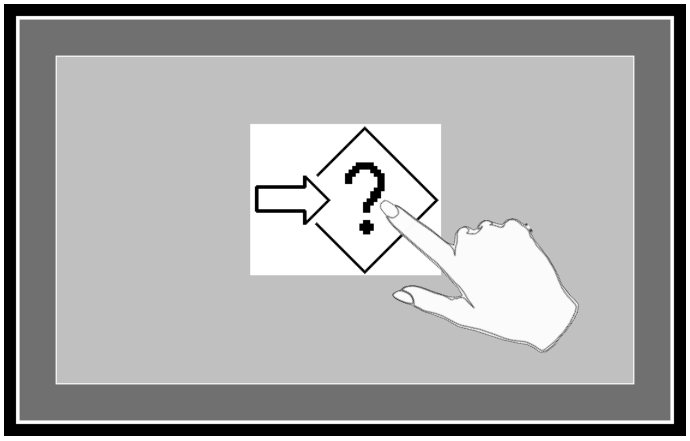

It will display if the value of the parameter is adjusted out of range.

Press the screen on the display, you will return on the main screen

Revised:12/2020
E-mail: info@amfreece-cars.cz

D - MACHINE CONTROLS

3. THE PROGRAMING MENU STITCHING HEAD

Enter the sewing head program menu by pressing button 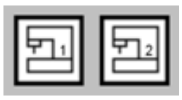

Parameters set 1

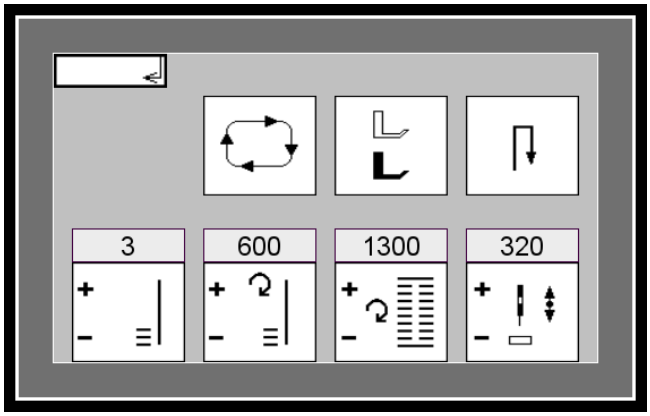

Parameters set 2

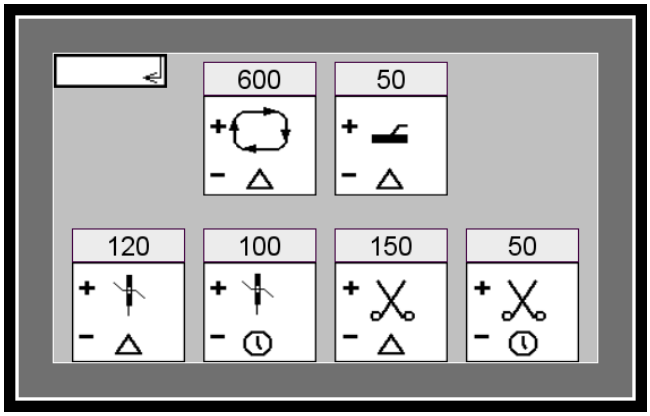

D - MACHINE CONTROLS

Setting the machine cycling. (On/Off).
If the button is backlit, the function is active.

Setting the foot pedal position. (Possible setting 1step/2steps).
Adjustment for position 1 means, that the machine closes clamps and starts sewing in one moment.

Adjustment for position 2 means, that the machine closes clamps on 1 position and on position 2 starts the sewing cycle.

Setting the number of buttonhole sewing
(It is possible to set 1 sewing/2 sewings/1 or 2 sewings)

Setting 1 sewing

Setting 2 sewings

Setting 1 or 2 sewings.
If you press the foot pedal and keep it pressed down after sewing 1 buttonhole, the buttonhole will be sewn again.
If you press the foot pedal only at the start of sewing and release it, a buttonhole will be sewn by 1 sewing.

Setting the number of stitches in slow speed at the beginning.
(it is possible to set 0 – 3 rpm)

Setting the slow start speed at the start of sewing cycle.
(Range 500 - 1000 rpm)

Setting the maximum sewing speed.
(Range 1000 - 3840 ppm)

Setting correction of the needle bar upper position. (Range 0 - 600 imp)

Setting the delay between the button hole sewing cycles. (Range 500 - 2500 ms)

Clamp feet opening delay adjustment, at the end of cycle. (Range 0 - 100 ms)

Thread Draw-off delay.
(Range 60 - 135 ms)

Thread Draw-off time.
(Range 30 - 200 ms)

Setting the trim delay.
(Range 0 - 200 ms)

Setting the trim timing activation.
(Range 30 - 60 ms)

To return to the main screen, press ↵ key.

Revised:12/2020
E-mail: info@amfreece-cars.cz

D - MACHINE CONTROLS

4. TESTS

W a r n i n g !!! The tests can be carried out by qualified service men only.

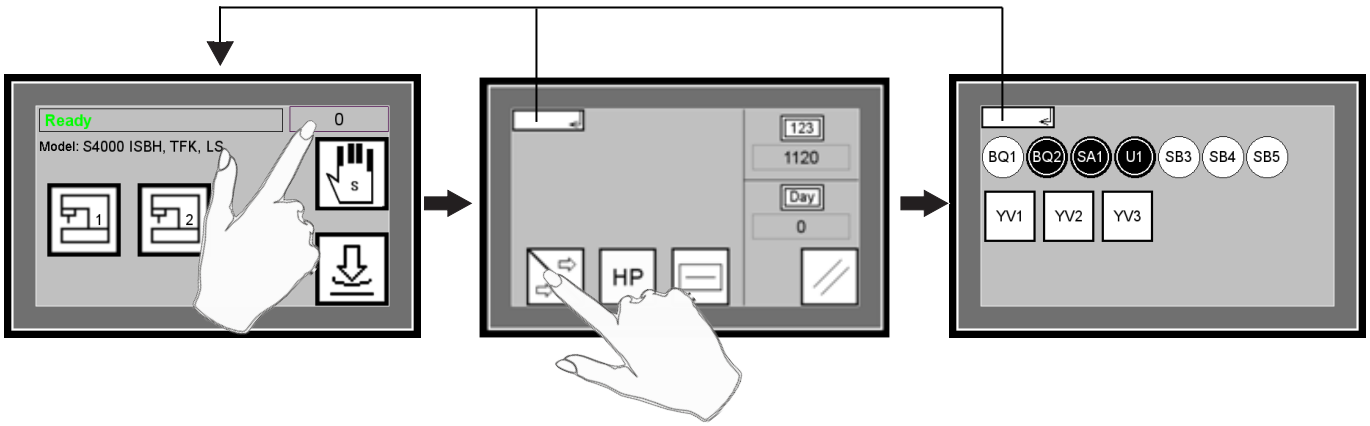

Inputs

BQ1 – The end position sensor BQ1. The symbol signalizes correct function of the sensor of the end position of the cam (HOME) BQ1.
Activate the sensor using a metal tool and the button turns black.

BQ2 – The symbol signalizes the correct function of the air pressure button BQ2.
If the air pressure is less than 0,5 MPa the button is under lighted.

SA1 – The symbol signalizes the correct function of the emergency button SA1.
After pressing button key EMERGENCY STOP the button is under lighted.

U1 – The symbol signalize the correct function of the servodriver.
If the servodriver is in operation, the button is underlighted.

SB3 – The sewing head clamps button.
When pressing the clamps button on the machine or in the main menu, the symbol turns black.

SB4 – The symbol signalizes the correct function of the first position button of the pedal SB4.
When the foot pedal is pressed to its first position the button SB4 is underlighted.

SB5 – The symbol signalizes the correct function of the second position button of the pedal.
When the foot pedal is pressed to its second position the button SB5 turns black.

Outputs

YV1 – The button is used to activate the YV1 valve of the draw-off lever. The cutting lever goes down.

YV2 – This button is used to activate YV2 valve of the clamping. The clamps are pressed onto the fabric.

YV3 – The button is used to activate the YV3 valve of the thread trimming.

D - MACHINE CONTROLS

5. PROGRAM VERSION

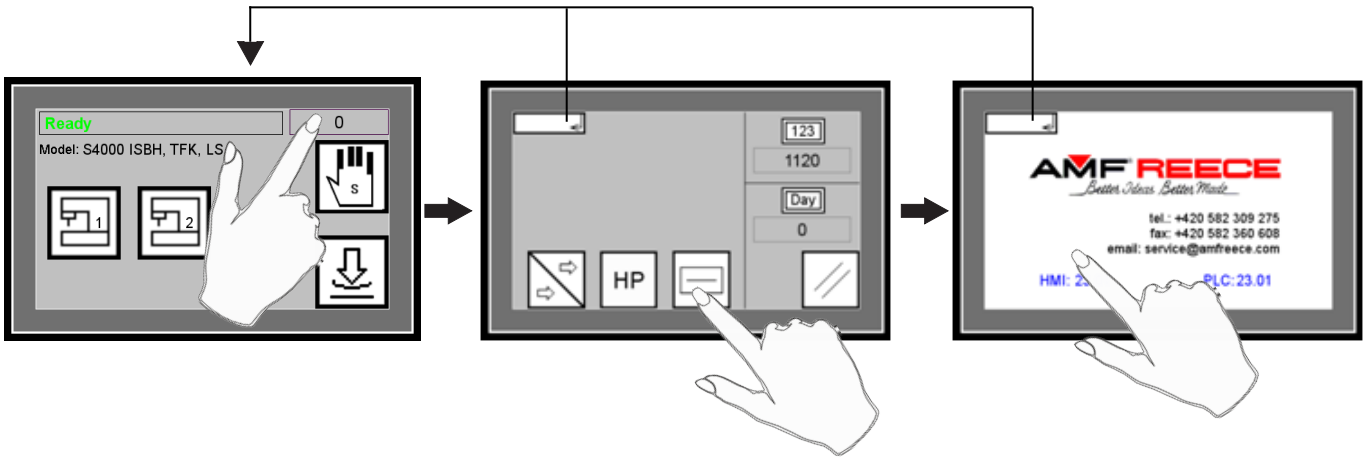

6. COUNTER RESET

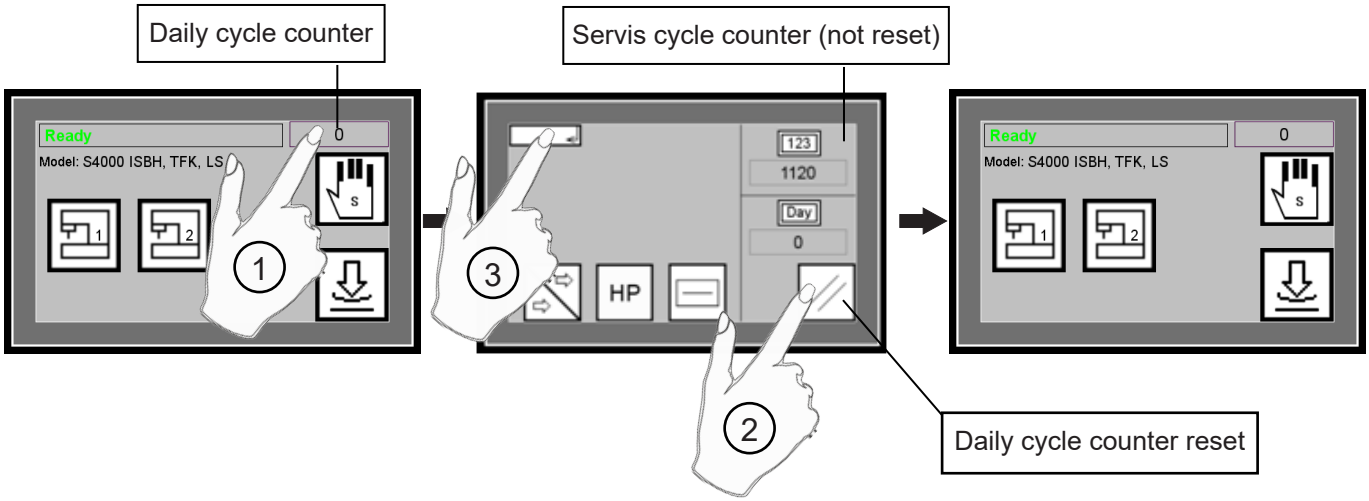

D - MACHINE CONTROLS

7. PARAMETER CHECKLIST

PARAMETER	RANGE	SETTING
	Off / On	Off
	1 step / 2 steps	2 steps
	1 repeat / ½ repeat / 2 repeat	1 repeat
	0 - 3	0
	500 - 1000 rpm	1000
	1000 - 3840 rpm	3500
	0 - 600 ipm	320
	500 - 2500 ms	500
	0 - 100 ms	50
	60 - 135 ms	
	30 - 200 ms	
	145 - 200 ms	
	30 - 60 ms	

E - MACHINE ADJUSTMENTS

1. MACHINE HOME POSITION

1. The needle bar is in the upper position. The needle ❶ descends to the right side of the throat plate slot ❷ during the first stitch. The marks ❽ on the handwheel and cover casting are aligned.
2. The clamp plate ❸ with clamp feet ❹ is in the full forward position against the adjustable stop ❺ . The clamp plate moves to the rear during the first row of stitching.

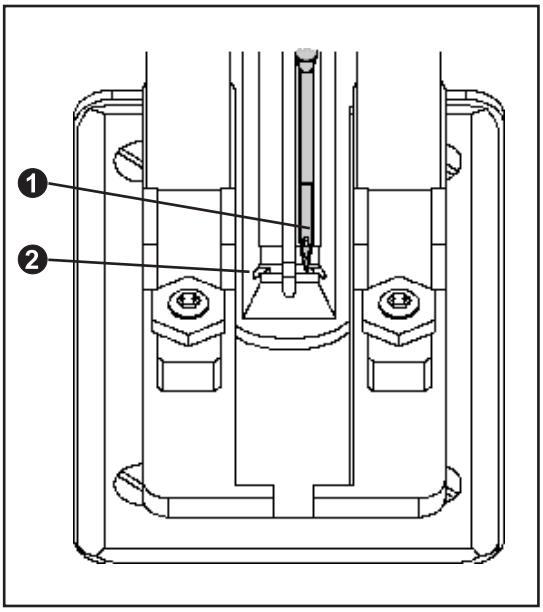

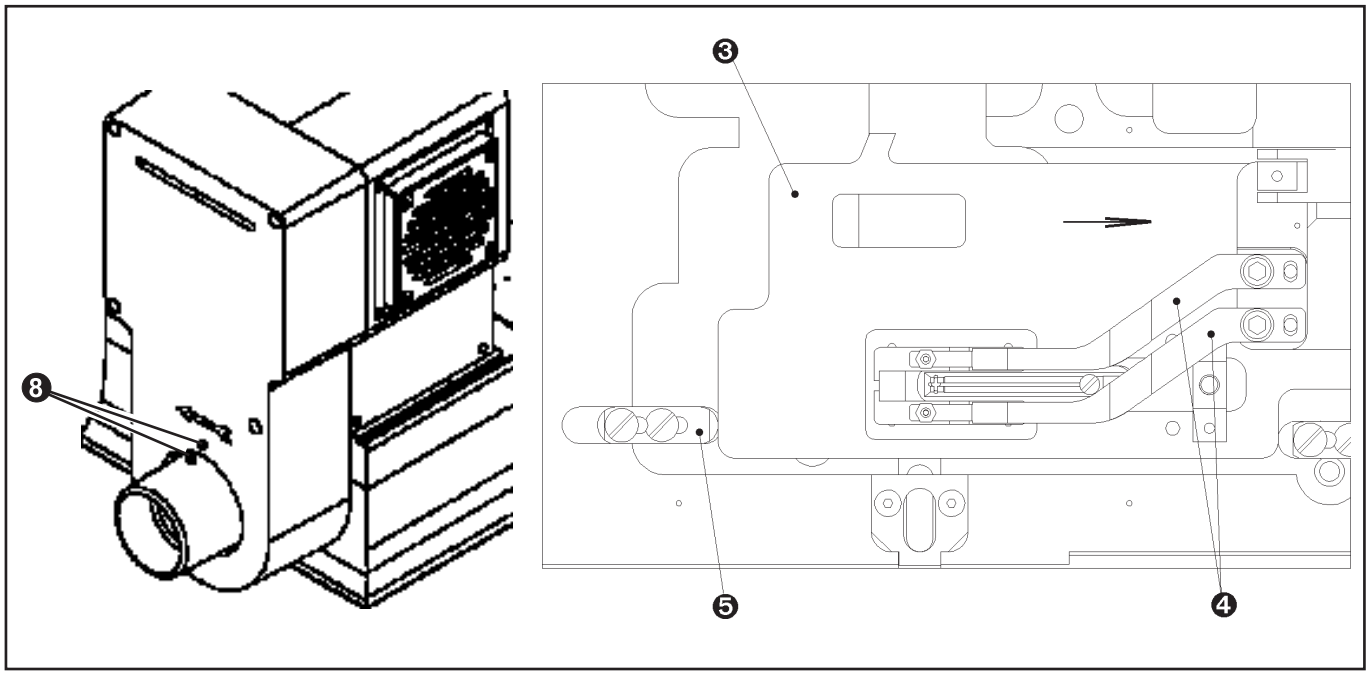

Revised:12/2020
E-mail: info@amfreece-cars.cz

E - MACHINE ADJUSTMENTS

2. MAIN CAM ADJUSTMENT

1. Bring the machine to the home position.
2. Tilt the machine on the rest pin and view the main cam assembly. The distance between the control spring ❻ and the right shifter block ❼ is 2 mm.
3. If incorrect - see section **E9**, point 1.

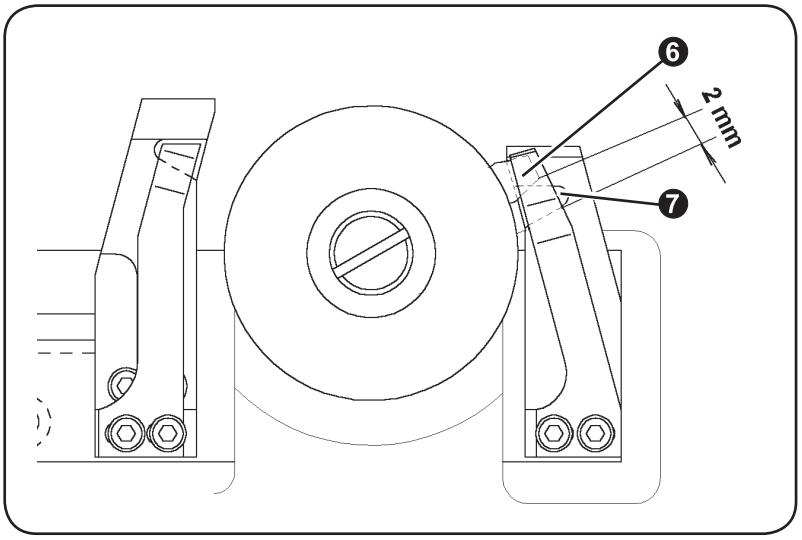

3. THE PRINCIPLES FOR THE MACHINE ADJUSTMENT

1. Before starting doing adjustments switch the machine into the service mode by pressing the emergency stop button ❶ on the machine head and releasing it again. Press the button ❷ on the control panel afterwards. ”Service mode” message appears on the display ❸.

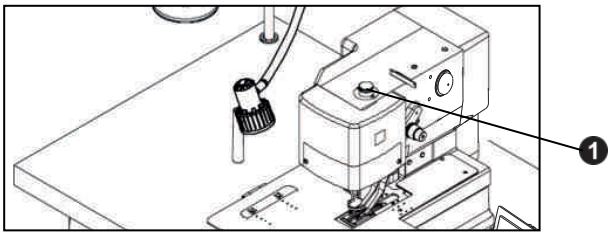

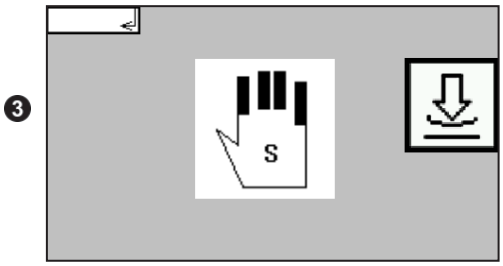

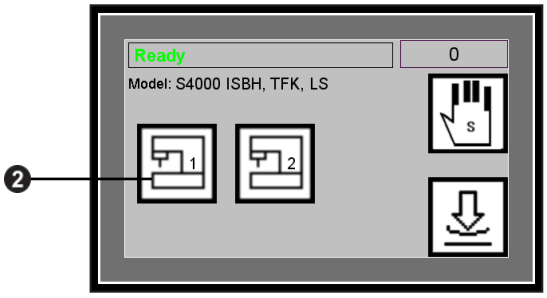

WARNING! THE MACHINE CANNOT START OPERATION BY PRESSING THE FOOT PEDAL IN THE SERVICE MODE!

2. Press button to go back onto the main screen.

E - MACHINE ADJUSTMENTS

4. NEEDLE BAR

1. Needle bar crank position

Turn the handwheel ❺ and loosen the screw ❶in the needle bar crank ❷. Turn the handwheel until the needle bar reaches the upper position. Pulley screw ❸ on the main shaft should be in the same line with screw ❹. Tighten the screw ❶.

NOTE: The needle bar should be in the top dead center position when the screw ❸ is at 12 o‘clock. To check, turn the handwheel clockwise and counter clockwise. The needle bar must move downward in either direction. The needle ❿ makes its first stroke into the right side of the throat plate.

2. The needle bar height adjustment

Adjust the needle bar ❻ height to 16 mm (5/8“) from the surface of the throat plate ❼ to the lower edge of the needle eye. Use height gauge ❾. Loosen the set screw ❽ and move the needle bar up or down as necessary.

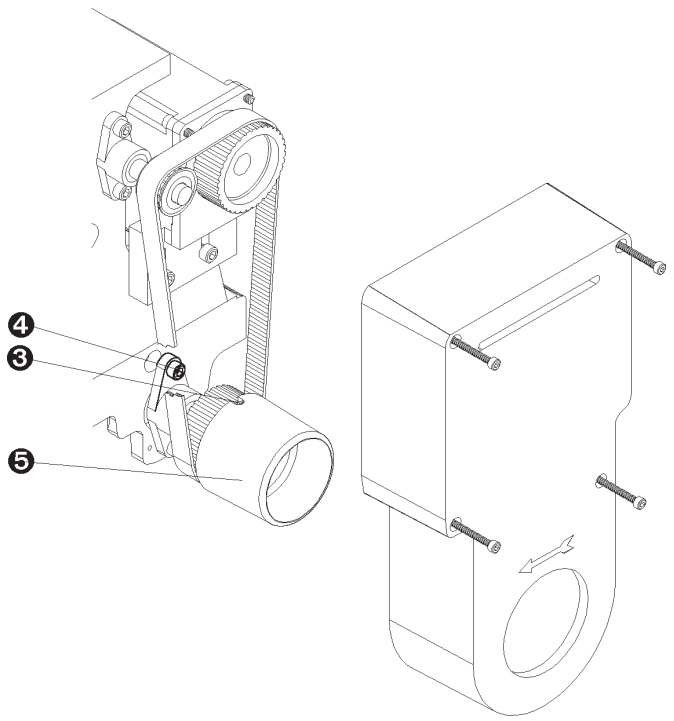

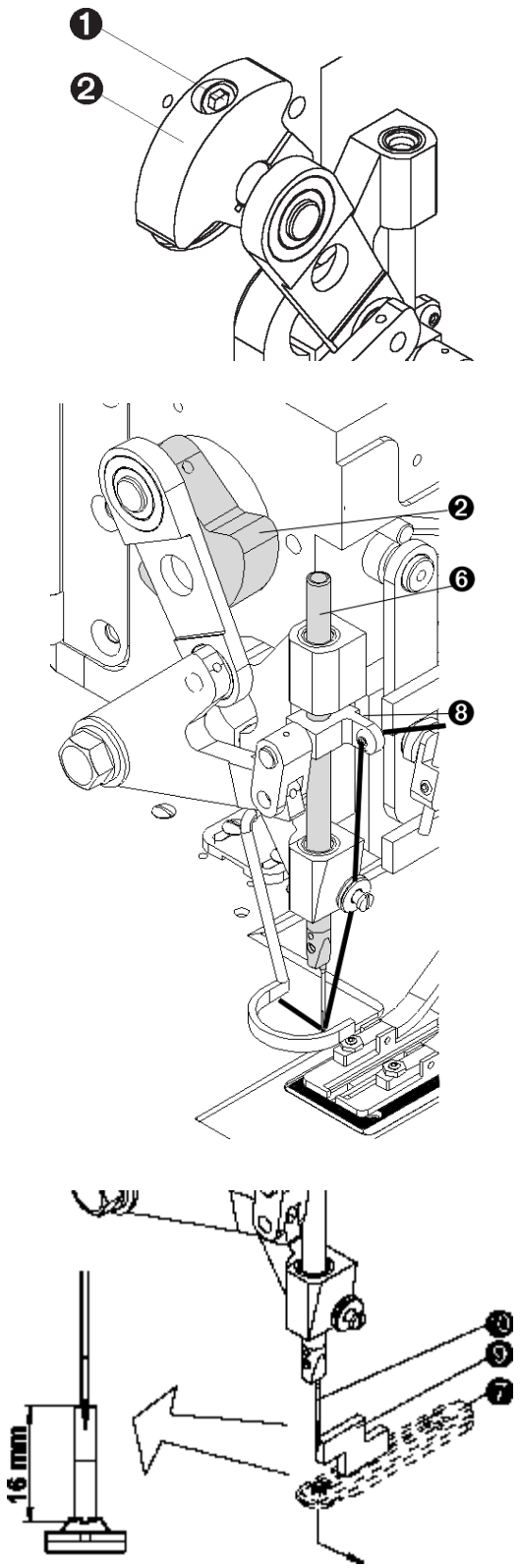

the first stitch direction

Revised:12/2020
E-mail: info@amfreece-cars.cz

E - MACHINE ADJUSTMENTS

5. BITE

Before the bite adjustment, remove the pulleycover ❷ and the head cover ❶.

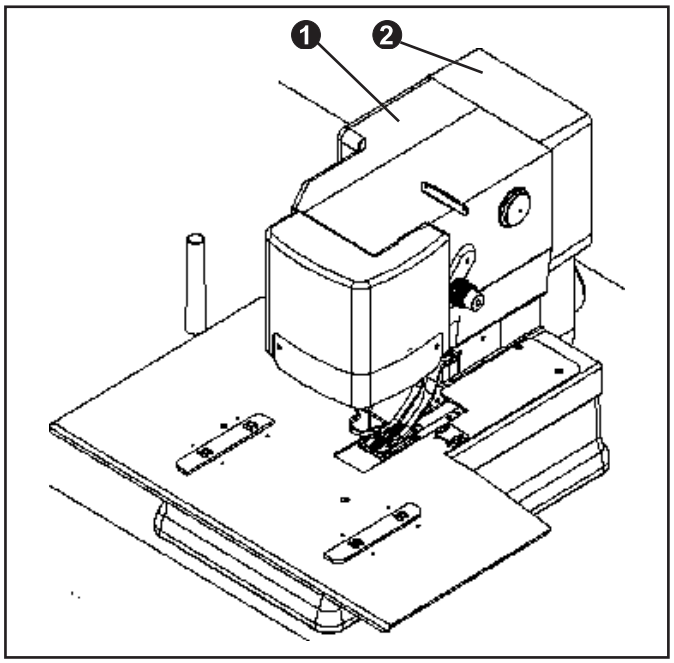

1. Bite cam

a. Check if the machine is in the home position.

b. Tilt the machine on the rest pin ❼. If the adjustment is correct, the second cam locking screw ❽ (counter clockwise of the bite cam ❾) must be roughly perpendicular to the bedplate casting.

c. Adjust the position of the bite cam so that all of the needle bite motion occurs equally with the needle out of the work piece on the up and down stroke.

Note: There must be no bite movement before the needle ❿ comes out of the work nor after it has descended into the work - see illustration. Tighten both locking screws ❽ securely.

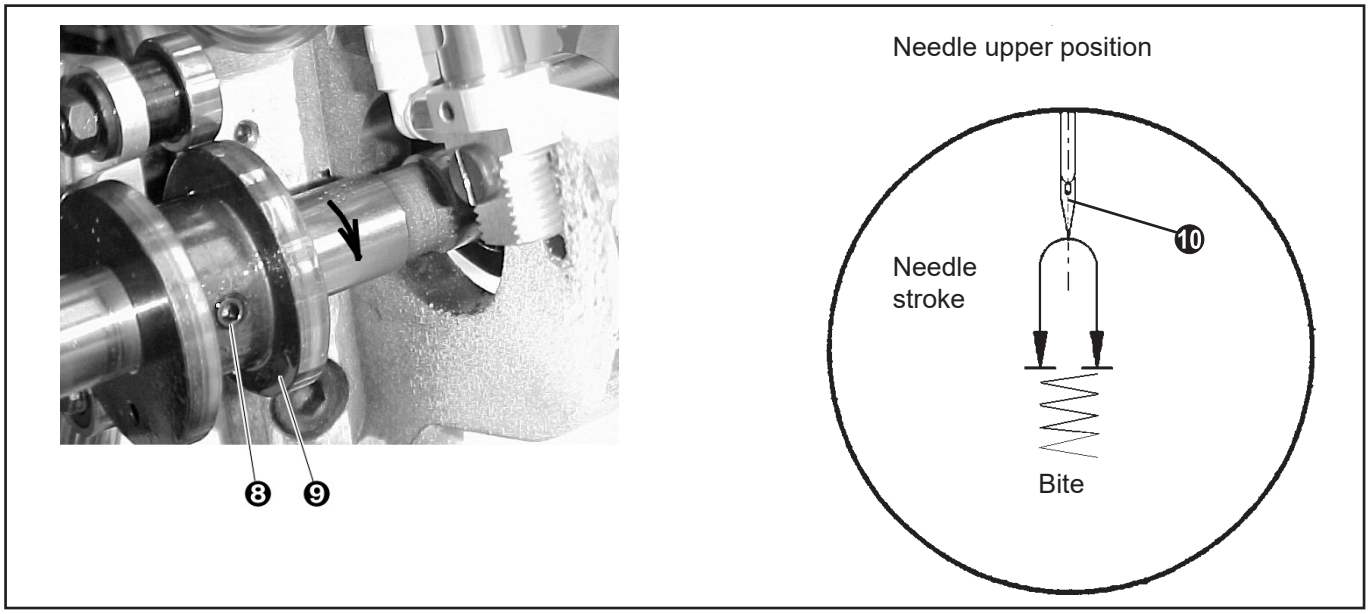

E - MACHINE ADJUSTMENTS

2. Bite width adjustment

To adjust the bite width, first remove the head cover for access to adjustments. The S-4000 ISBH is fitted with a regular bite throat plate ⓫ , that allows a bite range of 1.5 mm (1/16“) to 2.3 mm (3-32“).

a. loosen the adjusting screw ⓬
b. to increase the bite width, raise the bite lever ⓭
c. to decrease the bite width, lower the bite lever ⓭
d. tighten the adjusting screw ⓬

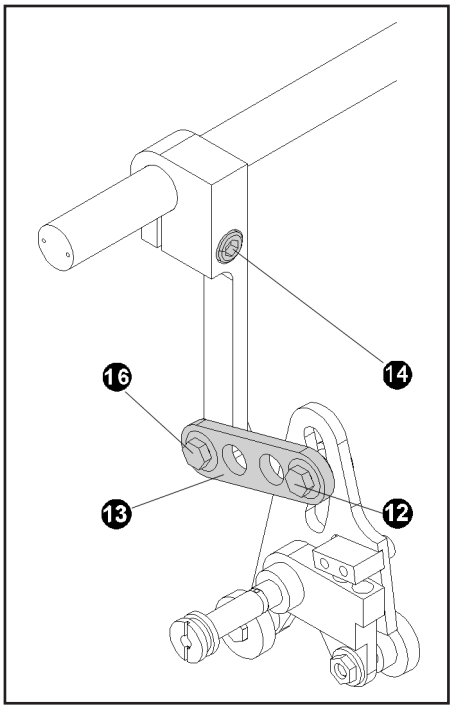

3. Centering the bite o v er the throat plate

a. with the machine in the home position - loosen the clamping screw ⓮ on the bite lever ⓯
b. for rough adjustment, using the handwheel, rotate the needle bar to its full down position and move the needle to the right side of the throat plate slot ⓫. Turn the hand wheel to the second needle ⓪ down stroke and compare the needle position in the left side of the throat plate. Continue adjusting until the needle is roughly of equal distance from the right and left sides.
c. tighten the clamping screw ⓮
d. for finite adjustment loosen the screw ⓰ and rotate the excentric nut ⓱. Tighten the locking screw ⓰.

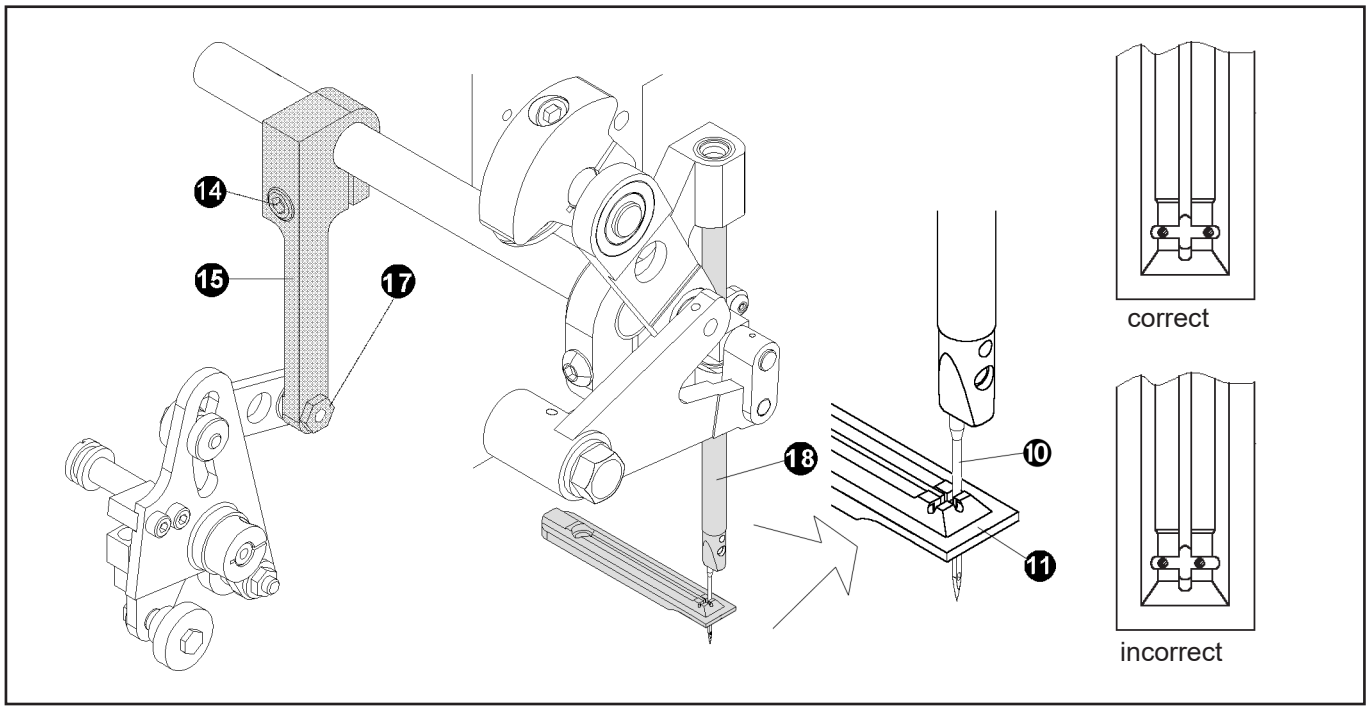

Revised:12/2020
E-mail: info@amfreece-cars.cz

E - MACHINE ADJUSTMENTS

6. FEEDING

1. Tilt the sewing head on the rest pin.

2. Bevel Gear Adjustment
   Manually turn the hand wheel counter clockwise, until the drive spring in the main cam engages with a detent (first row of stitches). Remove the bevel gear cover and loosen the screws ❶, ❷ on the horizontal bevel gears and screw ❸ on the stop.

3. Loosen two adjusting screws ❹ in the right collar ❺. Adjust the dimension 11mm from the end of the feed shaft ❻ to the collar ❼ by pressing the feed shaft ❻ against the right collar ❺. Tighten the adjusting screws ❹ in the right collar ❺. The tension of the left collar on the shaft is set.

4. Engage the left bevel gear ❽ with the vertical bevel gear ❾ and lock its position by set screws ❷. Move the stop against the gear and tighten set screw ❸.

5. Manually turn the hand wheel counter clockwise until the feed shifter lever moves to its full left position then slide the right gear ❿ into engagement with the vertical gear ❾. Tighten set screws ❶ securely.

   The bevel gear adjustment is done. By manually turning the handwheel finish the sewing cycle and bring the machine to the home position. Reinstall the bevel gear cover.

6. Clamp plate movement occurs only when the needlepoint has risen above the work piece and must be completed before the needle descends into the work.

7. For adjustment use a piece of paper to see the needle punctures.

If feeding occurs while the needle is in the work, engage the drive spring into a detent.

Loosen ⓫ the screws on the feed cam and adjust its position as needed so that all feed motion occurs with the needle out of the work. Retighten the feed cam set screws.

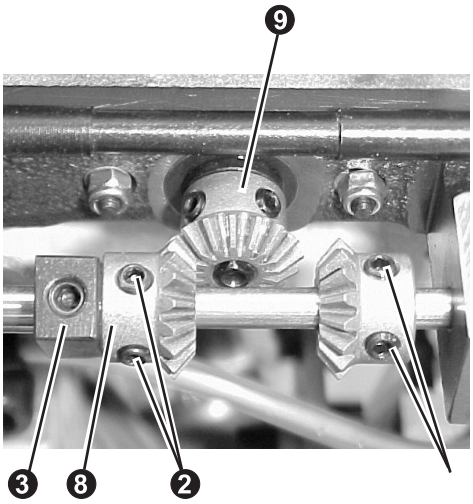

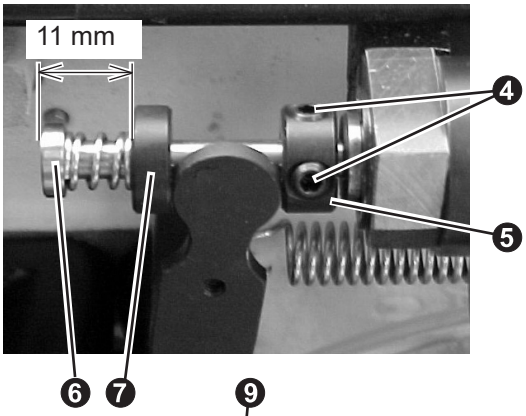

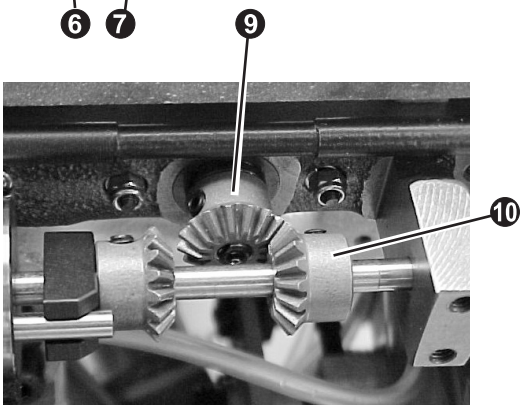

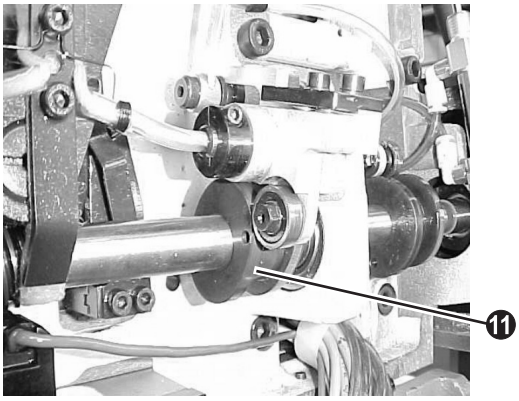

E - MACHINE ADJUSTMENTS

7. SLIP CLUTCH

The slip clutch pressure is factory set and under normal conditions will not need adjusting. The correct clutch torque setting is 0.43 Nm (60 to 65 inch ounces).

Hold the nut ❶ and tighten the adjusting screws ❷ with a torque screwdriver. Apply an equal amount of pressure to both sides of the clutch.

NOTE: If a torque screwdriver is not available, tighten the lock nuts so that the screws ❷ extend through the nuts ❶ 1.5 mm.

CAUTION: Too little torque will produce an improper material feed.
Too much torque may damage parts (bevel gears).

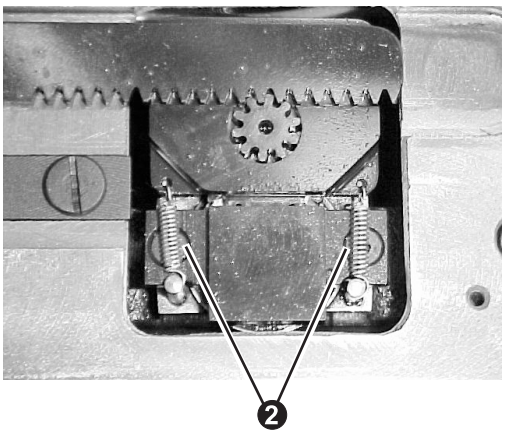

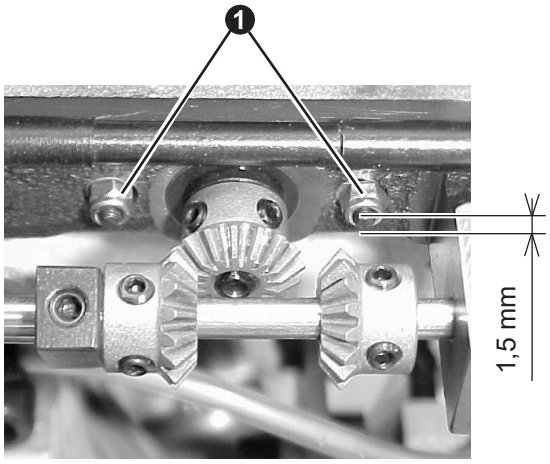

8. STITCH DENSITY

Adjust the feed connecting link position ❶ in the cam follower slot ❷ to obtain the correct stitch density.

To increase the density 1:

a. Loosen the hex socket screw ❸ and lower the link ❶ away from the bedplate to increase desity.
b. Tighten the hex socket screw ❸. Maximum density is 12 stitches per 10 mm (30 stitches per inch).

To decrease the density 2:

a. Loosen the hex socket screw ❸ and raise the link ❶ toward the bedplate to decrease density.
b. Tighten the hex socket screw ❸.
Minimum density is 4 stitches per 10 mm (10 stitches per inch).

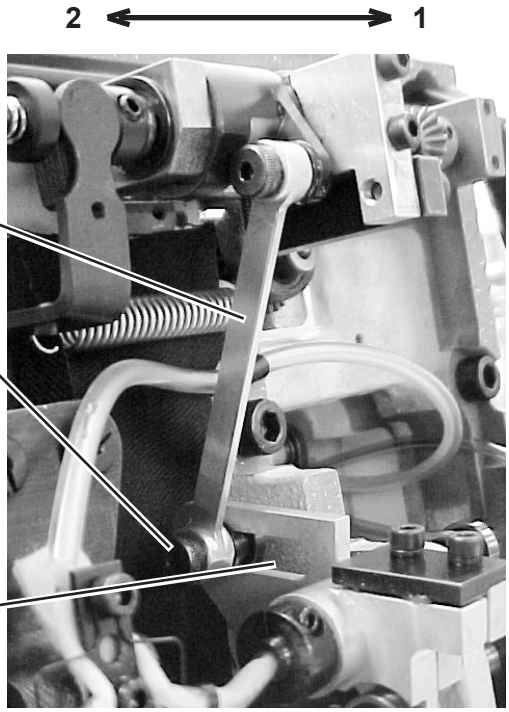

Revised:12/2020
E-mail: info@amfreece-cars.cz

E - MACHINE ADJUSTMENTS

9. ADJUSTMENT OF BARRING STITCHES

To properly set the first bar ❶, the second bar ❷ must be properly adjusted.

1. Second bar adjustment

Insert a piece of paper under the clamp feet. Turn the handwheel through the sewing cycle until the control spring ❺ release the left shifter arm pocket ❻. Check to see that the clamp plate starts to move to the left just as the needle point rises from the work piece approximately 1 mm.

If the adjustment is incorrect:

a. If the clamp plate moves when the needle is in the work

a1) loosen the screws ❸ in the worm gear
a2) hold the worm gear ❹ by hand and turn the handwheel counter clockwise slightly
a3) tighten the screws ❸ and recheck the adjustment. Repeat as needed.

b) The clamp plate moves when the needle tip is higher than 1 mm above the work surface

b1) loosen the screws ❸ of the worm gear
b2) hold the worm gear ❹ by hand and turn the handwheel clockwise
b3) tighten the screws ❸ and recheck the adjustment. Repeat as needed.

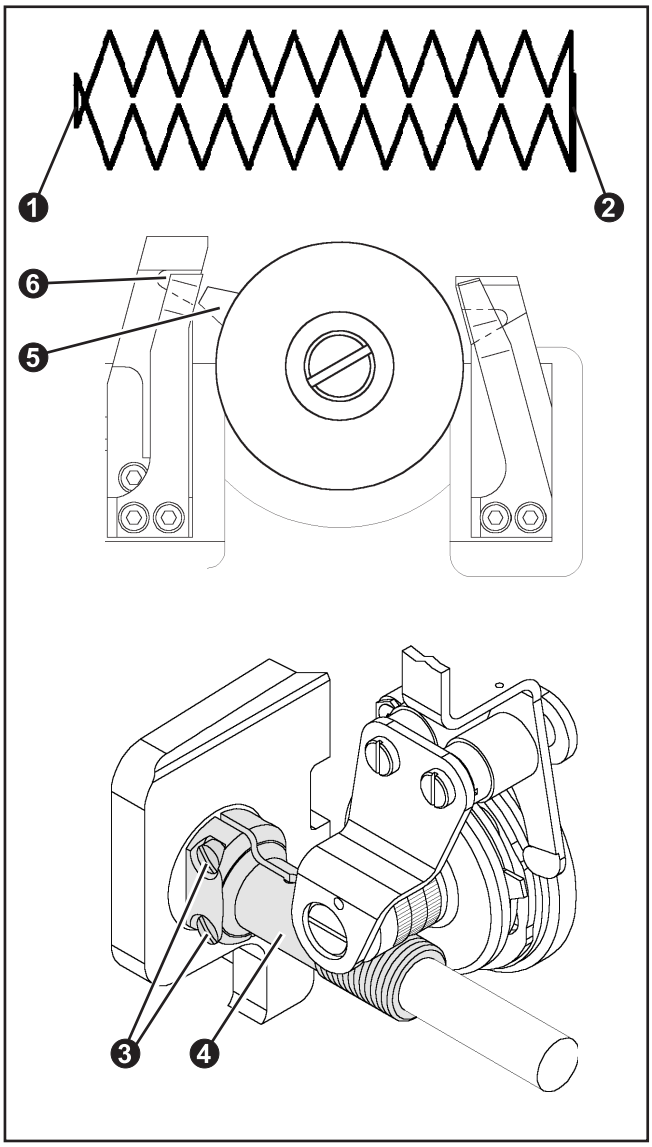

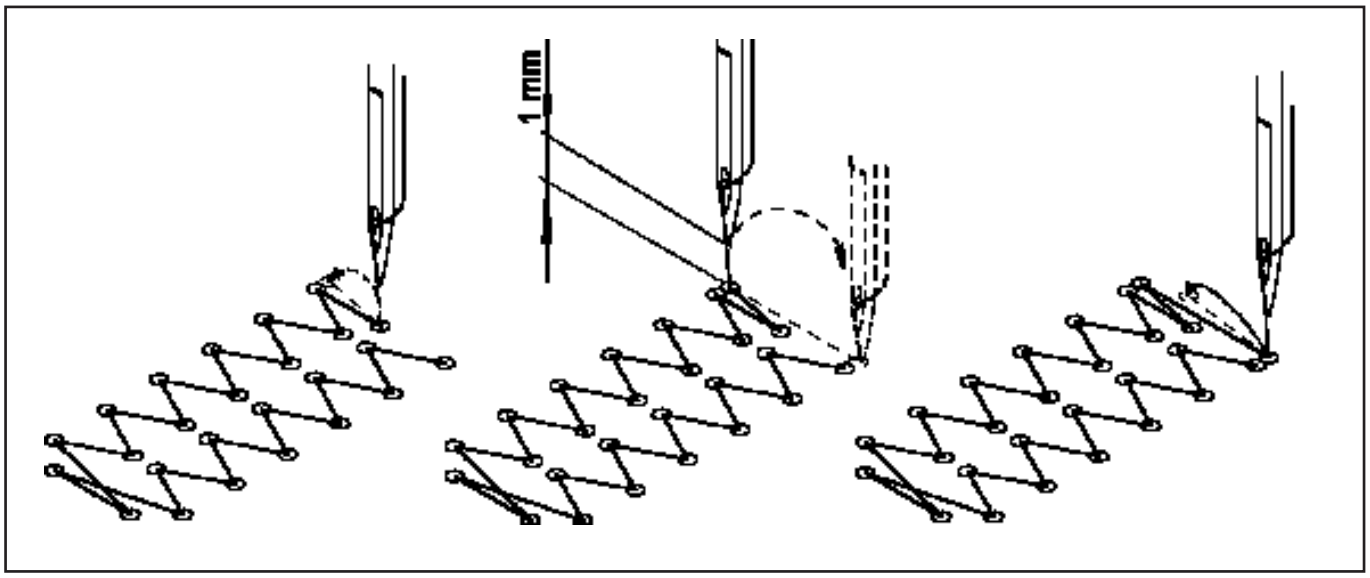

E - MACHINE ADJUSTMENTS

2. First bar adjustments

Turn the handwheel until the control spring engages into a detent. Check the distance 1-2 mm between the control spring and the shifter arm. If the distance is different, move the shifter arm after which is locked by two M4 screws ❺.

Check the quality of the sewn buttonhole on the paper. If the stitches are uneven ❻ follow below described adjustment:

Loosen the nut ❼ and turn the nut ❽ clockwise. This adjustment will provide the even stitches ❾ in the first bar.

If the length of the buttonholes ❿ is not the same, adjust the brake.

NOTE: If the spring tension on the brake is too strong, the stitch density in the bar may be increased.

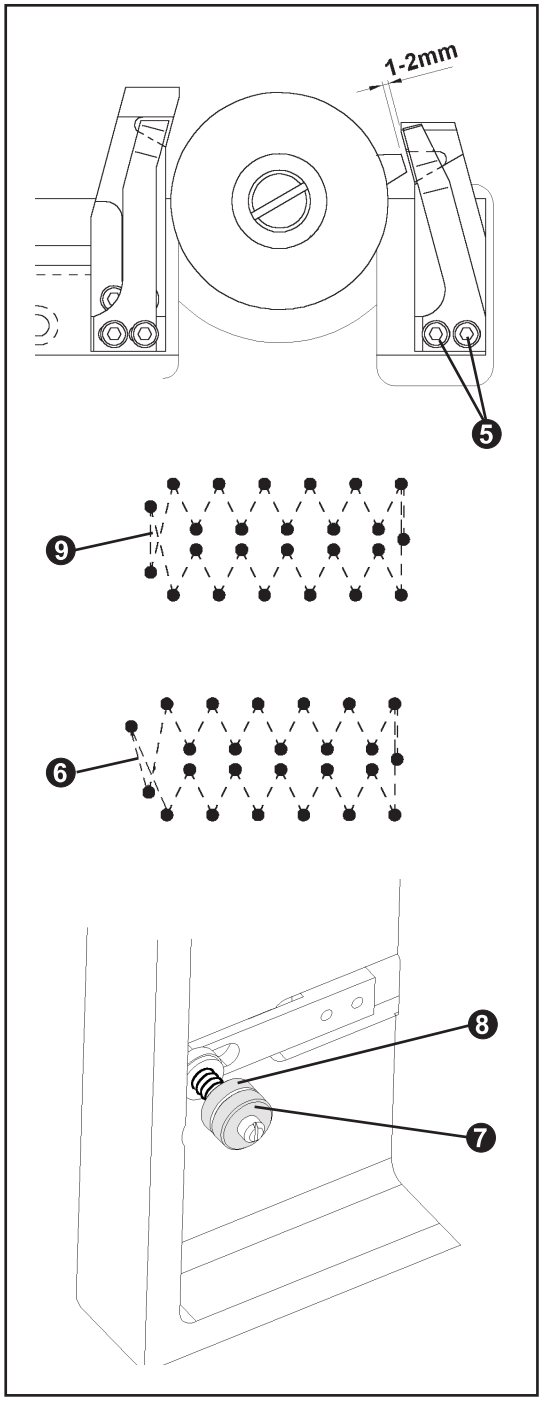

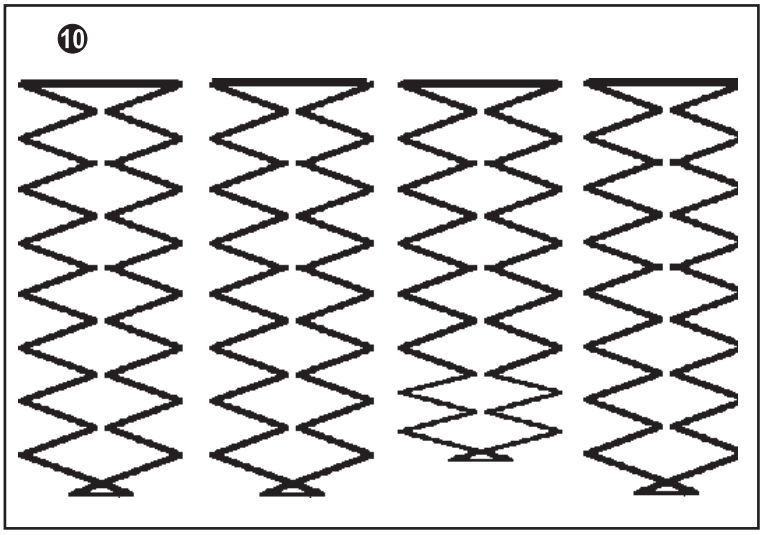

Revised:12/2020
E-mail: info@amfreece-cars.cz

E - MACHINE ADJUSTMENTS

3. The clearance adjustment on the cam during the first bar sewing

a. Turn the handwheel until the control engages into the detent of the left shifter arm
b. Continue turning the handwheel. The main cam assembly ⓫ starts turning and moving the rod ⓬.
c. Check the minimal clearance by hand on the rod ⓬ when the control spring is not engaged with shifter arm.
d. Check the rod tension when the control spring leaves the detento of the right shifter. The clearance must approximately be the same.
If incorrect:
e. Slightly loosen M4 screw ⓭ and turn the eccentric ⓮ (clockwise - clearance decreases, anti-clockwise - clearance increases).
f. Tighten M4 screw after adjustment and check the clearance in both positions.

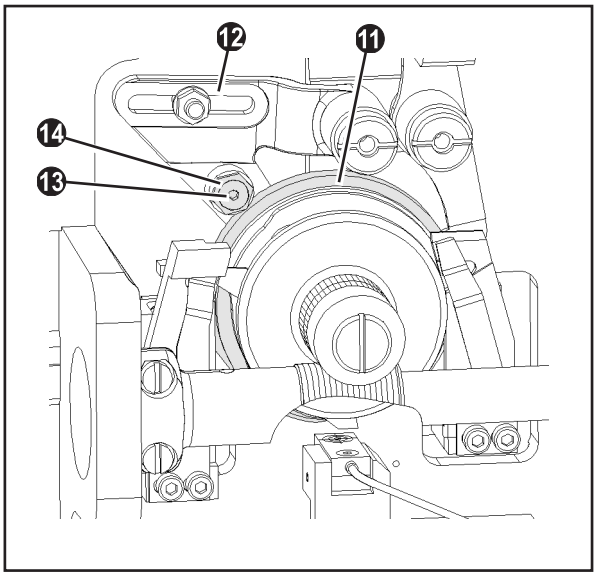

10. SPACE BETWEEN THE FIRST AND SECOND ROW OF STITCHES

1. Tilt the sewing head on the rest pin.
2. Loosen the nut ❶ and move the stud ❷ to the required position (to the right - space ❸ decreases, to the left - space increases). The space can be adjusted in range 0 - 0.9 mm.
3. Sew buttonhole on scrap fabric to check setting.

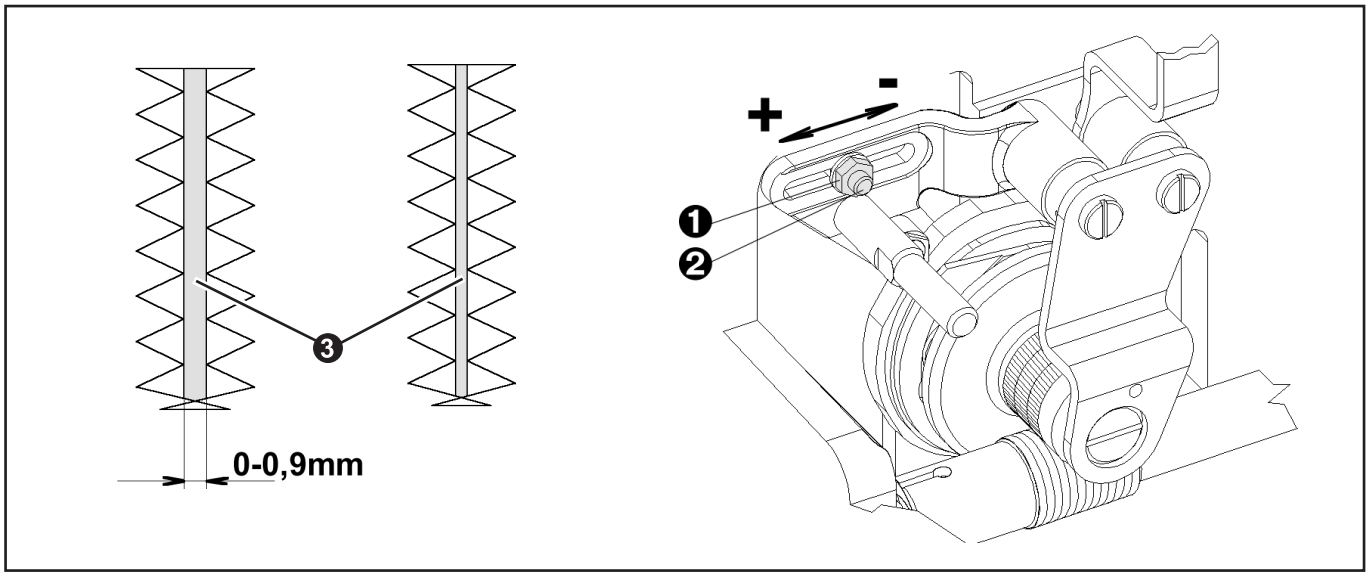

E - MACHINE ADJUSTMENTS

11. BUTTONHOLE LENGTH CHANGE

To change the sewn buttonhole length, remove the 7 screws ❸ and the cover plate ❹.

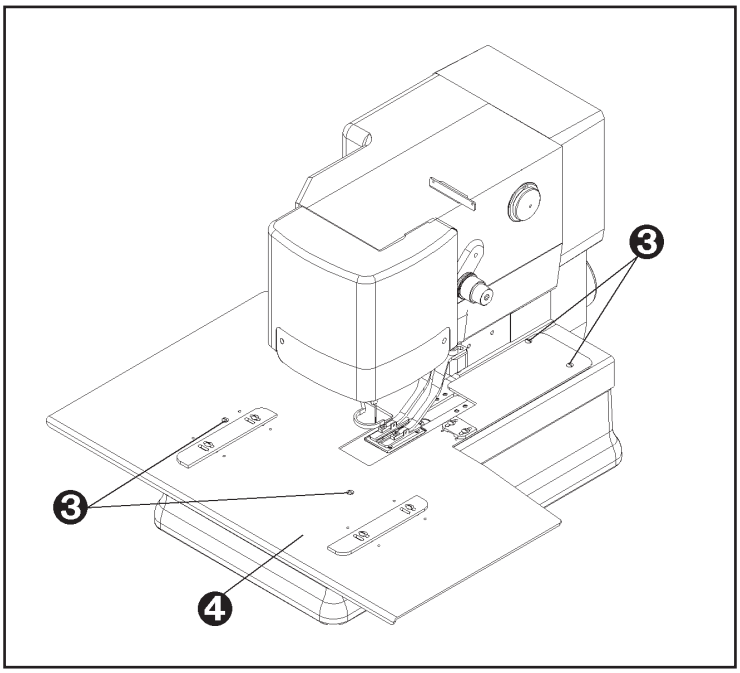

1. Loosen the screw ❺ and move the stop ❻ as needed. To the right - the buttonhole is shortened, to the left - the buttonhole is extended. The length can be set in range 15,8 - 25 mm (0.62 - 0.98“).
2. Loosen the 2 screws ❼ and slide the stop ❽ temporarily forward (away from the clamp plate).

   Reinstall the cover plate ❹. Sew two sample buttonholes on paper and measure their length.
3. Remove the cover plate ❹ again and move the front stop ❽ against the edge of the clamp plate ❾.
4. Install the cover plate ❹. The machine is ready for sewing with the changed buttonhole length.

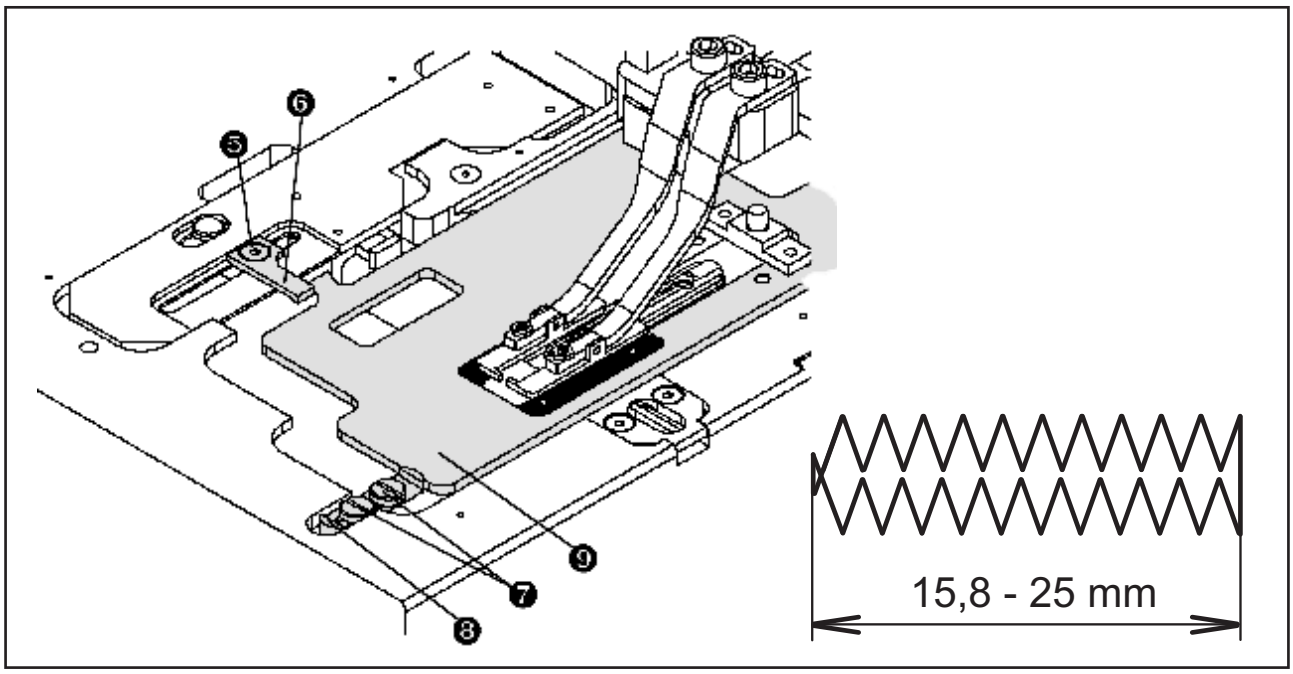

Revised:12/2020
E-mail: info@amfreece-cars.cz

E - MACHINE ADJUSTMENTS

12. LOOPER ADJUSTMENT

Before making this adjustment, follow the below described points:

- Turn the handwheel and observe the position of the connecting link ❶ at both ends of the looper link arm travel ❷. Angle A ❸ must equal angle B ❹.
- If incorrect - loosen the hex mounting screw ❺ and rotate the eccentric adjusting nut ❻ as needed. Tighten the hex mounting screw ❺.
- Turn the handwheel and bring the needle bar to the upper position.
- Check if the needle is straight.
- Tilt the machine head on the rest pin and check if the mark ❼ on the looper cam ❽ is on the left side. If the mark is on the right side, remove it and install it correctly. Return the sewing head back.
- Remove the cover plate ❾, disconnect the air tubes from the clamp feet cylinder and remove the clamping assembly ❿ from the machine, remove the throat plate ⓫, trimming hook cover ⓬ and trimming hook. Dismantle the loopers with holders.

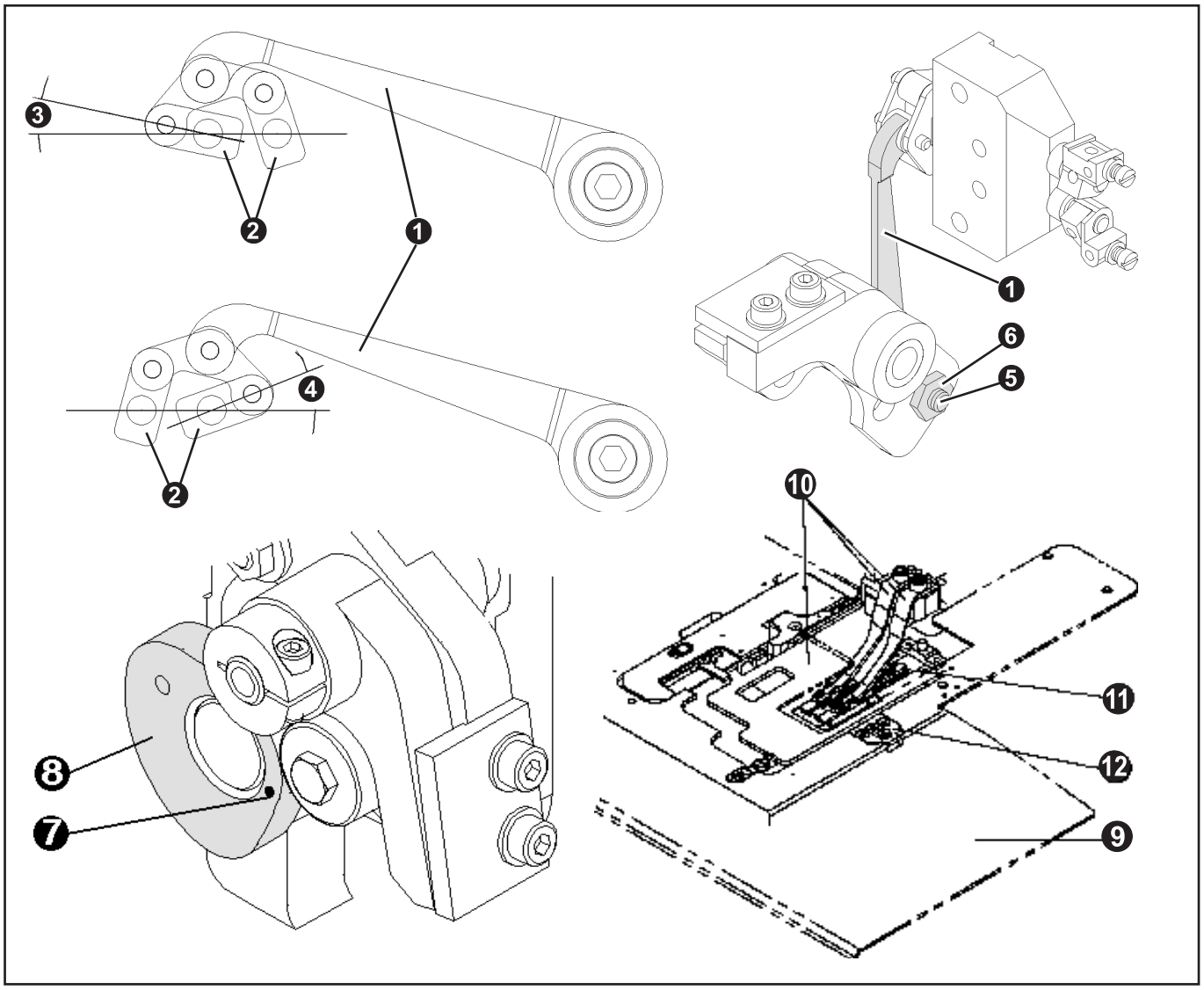

E - MACHINE ADJUSTMENTS

The first looper adjustment

1. Bring the machine to the home position and loosen the screws ⓭ of the looper cam ❽ and adjust the looper cam to the lowest position.
2. Loosen the looper set screw ⓯ and turn the looper to be perpendicular to the hole in the looper holder.
3. Install the holder with the first looper ⓮ on the shaft.
4. Loosen the looper holder screw ⓰ and move the holder so that the needle passes the looper in the center of the looper recess. There must be clearance 0,4 mm between the needle and the looper recess. Tighten the looper holder screw ⓰.
5. Loosen the looper screw ⓯ and turn the looper ⓮ to the needle to obtain the distance 0,1 mm between the needle and the looper tip.
6. Turn the hand wheel counter clockwise and insert the gauge ⓱ with 1 mark (wider side of the gauge) between the needle bar holder and the needle bar clamp when the needle returns to the home position from the lower position.
7. Check to determine if the tip of the looper is at the centerline of the needle 1 mm above the needles eye.
8. If incorrect - loosen the looper cam screw ⓭ by the wrench and hold it . Turn the hand wheel (counter clockwise - if the looper tip is higher than 1 mm; clockwise - if less than 1 mm). Tighten both looper cam screws ⓭ securely.
9. If it is necessary to adjust the looper cam again, check the clearance 0,4 mm between the needle and the looper recess.

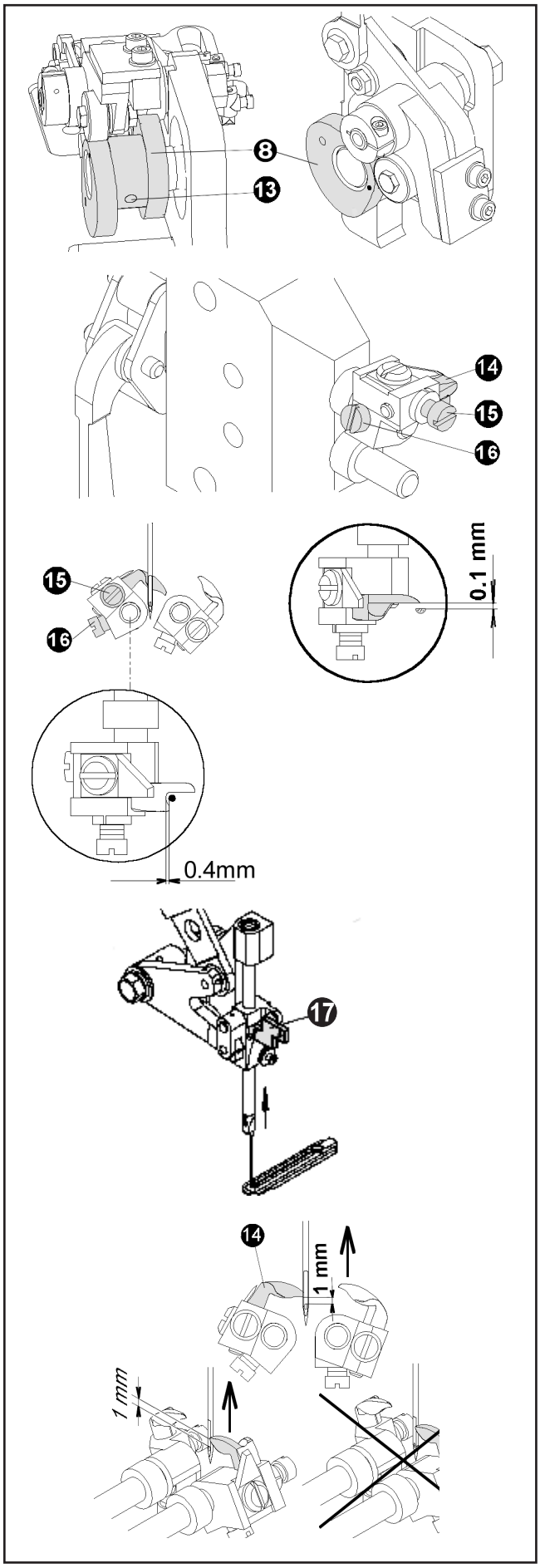

Revised:12/2020
E-mail: info@amfreece-cars.cz

E - MACHINE ADJUSTMENTS

The second looper adjustment

10. Insert the second looper on the looper ⓲ shaft.
11. Loosen the looper holder screw ⓳ and move the holder so that the needle passes the center of the looper recess. There must be clearance 0,4 mm between the needle and the looper recess. Tighten the looper holder screw.
12. Loosen the looper screw ⓴ and turn the looper ⓲ to the needle to obtain the distance 0,1 mm between the needle and the looper tip.
13. Turn the handwheel counter clockwise, insert gage ⓱ with mark 2 (narrower side of the gage) between the needle bar holder and needle bar clamp.
14. Check if the looper tip crosses the axis of the needle 1 mm above the needle eye.
15. If it is necessary to adjust the looper cam again, check the first looper adjustment.

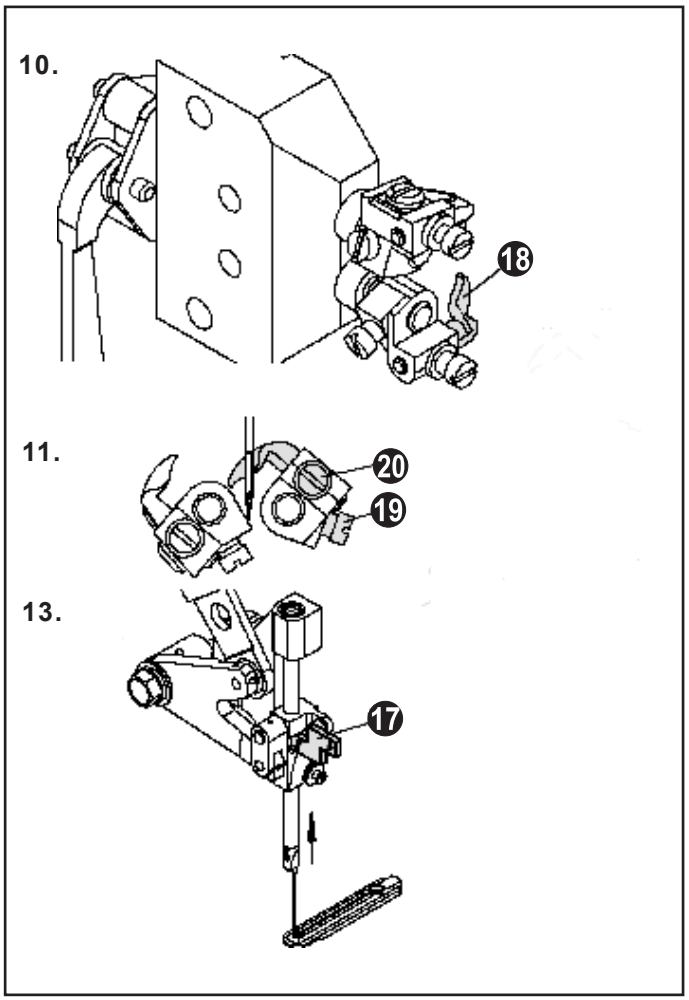

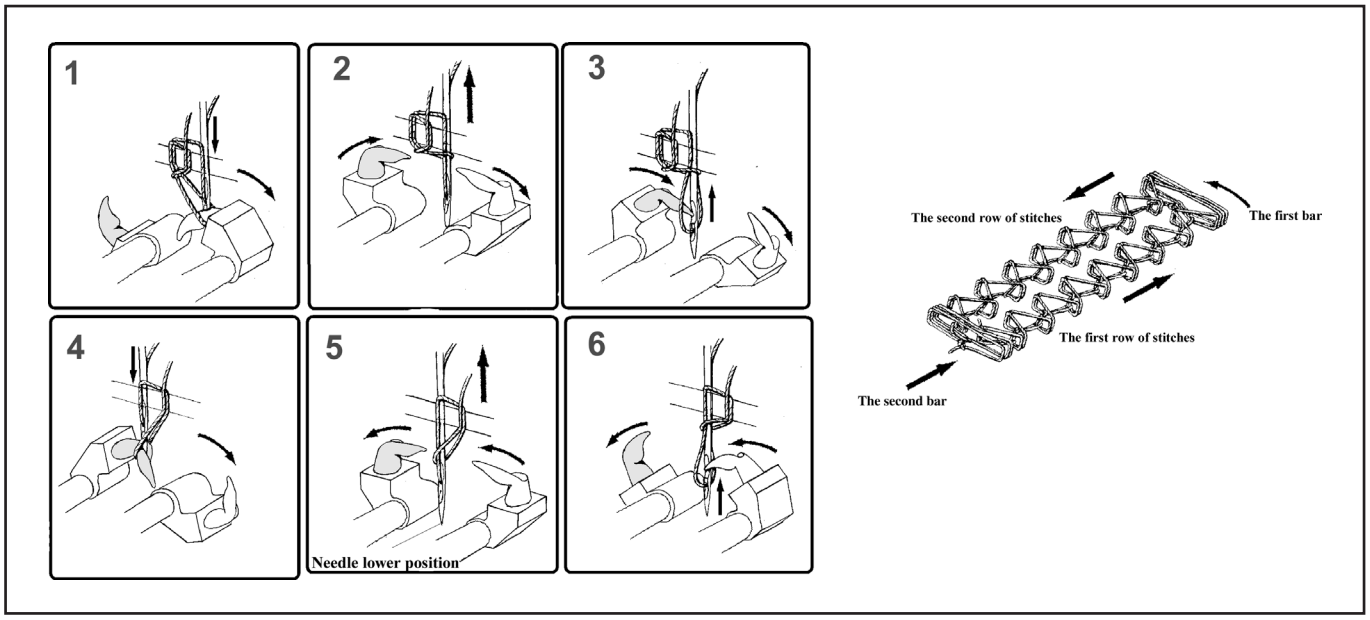

E - MACHINE ADJUSTMENTS

13. THREAD DRAW-OFF

1. Adjustment of the Draw-Off Lever Position

The correct adjustment ensures a long enough thread tail for starting the sewing of the next buttonhole. Remove the covers because this mechanism adjustment is performed in the rear of the head. Air supply is necessary for this adjustment.

a. loosen the screw ❻
b. the piston ❼ of the cylinder ❽ is in the home position (retracted). Move the lever ❾ to the pin ❿ with minimal clearance 0.1 mm. Tighten the screw ❻
c. check the correct clearance adjustment by switching the valve ⓫ of the draw-off cylinder (YV1).

2. The thread end adjustment

If the first stitches are missing or the buttonhole is not sewn, follow the below mentioned steps:

a. loosen the screw ❶.
b. turn the draw-off lever ❷ counter clockwise to increase the thread tail length; turn the draw-off lever clockwise to decrease the thread tail length

3. Locking the stitches

If the skipped stitches problem appears during the sewing, follow the below mentioned steps:

a. loosen the screw ❸
b. move the thread take-up ❹ to increase the size of the needle loop

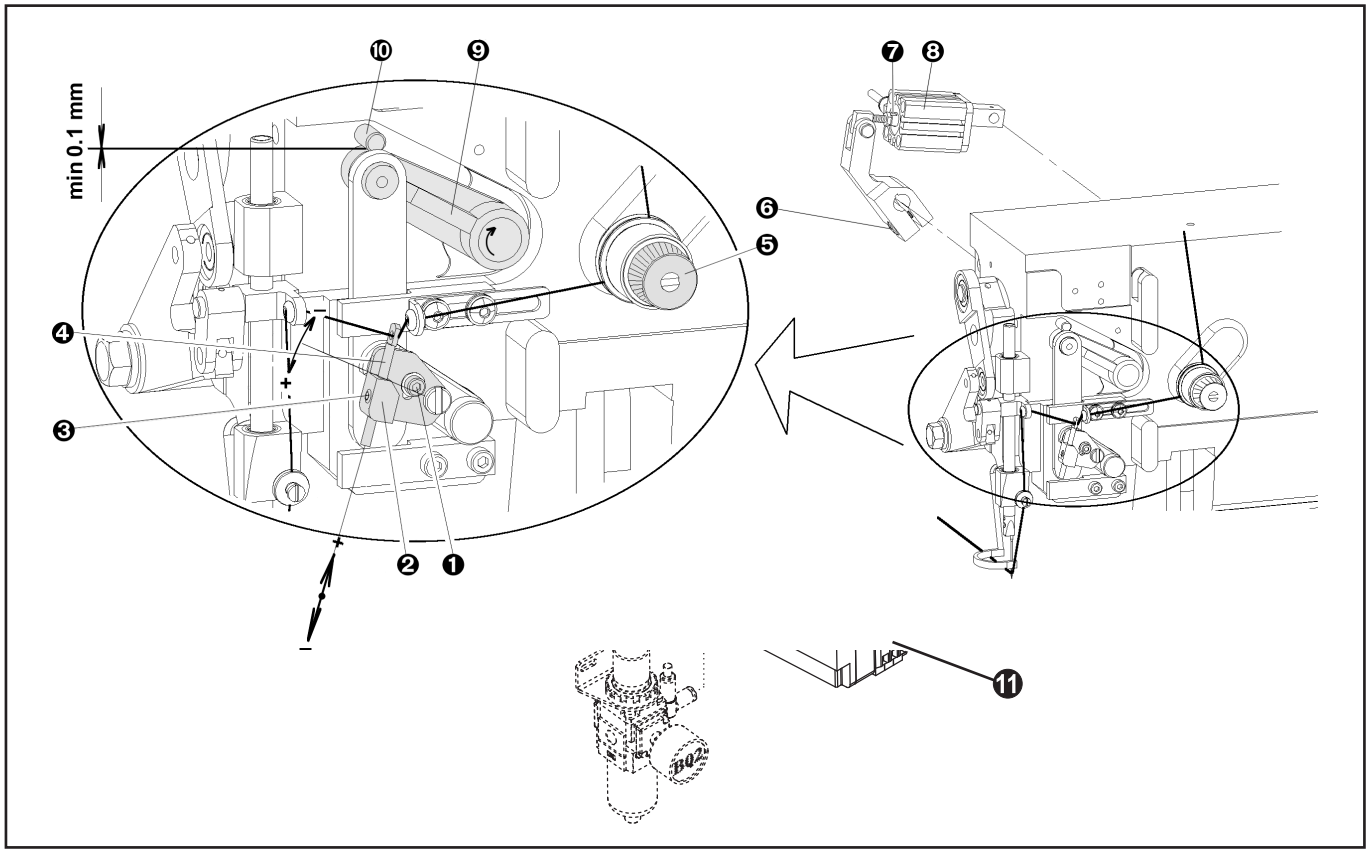

E - MACHINE ADJUSTMENTS

14. THREAD TENSION

The thread tension influences the appearance of the buttonhole. A thread tension change may be needed if the thread and fabric change. Check to be certain all parts, which contact the thread, are smooth and polished with no burrs or sharp edges.

- By turning the tension knob ❶ clockwise, the thread tension increases.
- By turning the tension knob ❶ anti-clockwise, the thread tension decreases.

NOTE: Too big thread tension can cause the unsightly appearance of the buttonhole when sewing on a thin and elastic material.

1. Adjustment of the tension discs opening

The opening of the tension discs is performed when the second bar is sewn. When the tension discs are opened, it is possible:

a. to pull the thread from the spool when the draw-off lever ❷ receives the impulse for operation
b. by decreasing or increasing of the air flow it is possible to regulate the tightening of the last loop in the sewn buttonhole

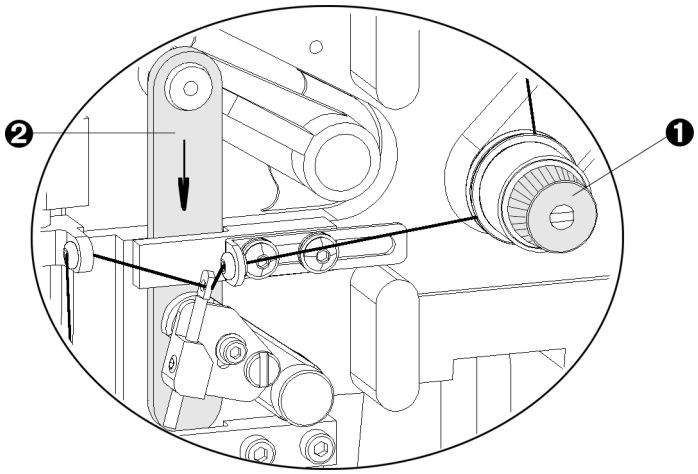

E - MACHINE ADJUSTMENTS

2 . The correct posit ion of the tension mechanism

a. remove the tension assembly ❸ from the shaft ❹
b. check if the distance between the stud slot edge and the pin ❺ is 3.5 mm If incorect, it is necessary to adjust the position on the pin.
c. remove the pulley cover and the head cover to obtain a good access for this adjustment. Switch off the air supply.
d. disconnect the air tube ❻ from the cylinder.
e. loosen the nut ❼ and turn the cylinder ❽ as necessary. Turning clockwise the pin is extended. Tighten the nut ❼ whenthe correct measurement is obtained.
f. connect the air tube ❻ to the cylinder, open the air supply and install the covers.

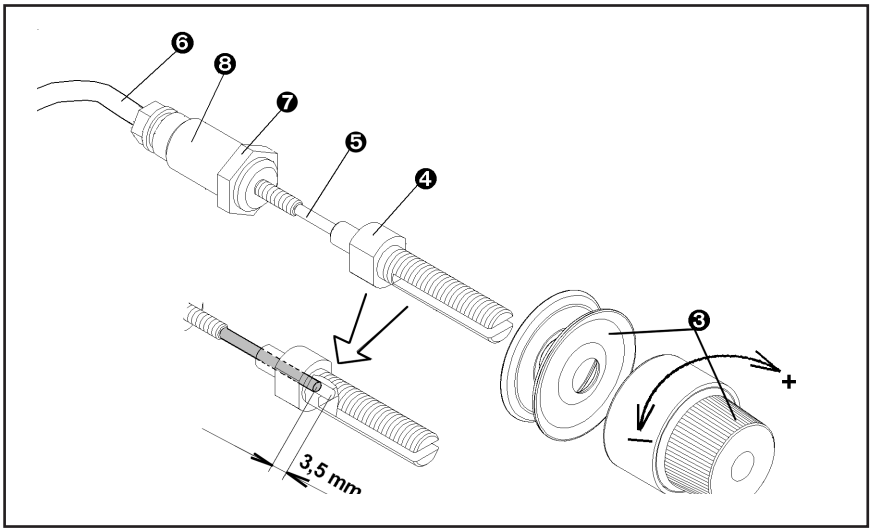

3 . Regulation of the tension discs opening

If the last stitch is not tightened, follow the below mentioned steps:
a. loosen the locking nut ❾ on the speed controller ❿
b. To obtain better tightening of the last stitch, tighten screw ⓫ and lock the nut ❾ securely.

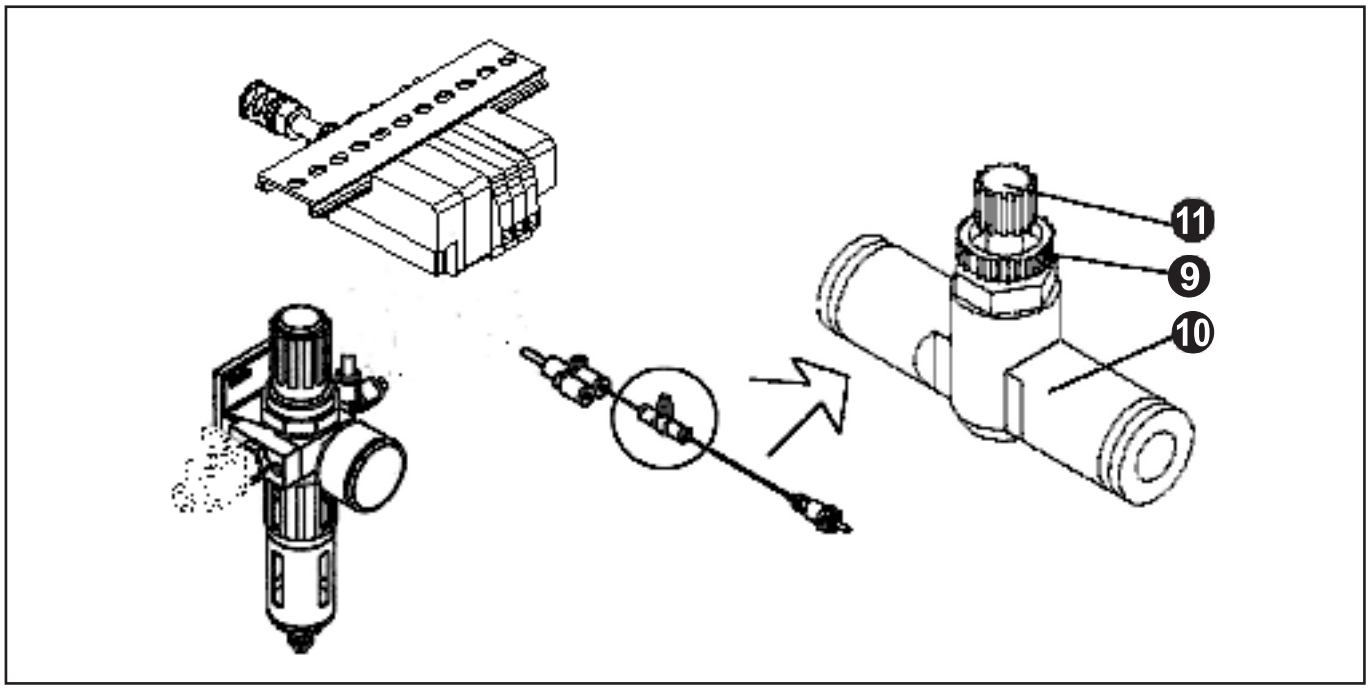

Revised:12/2020
E-mail: info@amfreece-cars.cz

E - MACHINE ADJUSTMENTS

15. THREAD TRIMMING

Trimming mechanism ensures the correct thread trimming after sewing the last stitch. A the trimming hook moves in the direction of arrow, both thread loop legs A and B are pulled forward. When the thread hook approaches the end of the stroke, leg A contact the trimming knife, cutting the thread.

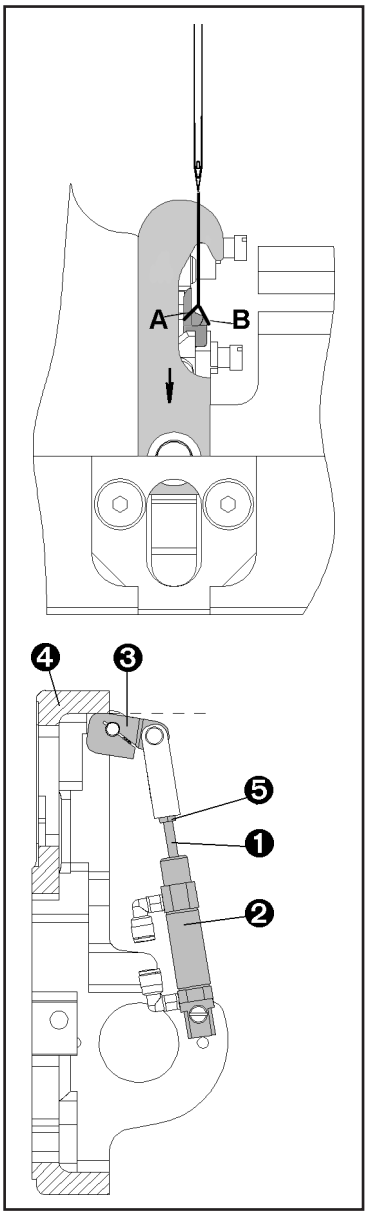

1. Trimming cylinder adjustment

a. tilt the machine head on the rest pin and close the air supply. Extend the piston ❶ of the cylinder ❷ to the maximum position.
b. check to be certain that the cylinder does not push the lever ❸ too high and into contact with the bedplate casting ❹. If no clearance exists, adjust as described in c, d, and e below:
c. loosen the screw ❻
d. to obtain the correct position of the lever ❸, loosen the nut ❺ and turn the cylinder piston ❶ in or out as needed
e. tighten the nut ❺ and the screw ❻. After this adjustment check if no axial clearance exists on the shaft ❼.
f. if the axial clearance exists on the shaft, loosen the screw ❻, move the shaft ❼ to the left so that the locking ring ❽ touches the recess in the plate ❸. Move the lever to the right and tighten the screw ❻.

2. The trimming hook ⓫ adjustment

a. push the piston ❶ of the trimming cylinder ❷ to the maximal position and loosen the screw ❾ of the trimming actuator ❿.
b. turn the trimming actuator ❿ and set the clearance 1.0 mm between the throat plate and the point of the trimming hook.
c. tighten the screw ❾ of the trimming actuator ❿.
d. open the air supply and check by switching the valve of the rimming cylinder if the actuator ❿ does not hit the bedplate casting.

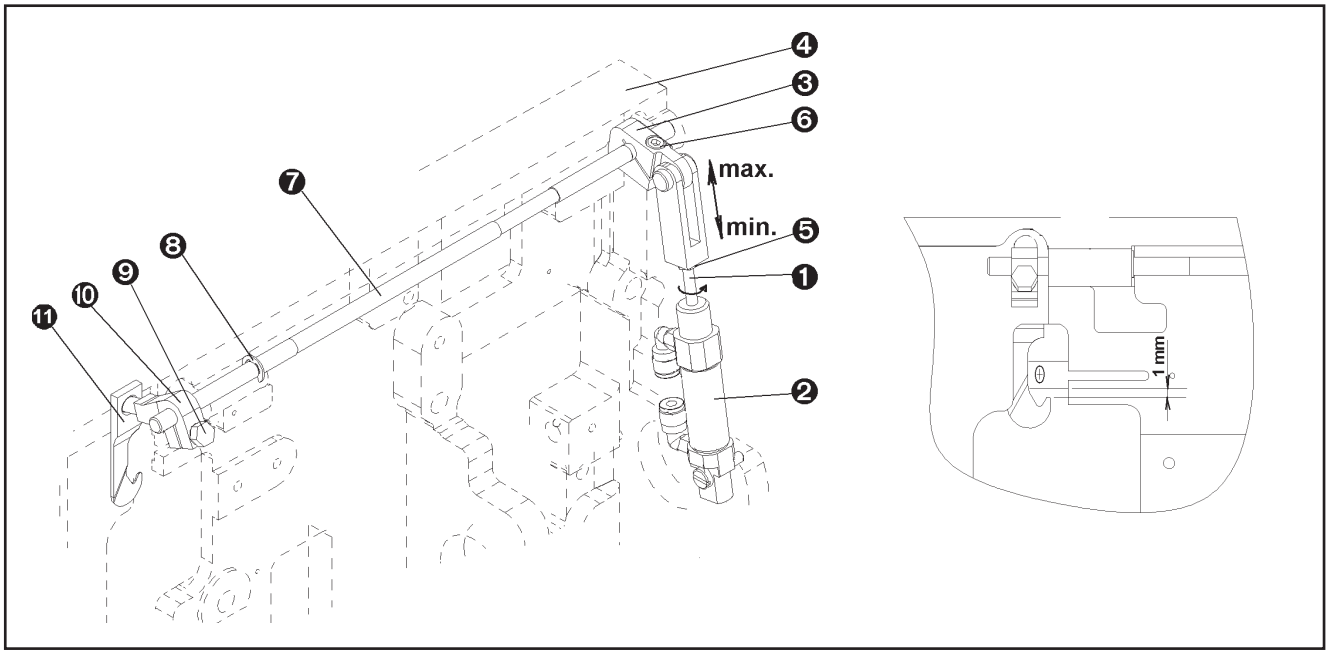

E - MACHINE ADJUSTMENTS

16. MACHINE HEAD CLAMP FEET ADJUSTMENT

1. Adjustment for clamp height

Be sure that air supply is switch on and the clamp feet are opened. If clamp feet are not opened, push the clamp Up / Down button.

a. loosen the nut ❶
b. turning the screw ❷ clockwise lowers the clamp feet mechanism ❸ to clamp mat ❹.
c. tighten the nut ❶

NOTE: Correct height is when the underside of the clamp feet are slightly lower than the point of the needle in the home position.

2. Adjustment of the distance between the clamp feet

Be sure that the clamp feet are closed. If clamp feet are not closed, push the clamp Up / Down button.

a. turn the handwheel to be sure that needle does not hit the clamp feet ❸. If it hits:
b. push the clamp up/down button to open the clamp feet
c. loosen the screw ❺ and get the clamp feet arm further from the needle and tighten the screw ❺
d. to check this adjustment, turn the handwheel when the clamp feet are closed. The needle must not hit the clamp feet.

NOTE: Keep minimal distance between the needle bar and the clamp feet during this adjustment. Too big distance of the clamp feet can cause the missing stitches when sewing on thin and elastic fabrics.

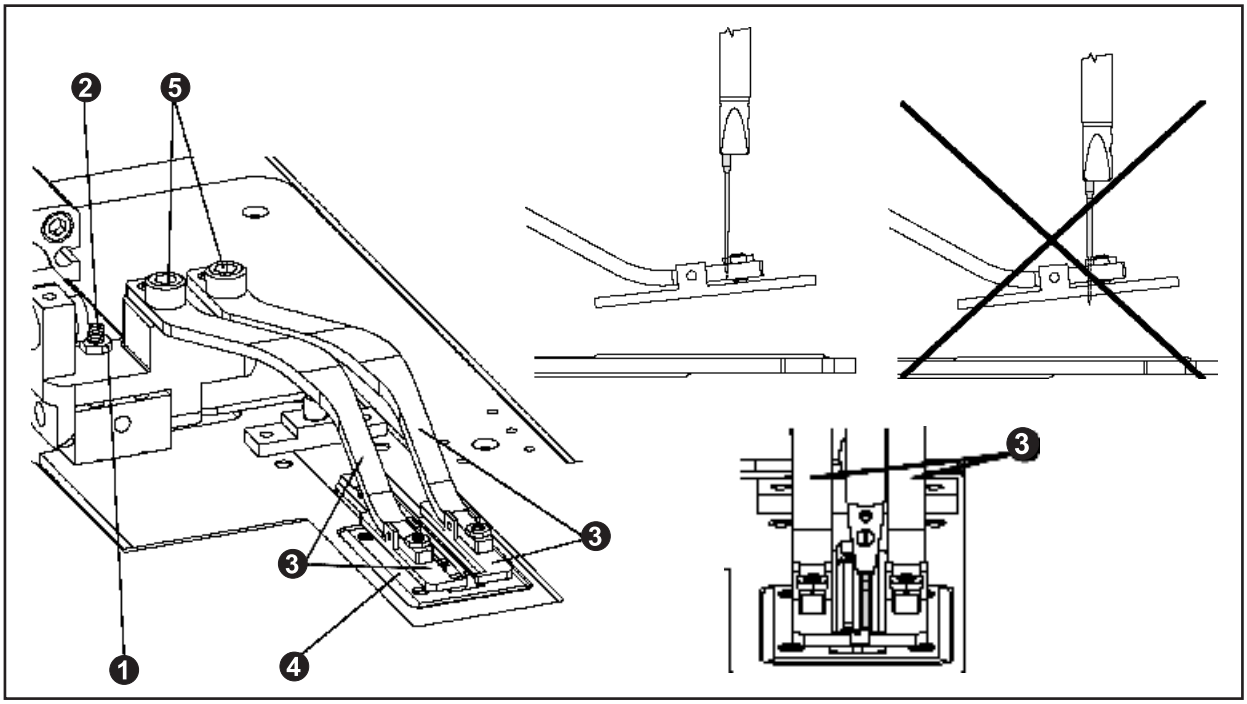

Revised:12/2020
E-mail: info@amfreece-cars.cz

E - MACHINE ADJUSTMENTS

3. Clamp feet pressure adjustment

The whole length of the clamp feet must hold the sewn work with the same pressure.

a. Push the clamp up/down button to close the clamp feet ❸.
b. To adjust the clamp feet to the correct position, loosen the nut ❻ and turn the screw ❼
c. Tighten the nut ❻. the same pressure

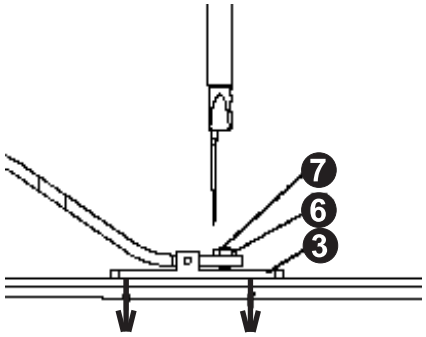

the same pressure

17. ADJUSTMENT OF THE STOPPING SENSOR POSITION

Follow the below described steps to set the position of the sensor.

1. Put machine in the service mode (see E-3).
2. Turn the handwheel counter clockwise until the machine is in the position for sewing the second bar. The stop disk finger ❶ must be perpendicular to the sensor ❷.
3. Loosen the screws ❸ and move the sensor bracket ❹ to the right. Tighten the screws ❸.
4. Loosen M3 screw ❺ and adjust the sensor position so that the stop disk finger ❶ is in the center of the sensor mark ❻. The red LED ❼ lights up on the sensor.
5. Tighten the M3 screw ❺.
6. Return the machine head back to the working positon.
7. Push the **F6** key on the control panel and switch the machine to the working mode.
8. Connect the air tubes with the indexer clamp feet. Open the air supply.
9. Start the machine and check the correct stopping of the machine. The needle bar must stop in the home (upper) position.

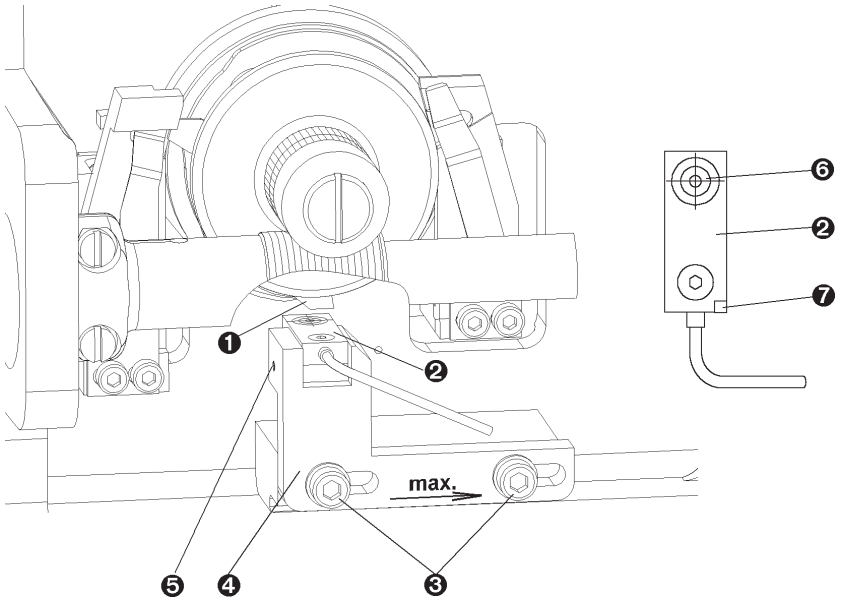

E - MACHINE ADJUSTMENTS

18. CHANGING THE DRIVE BELT

1. Dismantle the pulley cover ❶ by loosing the screws M4 ❷.
2. Turn the hand wheel ❸ to set the position of the shaft so that the screw ❹ on the pulley ❺ levels the screw ❻ on the bearing housing.
3. Secure the position with the holder 24.0030.0.000 ❼, which is a part of the accessory . With the screw ❻ mount the holder to the bearing housing.
4. Turn the needle bar shaft pulley ❽ until the needle bar comes to the upper position.
5. Secure the position with the holder 24.0024.0.000 ❾, which is a part of the accessory. With the screw ❿ mount the holder to the bearing housing.
6. Turn the motor pulley ⓫ until the marks ⓱ on the motor flange and roller level.
7. Loosen the screws ⓭ on the motor flange ⓮ and the motor with the flange downwards in order to mount the belt.
8. Fit the belt ⓯ onto the pulley of the shafts ❺, ❽ and motor pulley ⓫. Move the flange ⓮ together with motor ⓰ upwards. This i s the way to tension the belt ⓯. Tighten the screws ⓭ to secure the flange. Make sure the marks ⓱ are leveled.
9. Remove the pulley holders ❼, ❾.
10. Check the adjustment by pressing the pedal. The needle bar must be in the top dead centre.
11. Small changes in the position of the needle bar can be changed in program parameters:

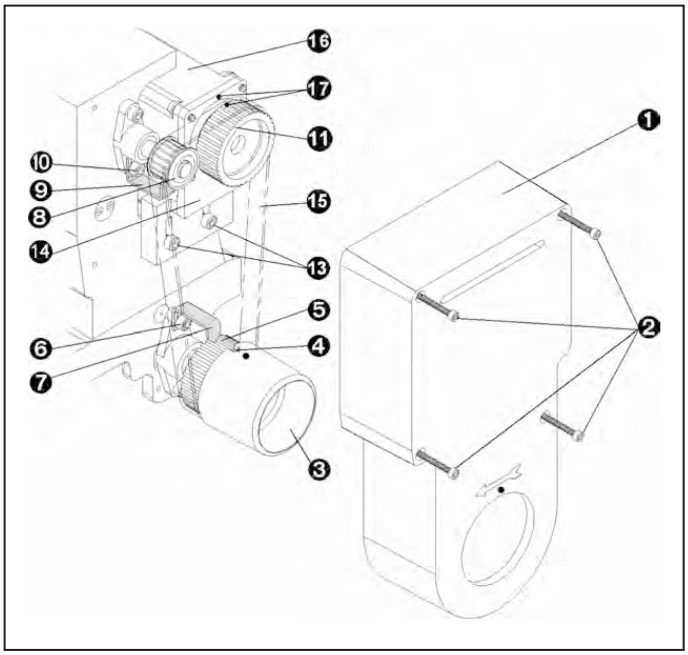

a) needle bar just before top dead centre

- ⓲ press => ⓳ „Ndl up pos ....imp“

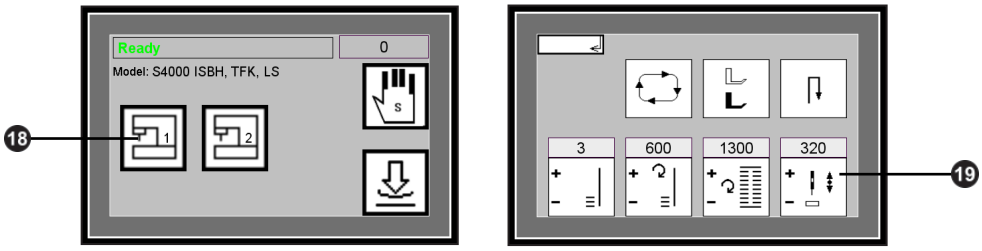

- increase the value to reach correct position of the needle bar

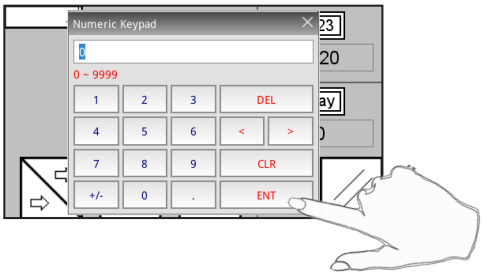

- press ⏎, to go back to the operation mode

b) needle bar behind top dead centre

- reduce the value to reach correct position of the needle bar
- press ⏎, to go back to the operation mode

Revised:12/2020
E-mail: info@amfreece-cars.cz

E - MACHINE ADJUSTMENTS

19. THE MAIN CAM CHANGE

1. Loosen the screws ❶ and remove the holder ❷.
2. Unscrew the screws ❸ and remove the right control spring ❹ and the holder ❺.
3. Loosen the stud ❻ and remove the worm gear hub ⓴ and the main cam assembly ❼ . Dismantle the assembly .
4. Assemble the main cam assembly according to the following steps:

a) Install the washer ❾ on the barring cam ❽. The mounting hole ㉒ must be covered.

b) Install the feed reversing cam ❿ by the same way.

c) Place the stop disc ⓭ on the feed reversing cam ❿ and fix it using the screws ⓫ and ⓬.

d) Insert the springs ⓮ into the holes in the stop disc and install the drive disc spring ⓯. Lock it using two screws ⓰.

5. Remove the spring ⓱ from the pin ⓲.
6. Using a grease, place the thrust washer ⓳ on a bedplate.
7. Install the main cam assembly ❼ and the worm gear hub on the thrust washer. Lock it by stud ❻.
8. Install the spring ⓱ on the pin ⓲.
9. Install the holder ❺,control spring ❹ and tighten the screws ❸.
10. Install the holder ❷ and lock it by screws ❶.
11. Turn the hand wheel to check the clearance on the main cam - see section E9, point 3.
12. Switch the machine on and check if the machine stops in the home position - see section **E2**, **E9**, point 1
13. Check the shape of a bar - see **E9**, point 2.
14. Sew a few buttonholes . The shape of a bar must be as shown on picture below.
15. If incorrect, tilt the machine head and move the left

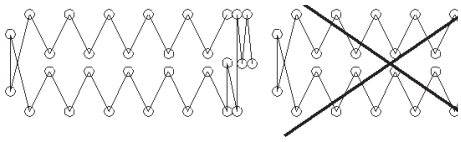

shifter arm to the left to obtain correct shape of a bar (the clearance between the control spring and the shifter arm spring ㉑ must approximately be 1,2 - 1,5 mm).

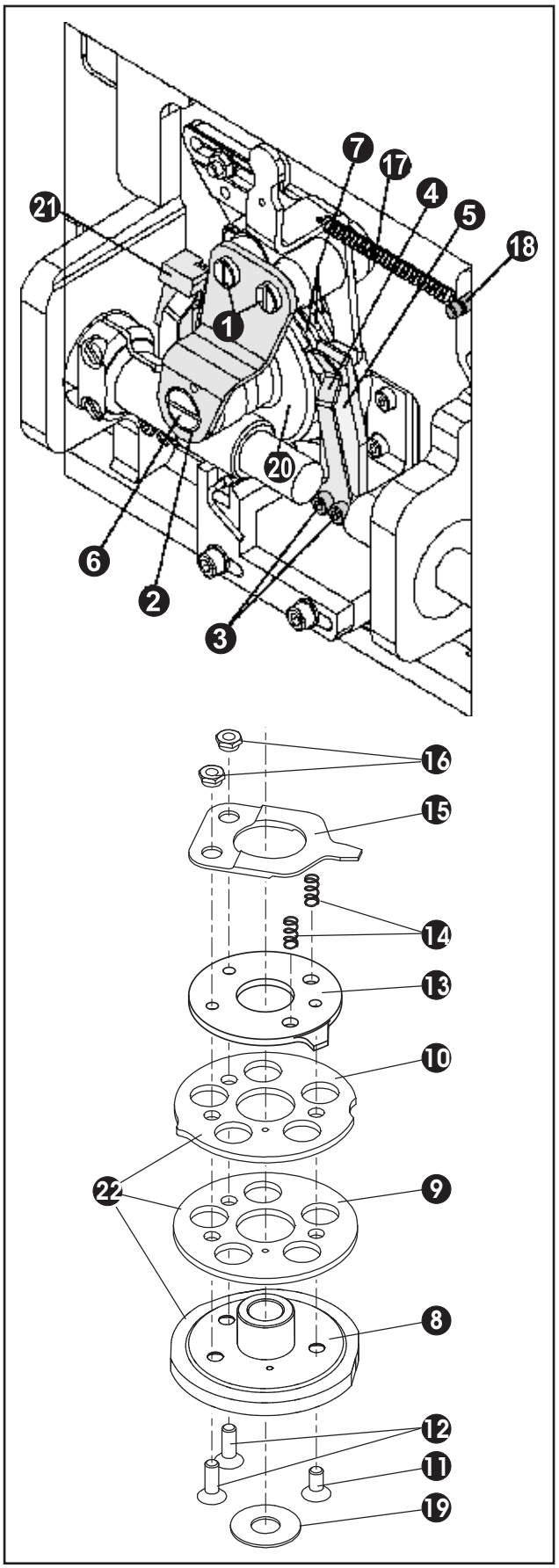

F - MACHINE MAINTENANCE

Warning: - Check for damage to electrical cables
- Check safety covers for damage and replace if needed immediately
- Keep your hands out of the sewing area
- Do not modify the machine in any way, which could eliminate safety parts
- Do not attach external lights or other devices to the machine´s electrical system

Caution: - Do not neglect periodic maintenance.
- If you have fault in electrical power supply, switch off the operating switch (circuit breaker).
- Do not damage, correct and remove safety labels.
- Do not work with the machine when you are under the influence of the drugs or alcohol.
- User has to ensure the lighting of the working area minimal 750 Luxes.

1. MACHINE CLEANING AND MAINTENANCE

1. Switch the power off and disconnect air supply.
2. For cleaning and oiling, remove the cover ❶ and take out the clamp feet mechainsm ❷. Clean the clamping area from the fabric and thread lints.
3. Open the needle bar cover ❸ and clean the thread lints from the guides ❹ and thread tension ❺.
4. Clean the thread lints and fabric from the sewing area - throat plate, loopers.
5. Lubricate the machine according to the section **G 4**.

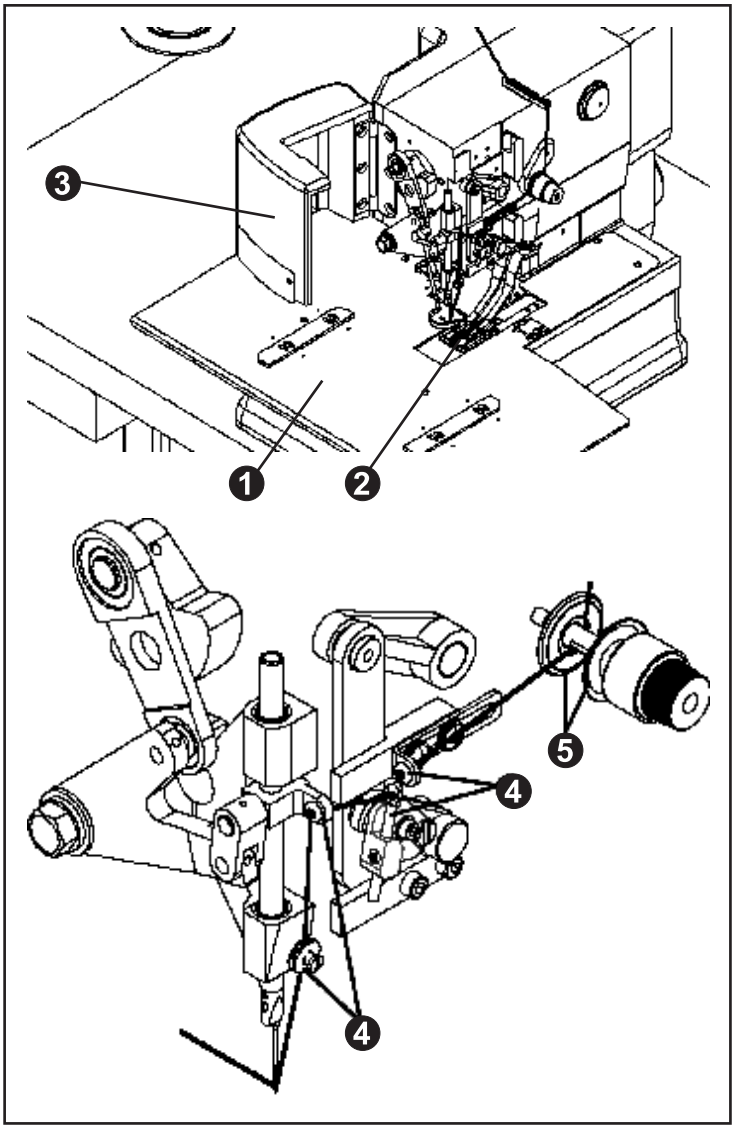

Revised:12/2020
E-mail: info@amfreece-cars.cz

F - MACHINE MAINTENANCE

6. Remove the filter cover ❻ with cleaning pad ❼. Remove the dust from the cleaning pad or in case of considerable dirt, wash it using a mild detergent. Perform the same cleaning on the rear fan .
7. The filter and regulator maintenance Bowl assembly - polycarbonate bowls may be damaged and possibly fail if exposed to synthetic oils, thinner solvents, trichlorethylene, kerosene and other aromatic hydrocarbons. Clean only with a neutral detergent . Auto drain - Drain line length should be shorter than 5 m. Be sure not to have any upward turns in the drain line which would prevent drainage.

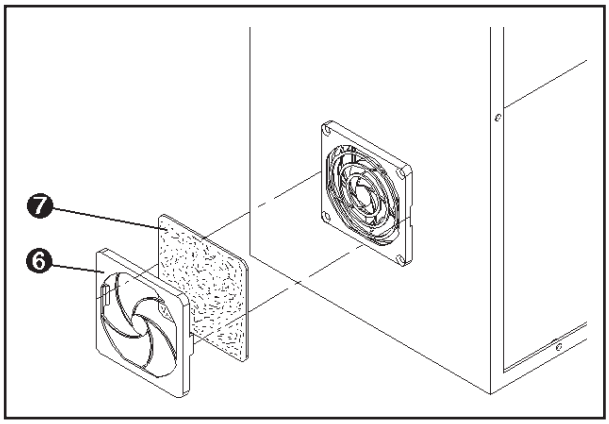

If the unit has no function it is necessary to:
a. check if the supplied pressure is higher than the set pressure of the regulator
b. check if the valve assembly is clean
c. check the membrane or spring because of damage
d. check if the air flow direction is correct

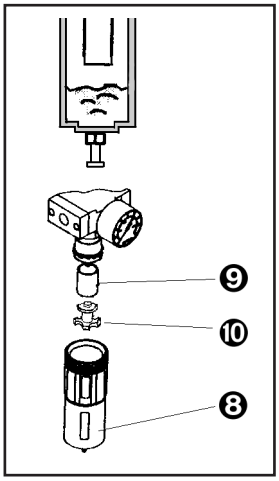

Change of the filter element
Conditions
- low flow rate
- high pressure drop
- when the pressure drops to 0.7 bar
- filter element change after one year (in case it has not been changed)

a. unscrew the polycarbonate bowl ❽
b. take the filter element out ❾ with baffle ❿
c. change old filter element with new one
d. fit the baffle ❿ into new filter element ❾ and place them both back
e. place the polycarbonate bowl back

8. Check the mechanisms especially in the sewing area by sight.
9. When the maintenance and checking are finished, insert the clamp feet mechanism to the machine.

F - MACHINE MAINTENANCE

2. PERIODIC MAINTENANCE

once a day (8 hours of operation)
- cleaning of the sewing mechanism area and inner frame of the
- machine
- lubrication of mechanisms - see area **F4**.

once a week *(40 hours of operation)*
- visual check - external and internal mechanisms
- fill oil into reservoir with oil level indicator, or sooner if required

once a month (160 hours of operation)
- check of the clearance in sewing mechanism drive
- check of the screw connections tightening (obtain values below)
- check of condensate in regulator
- check of dirty of cleaning pads in control box

Recommended values for screws freeze (Nm)			
		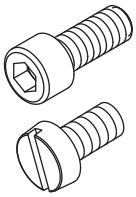	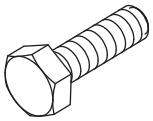
M3	0,5	0,6	0,8
M4	1,2	1,5	2,0
M5	2,5	3,0	4,0
M6	4,0	5,0	7,0
M8		8,0	16,0
M10		10,0	30,0

Revised:12/2020
E-mail: info@amfreece-cars.cz

F - MACHINE MAINTENANCE

3. LUBRICATION DIAGRAM

The machine is mostly equiped with needle and ball bearings, which in combination with single lubrication circuit decrease the requirements for maintenance.

Circuit I - with the oil supply in oil indicator for lubrication of the bite, feeding and looper levers and worm gears. In case of replacement of any part of distribution, it is possible to order the tube kits and wicks. To connect the tubes - see picture.

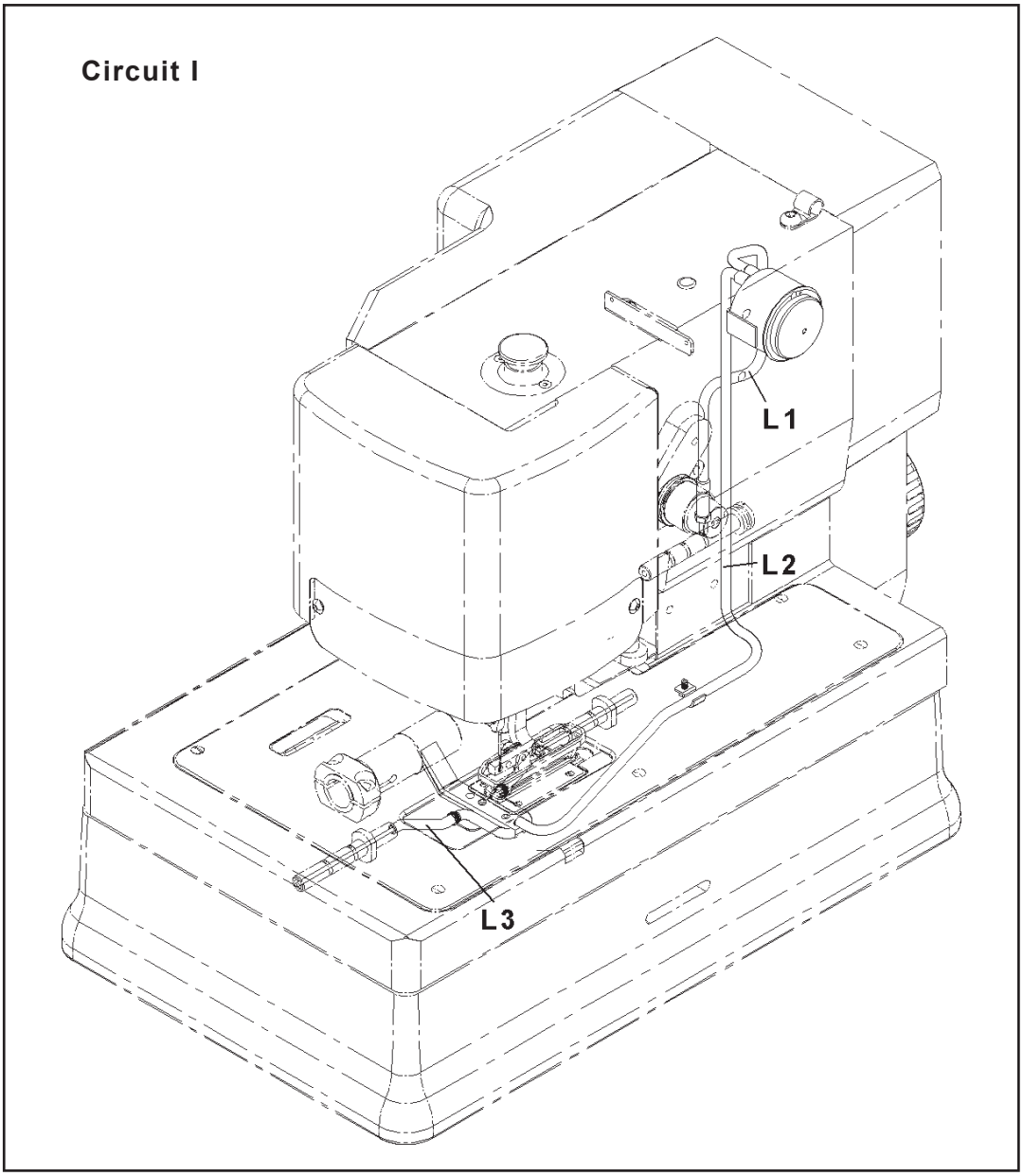

F - MACHINE MAINTENANCE

4. MACHINE LUBRICATION

1. It is necessary to lubricate the places shown below before the machine is switched on for the first time or after a long idle period. Use oil ESSO TERESSO 32 or similar quality.
2. The amount of oil in the reservoir ❶ is indicated by the red mark. Too much oil may cause its overflowing from the base area.
3. The reservoir is fitted through the hole ❷ in front of the gage.
4. The points for lubrication of the needle bar mechanism ❸ and draw-off mechanism ❹ are shown in the illustration below (after opening the needle bar cover ❺). Lubricate the main cam worm gear through the hole ❻. Lubricate all of these points every 8 hours.

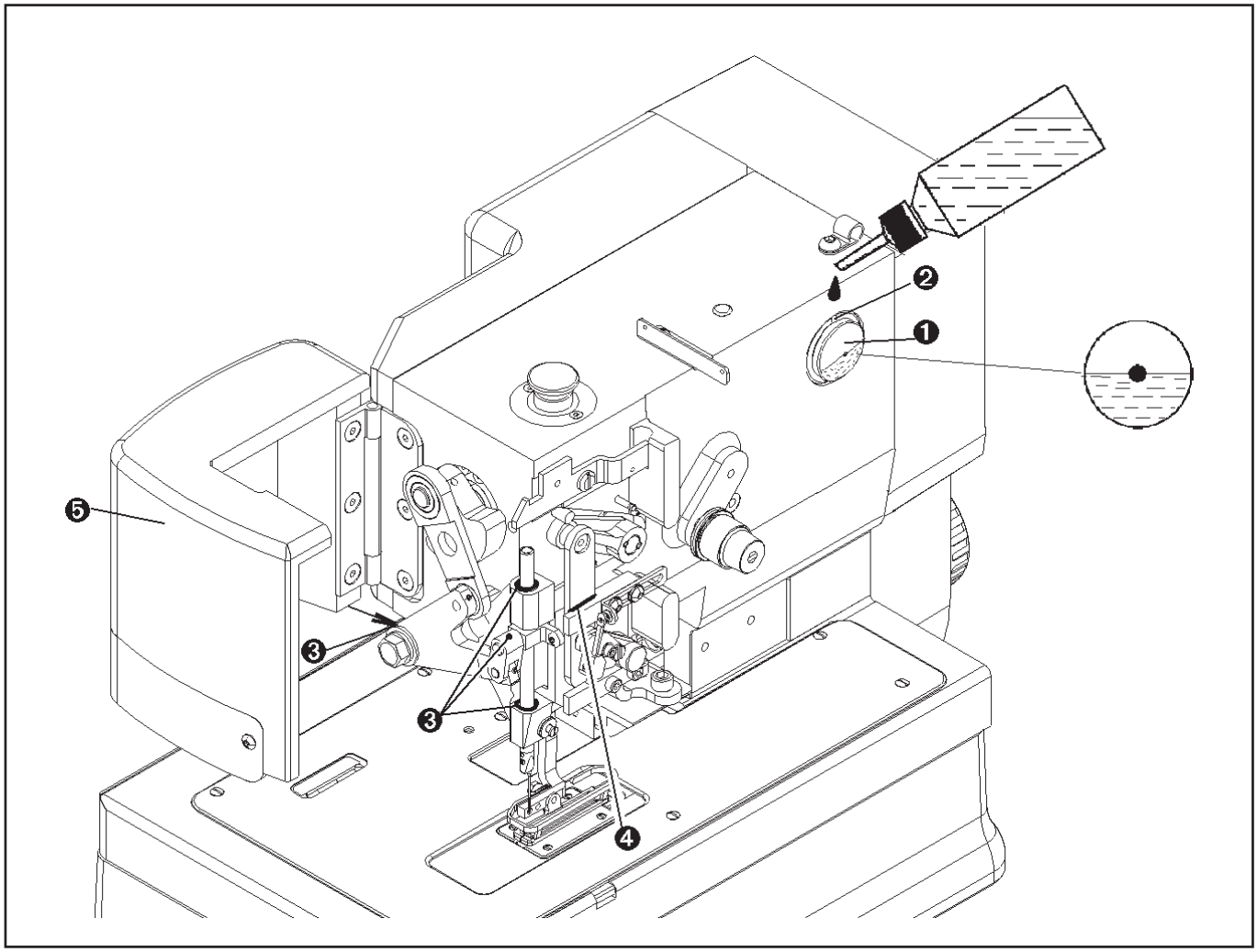

F - MACHINE MAINTENANCE

5. Tilt the machine head on the rest pin and lubricate the places shown in the picture.

❼ Looper shafts
❽ Roller
❾ Shifter
❿ Bevel gears
⓫ Looper cam surfaces
⓬ Feed cam surfaces
⓭ Bite cam surfaces
⓮ Trimmer shaft

6. After lubrication it is important to sew minimum 10 buttonholes on scrap fabric to dispel any excess oil. Wipe all visible excess oil from the mechanism in the work area.

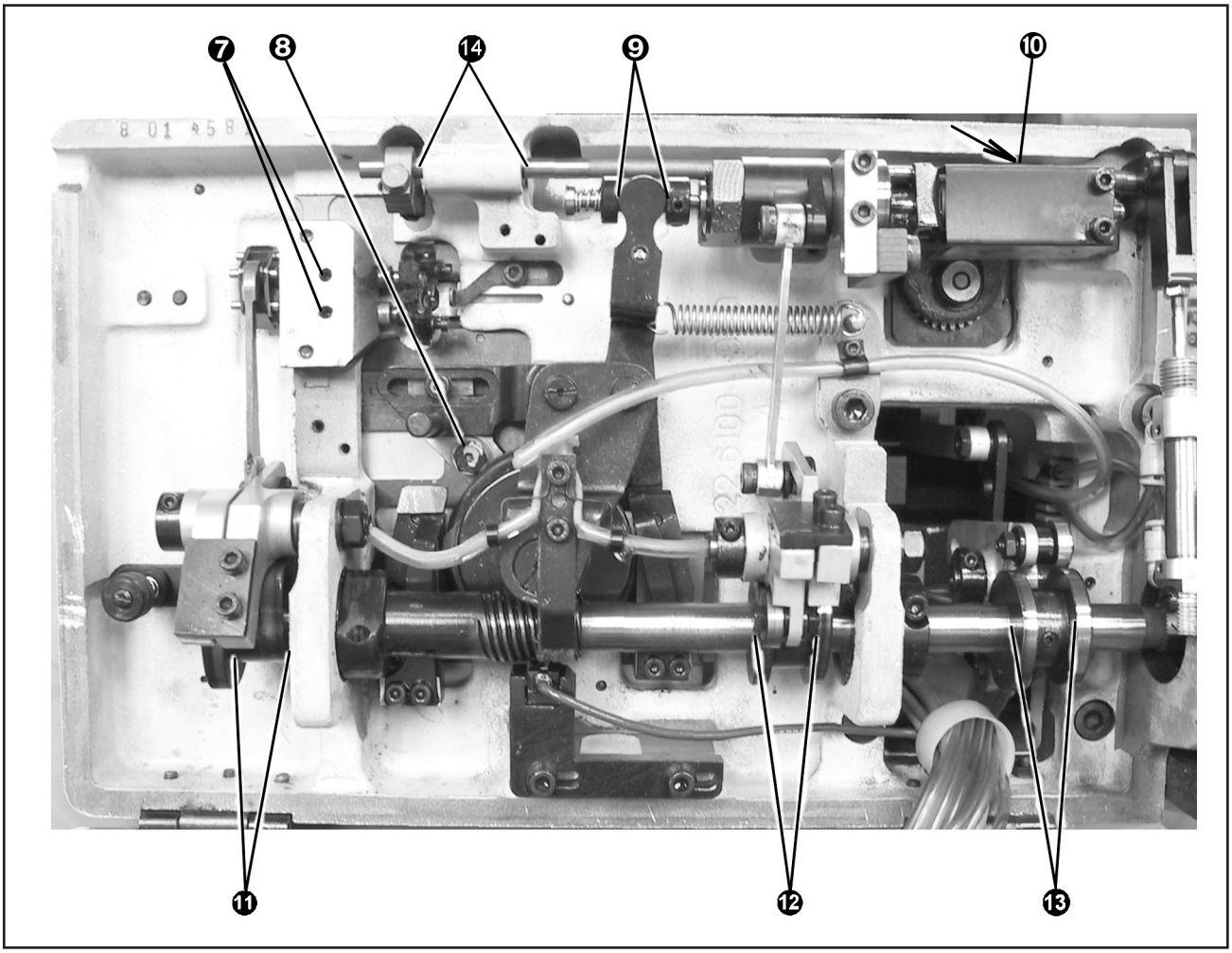

F - MACHINE MAINTENANCE

5. MACHINE DISPOSAL

1. To ensure machine ecological disposal, it is necessary to remove nonmetallic parts from the machine. To take these parts out, it is necessary to perform the partial dismantling of the machine, remove covers, dismantle the machine arm and remove the frame.
2. Aluminium and diralumin parts must be treated separately, also nonferrous metal parts and plastic parts.
3. Parts mentioned in point 2 can be found in the spare parts manual with these marks:

●	aluminium parts
●●	non-ferrous metal parts
●●●	plastic and non-metalic parts

G - PNEUMATIC DIAGRAM

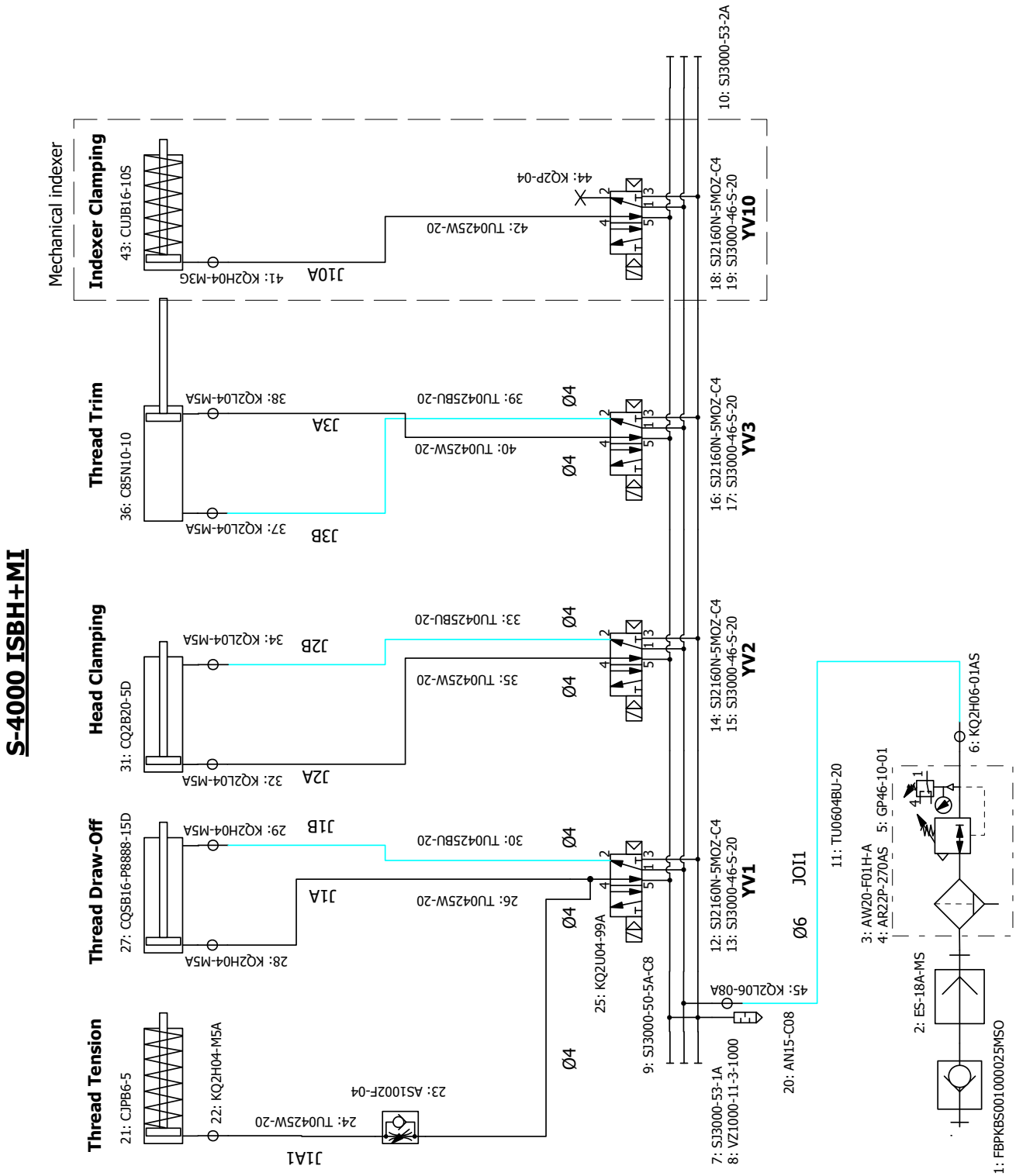

H - ELECTRICAL DIAGRAM

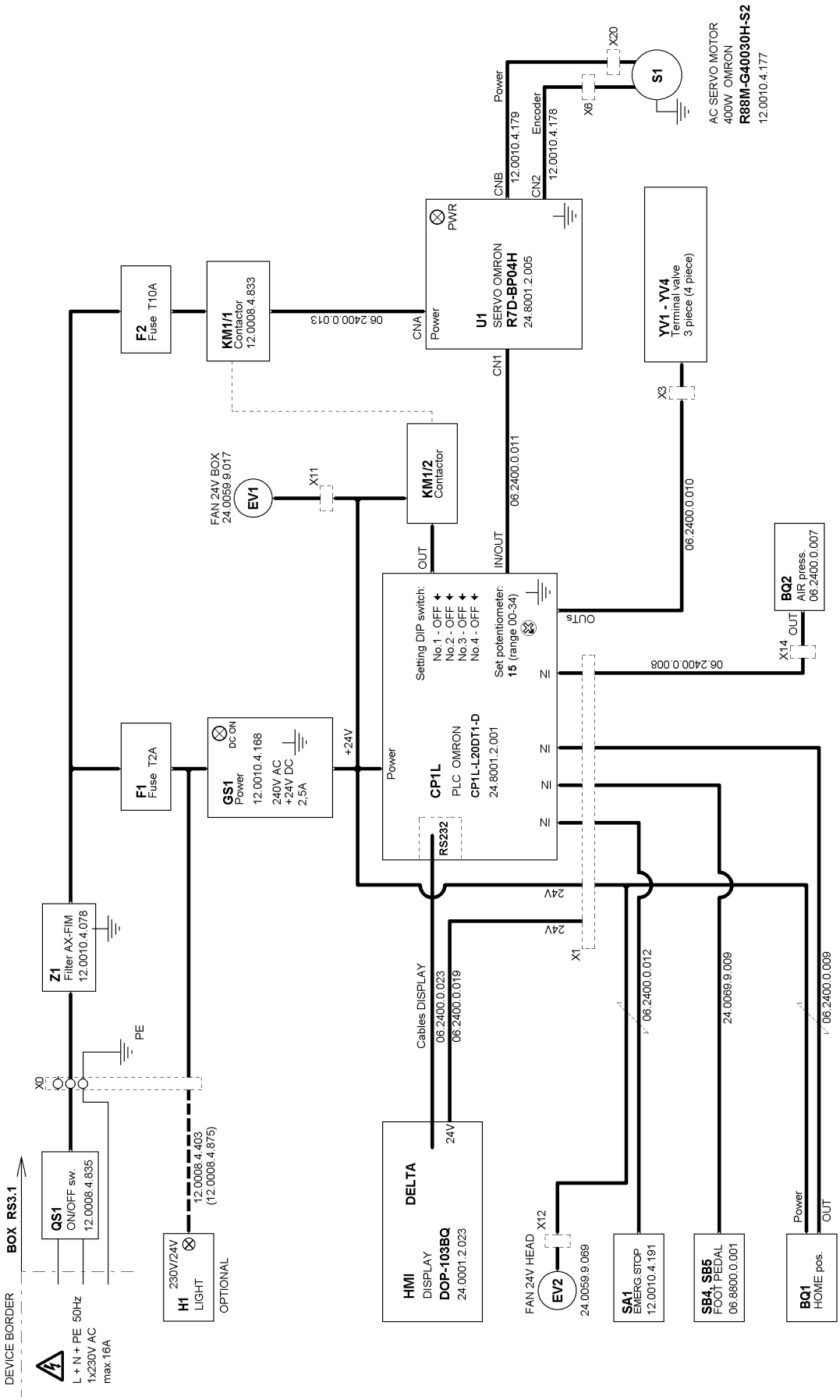

H - ELECTRICAL DIAGRAM

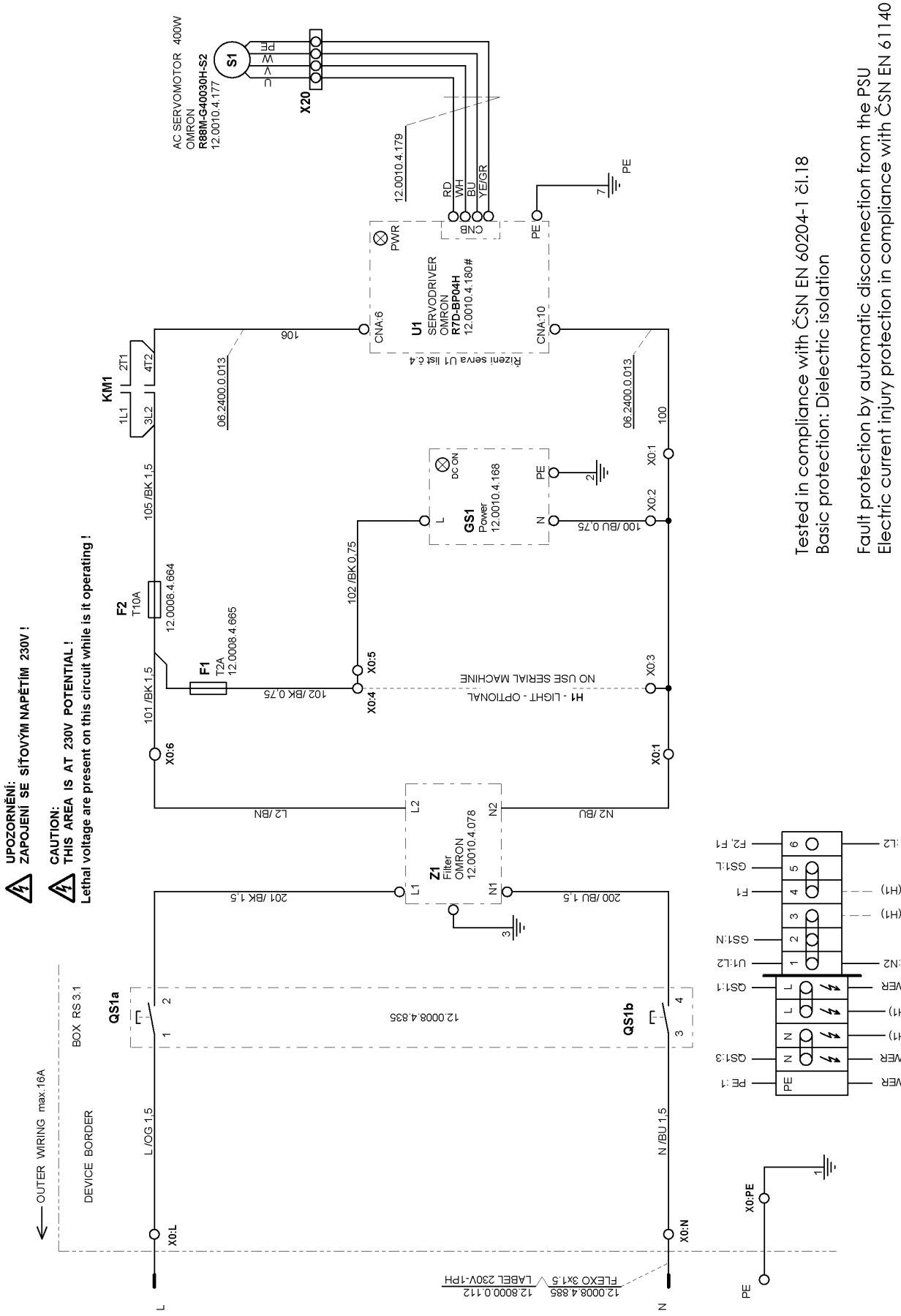

Tested in compliance with ČSN EN 60204-1 čl.18
Basic protection: Dielectric isolation

Fault protection by automatic disconnection from the PSU
Electric current injury protection in compliance with ČSN EN 61140

H - ELECTRICAL DIAGRAM

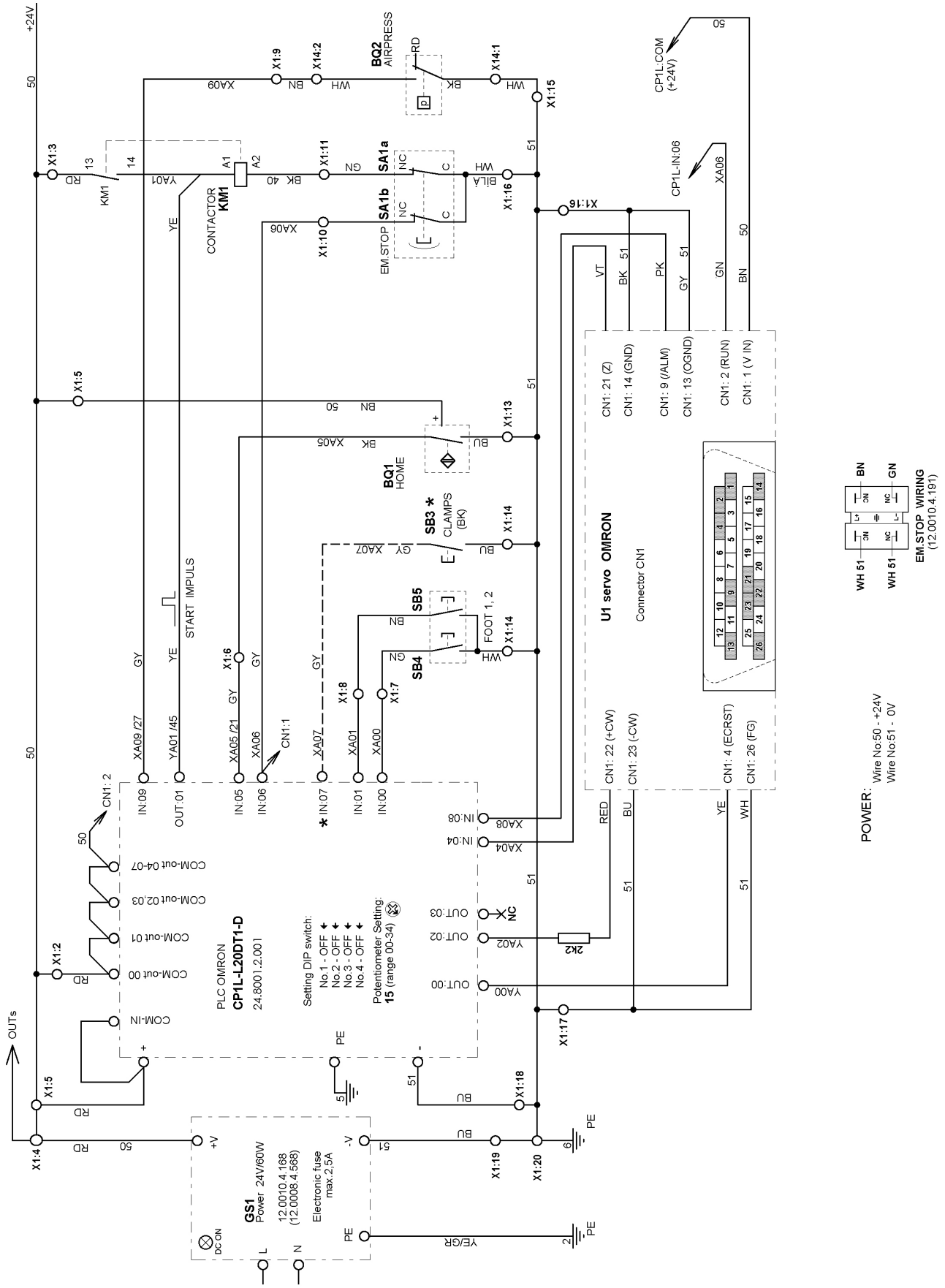

Revised:12/2020
E-mail: info@amfreece-cars.cz

H - ELECTRICAL DIAGRAM

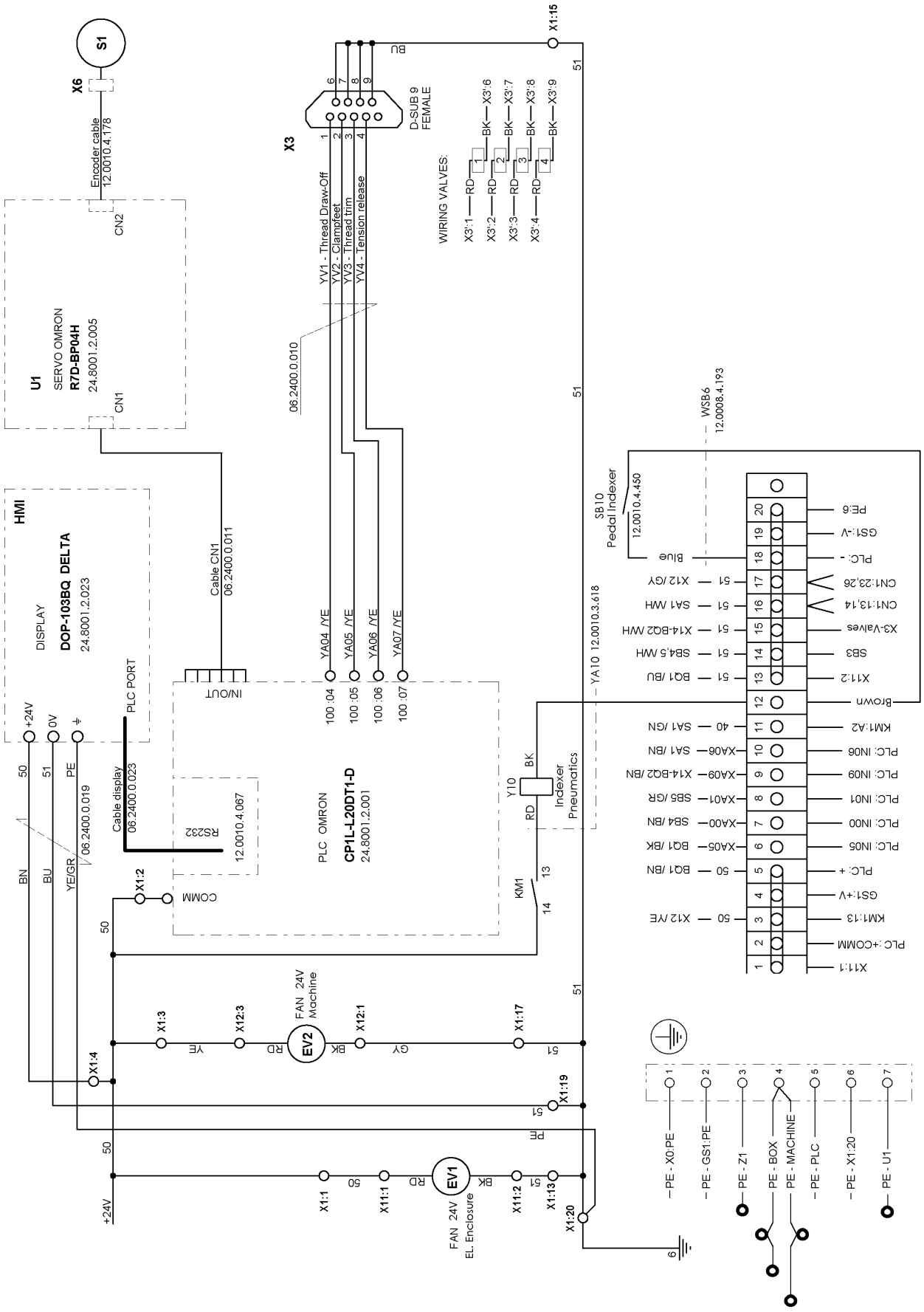

H - ELECTRICAL DIAGRAM

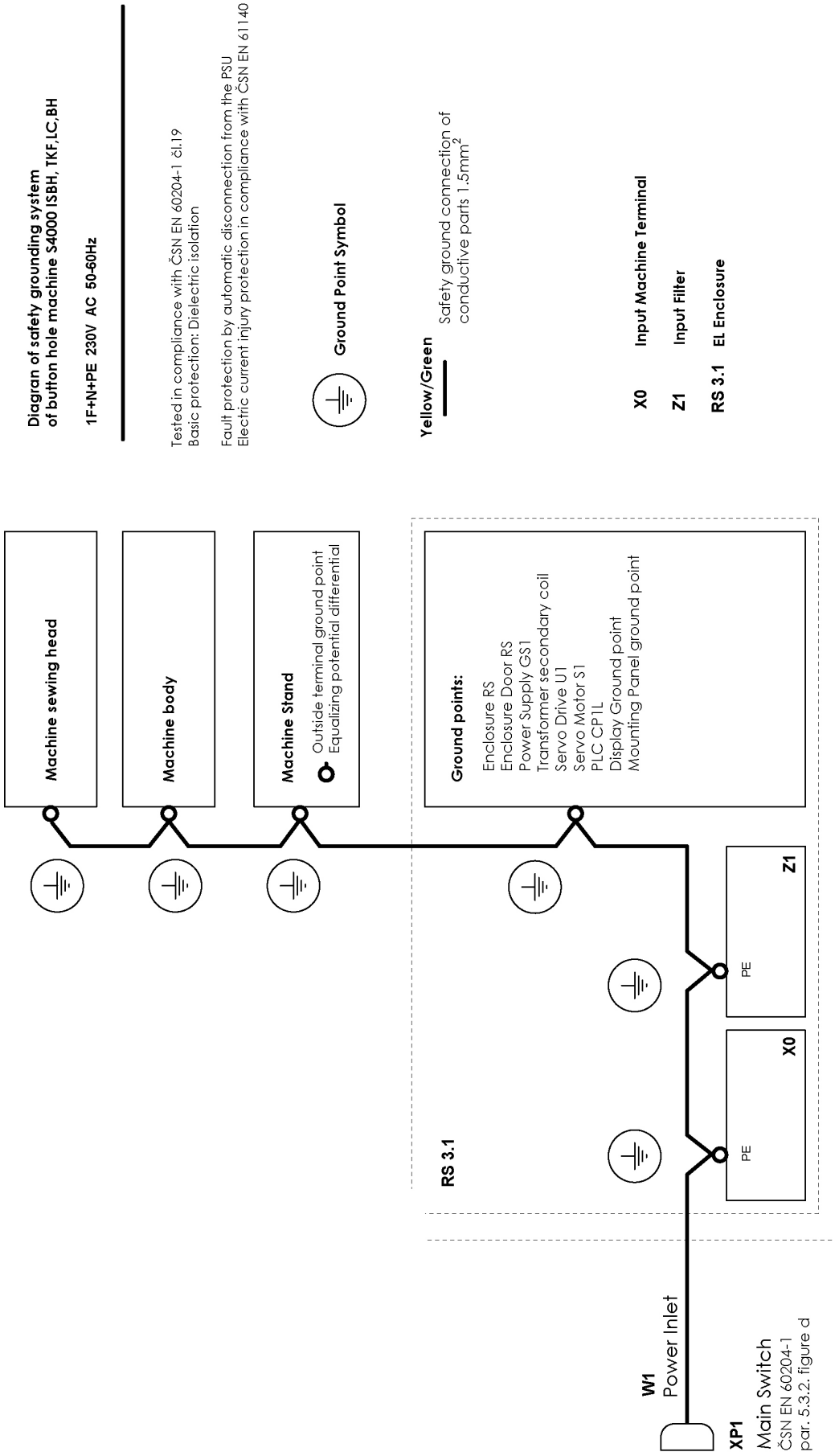

TROUBLESHOOTING

1. MECHANICAL FAULTS 2
2. ERROR MESSAGES OF THE CONTROL PANEL DISPLAY 5
3. ERROR MESSAGES OF THE SERVO 6
4. ELECTRICAL FAULTS 7

TROUBLESHOOTING

1. MECHANICAL FAULTS

SYMPTOM	POSSIBLE CAUSE	PROBABLE SOLUTION
Thread breakage	Needle, looper, throat plate damaged	Change damaged parts
	Incorrect needle and sewing mechanism adjustment	Check the adjustment of the mechanisms
	Thread tension is too tight	Adjust correct tension
	Incorrect threading	See section C3 for checking.
	Thread guides polished incorrectly	Polish
	Poor thread quality	Replace thread
	Thread is too heavy for selected needle and throat plate	Use recommended thread sizes - see section A4
Machine fails to sew	Needle, looper, throat plate damaged	Change damaged parts
	Incorrectly adjusted needle bar height	See section E4 for checking
	Incorrectly adjusted clearance between needle and throat plate	See section E5 for checking
	Incorrect loopers timing	See section E12 for checking
Machine sews in one spot	Incorrectly adjusted front stop	Adjust the stop - see section E11

Revised: 12/2020
E-mail: info@amfreece-cars.cz

TROUBLESHOOTING

SYMPTOM	POSSIBLE CAUSE	PROBABLE SOLUTION
Stitch skip at the beginning of sewing	Needle, looper, throat plate damaged	Change damaged parts
	Needle thread end is too short	See section E13, point 2
	Incorrectly adjusted needle bar height	See section E4
	Incorrectly adjusted clearance between needle and throat plate	See section E5
	Incorrect loopers timing	See section E12
	Incorrectly adjusted clamp feet pressure	See section E 16, point 3
Stitch skip during sewing	Needle, looper, throat plate damaged	Change damaged parts
	Incorrectly adjusted needle bar height	See section E4
	Incorrectly adjusted clearance between needle and throat plate	See section E5
	Incorrect loopers timing	See section E12
	Incorrect thread tension adjustment	Adjust the tension correctly
	Incorrect threading	See section C3
	Thread loops are too small	See section E13 point 3
	Incorrectly adjusted clamp feet pressure	See section E16 point 1
	The clamp feet are adjusted too far from the sewing	See section E16 point 2

TROUBLESHOOTING

SYMPTOM	POSSIBLE CAUSE	PROBABLE SOLUTION
Thread not trimmed at the end of the cycle	Trimming knife damaged	Replace
	Low air pressure at trimming cylinder	Check supply pressure
	Flow control valve to tension cylinder closed	See section E14 point 3
	Incorrect loopers timing	See section E12
	Incorrect setting of trimming delay	Change Trim delay parameter
	Trimming length incorrectly set	Change Trim time parameter
Sewing motor turns, machine does not sew	Belt broken or loose	See section E18 for changing
Machine sews continually, does not stop	Stopping sensor adjusted incorrectly	See section E17 for correct position adjustment
Zero pressure on regulator	Shut off valve closed	Open the shut off valve
Low air pressure	Filter element dirty	Change the filter element
	Air fitting or tubing obstruction	Check supply guides

Revised: 12/2020
E-mail: info@amfreece-cars.cz

TROUBLESHOOTING

2. ERROR MESSAGES OF THE CONTROL PANEL DISPLAY

SYMPTOM	POSSIBLE CAUSE	PROBABLE SOLUTION
Low air pressure	Hand valve of the regulator switched off - if assembled	Open the hand valve
	The air pressure in the air supply piping below 5 MPa	Increase the air pressure
Emergency stop	Emergency Stop button is switched on	Release the Emergency Stop button
Operation mode	The machine is in the operation mode, motor is disconnected	Press F6 key on the control panel
Low voltage	The power supply is below 185V - relay HRN-35 is installed	Call electroengineer in a plant
Motor not ready	The power supply is below 185V - relay HRN-35 is not installed	Call electroengineer in a plant

3. ERROR MESSAGES OF THE SERVO

The following messages can be seen on the servo display, which is placed inside the control box. In order to eliminate these messages, switch off the machine for 1 minutes. Then switch the machine on again. The error message should not appear on the display. If the message appears - call AMF Reece service.

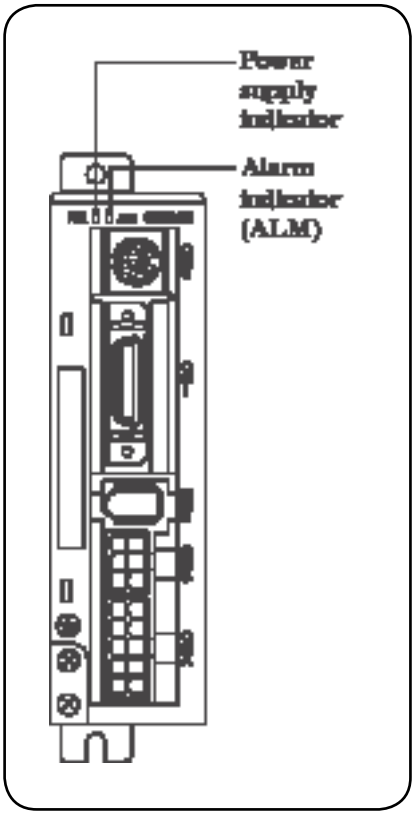

PWR - Power supply indication:

INDICATOR	STATUS
Lit green	Voltage is good
Lit orange - Flashes at a 1 sec. intervals	Varning - i.e.: - Exceeded power - Exceeded feed back - Default of inner fan
Lit red	Alarm - default

ALM - Default indication (Alarm indicator):
in case default appears, the indicator is switched on.

TROUBLESHOOTING

4. ELECTRICAL FAULTS

SYMPTOM	POSSIBLE CAUSE	PROBABLE SOLUTION
When switch in position I neither the work light, display or the cooling fan operate	No power supply	Check main power supply or voltage in the socket
	Fuse F1 failure	Replace fuse PN 12.0008.4.665
	Power switch QS1 damaged	Replace the switch 12.0008.4.835
	Power GS1 failure	Replace the power 12.0010.4.168
	The supply voltage is above 255 V - relay VC1 installed	Call electroengineer in the plant
	Relay VC1 failure	Replace the relay 12.0008.4.690
	Damaged Z1 filter	Replace the filter 12.0010.4.078
When switch in position I, display does not operate	Cable from the display disconnecte	Check the display connection
	Display or its control damaged	Replace display PN 24.8001.2.002
When sewing operation started, motor does not operate. Contactor KM1 switched on	Fuse F2 damaged	Replace fuse 12.0008.4.664
	Contactor KM1 damaged	Replace contactor 12.0008.4.833
	Servo U1 error or filter Z2 error	Call AMF Reece service or replace servo U1 24.8001.2.005
	Error in sewing motor circuit	Switch the machine off for 1 minute, or restart it, alternatively call AMF Reece service
When the machine is switched on, incorrect type of the machine appear on the display (example: S4000 ISBH instead of S4000 BH)	The PLC incorrectly set	Set the potenciometer on the PLC according to the electrical diagram - see service section, section H)

TROUBLESHOOTING

SYMPTOM	POSSIBLE CAUSE	PROBABLE SOLUTION
When sewing operation started, motor fails to operate. Contactor KM1 switched off.	Make sure the machine is ready for operation	Press key F6 - see D1, point 6
	Contactor KM1 damaged	Replace contactor 12.0008.4.833
	Check the Emergency Stop button	Replace button 12.0008.4.563
	Control unit PLC error	Replace the control unit PLC 24.8001.2.001
The needle does not stop in the upper position	Position of the sensor BQ1 incorrectly adjusted	Adjust according to section E17
	Sensor BQ1 failure	Replace the sensor 06.2400.0.009
	Check the servo amplifier and servo	To set the servo amplifier - call AMF Reece service, alternatively replace motor 12.0010.4.177 and servo amplifier 24.8001.2.005
When sewing operation started, air valves do no operate. The air pressure correct.	Fork is not fitted properly into connector X3	Check the connector X3 connection
	Control unit PLC error	Replace the control unit 24.8001.2.001

Revised: 12/2020
E-mail: info@amfreece-cars.cz

TABLE OF CONTENTS

NEEDLE BAR 3-2
CLAMPING 3-4
THREAD TRIMMER 3-6
SHIFTER MECHANISM 3-8
FEED MECHANISM 3-10
LOOPER MECHANISM 3-14
BASE 3-16
BITE MECHANISM 3-18
THREAD DRAW-OFF MECHANISM 3-20
MAIN CAM 3-22
HEAD ASSEMBLY 3-24
BEDPLATE 3-26
COVERS 3-28
LUBRICATION 3-31
TABLE 3-32
TABLE EMBEDDED - ISBH 3-34
TABLE - ROLLER KIT - EXTRA PARTS 3-36
ELECTRICAL - I 3-38
ELECTRICAL - I TABLE EMBEDDED 3-42
ELECTRICAL - II 3-46
ELECTRICAL - III 3-48
PANEL KIT 3-50
PNEUMATICS 3-52
ACCESSORIES 3-54
ACCESSORIES EXTRA PARTS 3-56
MECHANICAL INDEXER - LINEAR GUIDE - EXTRA PARTS 3-58
MECHANICAL INDEXER - CROSS LEVER ASSEMBLY - EXTRA PARTS 3-60
MECHANICAL INDEXER - CLAMPING CONNECTING PARTS - EXTRA PARTS 3-62
MECHANICAL INDEXER - CLAMPING ASSEMBLY - EXTRA PARTS 3-64
MECHANICAL INDEXER - BASE - EXTRA PARTS 3-66
MECHANICAL INDEXER - RANGE MECHANISM - EXTRA PARTS 3-68
MECHANICAL INDEXER PEDAL - EXTRA PARTS 3-70
RECOMMENDED SPARE PARTS 3-72

NEEDLE BAR

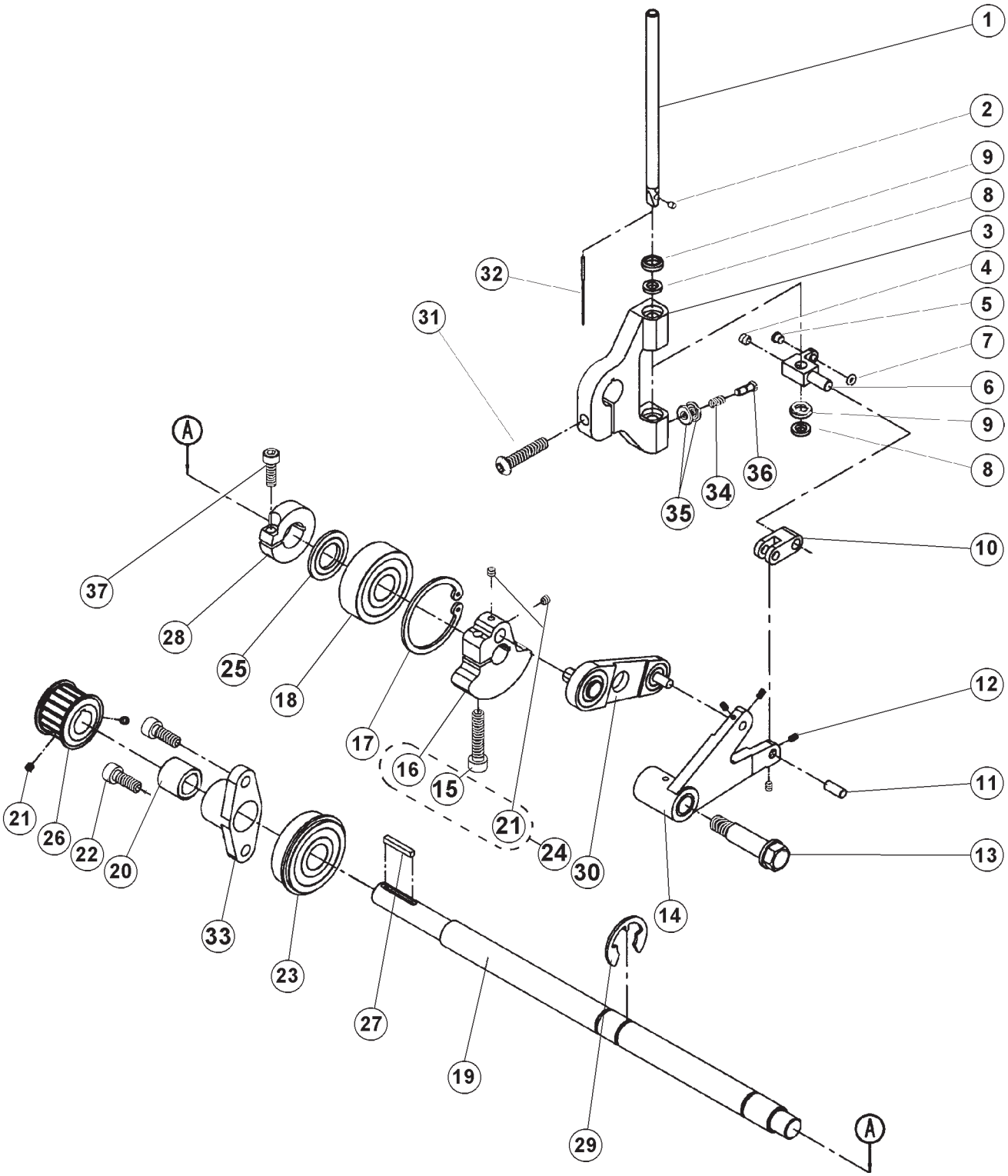

Revised: 06/2023
E-mail: info@amfreece-cars.cz

NEEDLE BAR

DET	PART NUMBER	DESCRIPTION		QTY.
01	22.0195.0.000	Needle Bar		1
02	01.2193.0.000	Screw 4-60		1
03	24.0510.0.000	Needle Bar Holder	●	1
04	08.6400.5.005	Set Screw M5 x 5		1
05	01.7447.1.000	Porcelain Guide	●●●	1
06	22.0520.0.000	Needle Bar Clamp		1
07	01.6551.0.000	Retaining Ring	●●●	1
08	22.0230.0.000	Cupped Washer	●●●	2
09	22.0239.0.000	Felt Washer		2
10	22.0530.0.000	Needle Bar Connecting Link		1
11	22.0542.0.000	Needle Bar Connecting Link Pin		1
12	08.6400.3.005	Set Screw M3 x 5		4
13	22.0541.0.000	Needle Bar Shoulder Screw		1
14	22.0540.0.000	Needle Bar Connecting Link Pin	● ●●	1
15	08.6000.6.030	Screw M6 x 30		(1)
16	22.0525.0.000	Needle Bar Crank	●	(1)
17	01.7809.0.000	Retaining Ring		1
18	01.7804.0.000	Top Shaft Bearing		1
19	24.0500.0.000	Needle Bar Drive Shaft		1
20	12.2050.0.003	Bearing		1
21	08.6400.4.004	Set Screw M4 x 4		2 (2)
22	08.6000.6.016	Screw M6 x 16		2
23	01.7805.0.000	Shaft Bearing		1
24	22.0525.0.050	Needle Bar Crank Asm.		1
25	22.0545.0.000	Washer		1
26	24.0048.0.000	Needle Bar Drive Pulley	●	1
27	22.0175.0.000	Drive Shaft Key		1
28	24.0002.0.000	Clamp Collar		1
29	12.1045.2.001	Retaining Ring		1
30	22.0535.0.100	Needle Bar Crank Link Asm.	●	1
31	08.6000.6.025	Screw M6 x 25		1
32	02.0750.2.110	Needle		1
33	24.0001.0.000	Bearing Carrier Upper Shaft		1
34	17.0026.2.077	Spring		1
35	17.0082.8.017	Tension Disk		2
36	24.0100.0.000	Screw M3.5 x 0.35-11		1
37	08.6000.5.016	Screw M5 x 16		1

CLAMPING

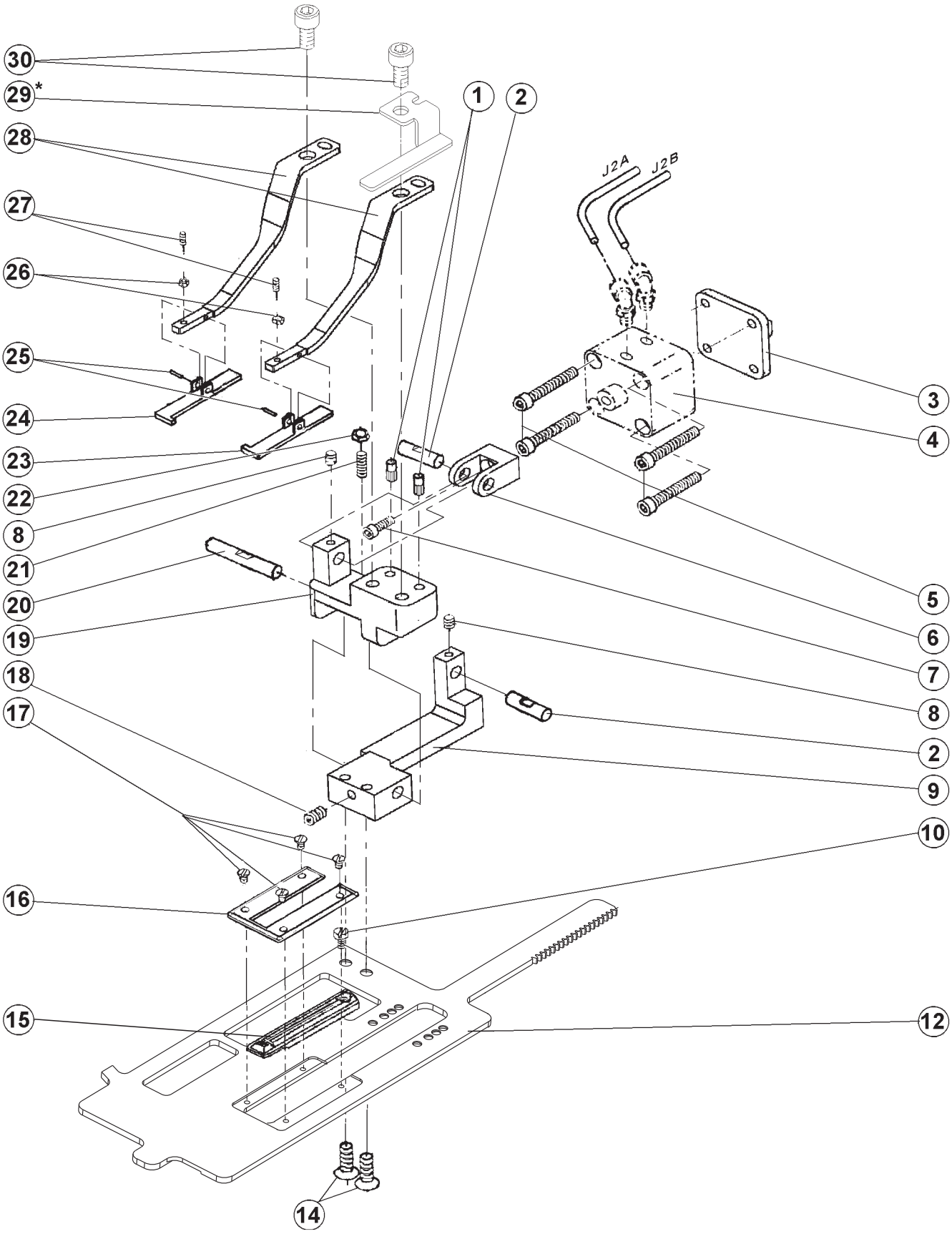

Revised: 06/2023
E-mail: info@amfreece-cars.cz

CLAMPING

DET	PART NUMBER	DESCRIPTION	QTY.
01	07.6045.0.046	Pin	2
02	22.0173.0.000	Clamp Toggle Pivot Pin	2
03	24.0036.1.000	Cylinder Mounting Bracket	1
04	See Page 3-53	Cylinder	—
05	08.6002.5.022	Screw M5 x 22	4
06	24.0035.1.000	Cylinder Clevis	1
07	08.6002.5.012	Screw M5 x 12	1
08	08.6402.4.004	Set Screw M4 x 4	2
09	24.0158.1.000	Tail Bracket Clamp	1
10	01.2084.0.000	Fill. Screw 6-52	1
12	24.3028.1.000	Clamp Plate	1
14	08.6100.5.012	Screw M5 x 12	2
15	22.3034.0.000	Throat Plate	1
16	22.0164.0.000	Clamp Mat	1
17	01.2376.0.000	Screw 4-60	4
18	08.6402.5.008	Set Screw M5 x 10	1
19	24.3026.0.000	Tail Pivot Clamp	1
20	22.0159.0.000	Tail Pivot Clamp Pin	1
21	08.6402.4.012	Set Screw M4 x 12	1
22	08.6702.4.000	Nut M4	1
23	22.0224.0.000	R.H. Clamp Foot	1
24	22.0223.0.000	L.H. Clamp Foot	1
25	17.0031.0.460	Roll Pin	2
26	08.6712.3.000	Nut M3	2
27	08.6402.3.006	Set Screw M3 x 6	2
28	22.3029.0.000	Clamp Arm	2
29*	24.4018.0.000	Stop *	1*
30	08.6002.6.008	Screw M6 x 8	2

* Modification — Mechanical Indexer

THREAD TRIMMER

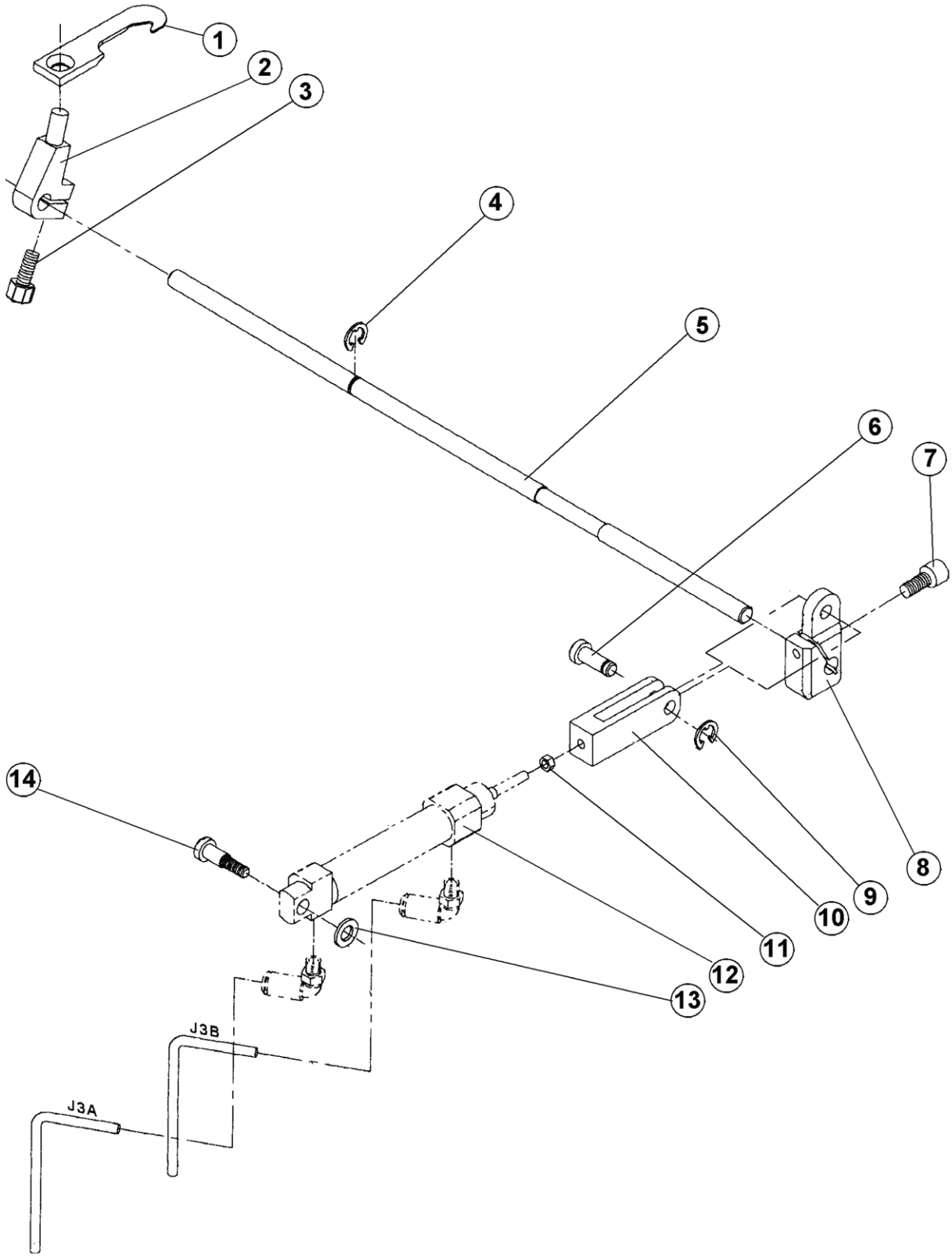

THREAD TRIMMER

DET	PART NUMBER	DESCRIPTION	QTY.
01	20.0093.2.004	Trimmer Hook	1
02	20.0092.0.004	Trimmer Actuator	1
03	01.2386.0.000	Hex Screw 3/16-36 x .5	1
04	12.1045.3.001	E-Clip	1
05	24.0080.0.000	Trimmer Shaft	1
06	24.0003.0.000	Trimmer Pivot	1
07	08.6000.4.012	Screw M4 x 12	1
08	24.0004.0.000	Trimmer Clamp Lever	1
09	07.6045.0.042	E-Clip	1
10	24.0005.0.000	Clevis	1
11	08.6700.4.000	Nut M4	1
12	See Page 3-53	Trimmer Cylinder	—
13	08.6852.6.000	Washer	1
14	24.0006.1.000	Pivot Screw	1

SHIFTER MECHANISM

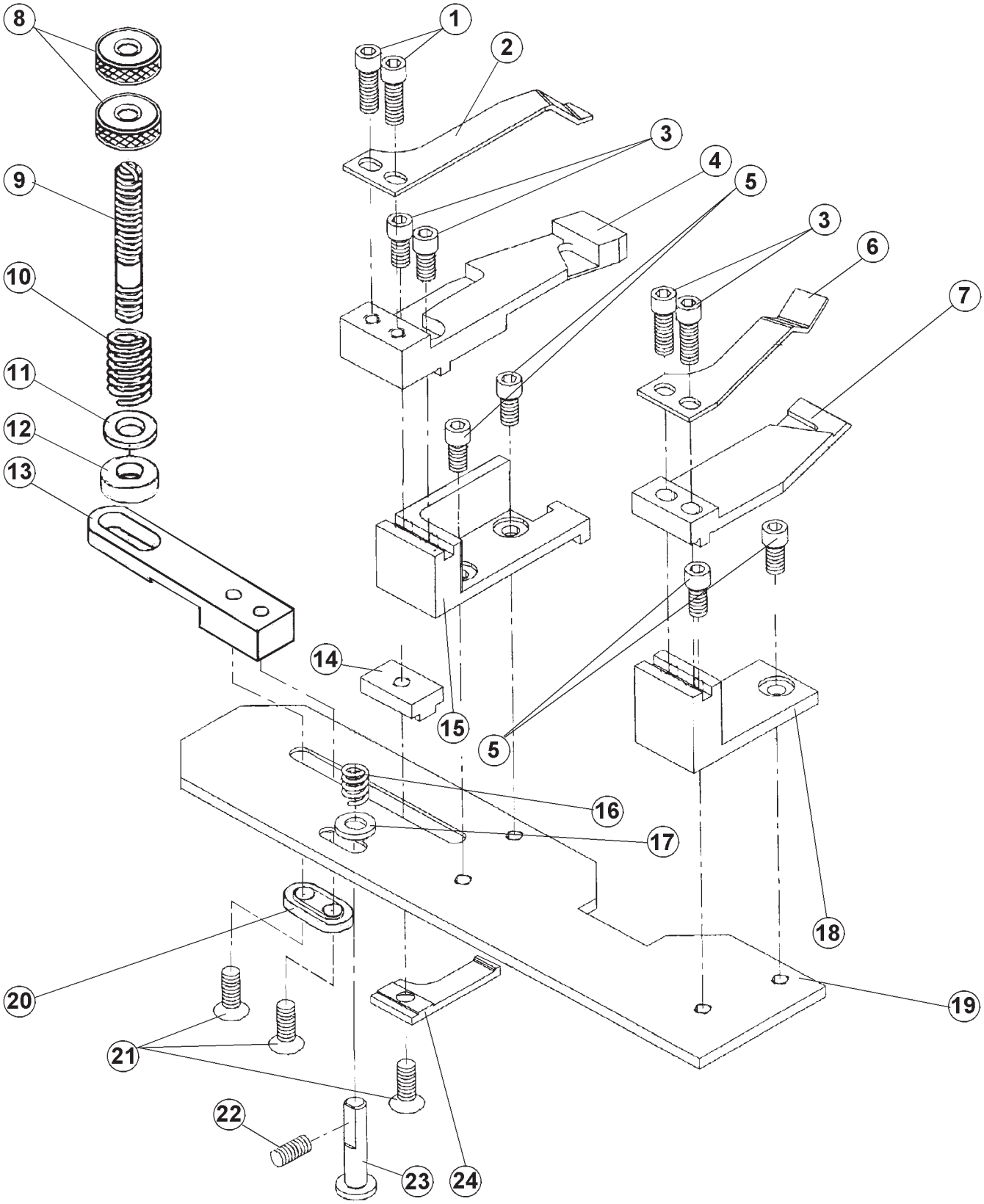

Revised: 06/2023
E-mail: info@amfreece-cars.cz

SHIFTER MECHANISM

DET	PART NUMBER	DESCRIPTION	QTY.
01	08.6000.4.010	Screw M4 x 10	2
02	22.2653.0.000	Left Shifter Arm Spring	1
03	08.6000.4.016	Screw M4 x 16	4
04	22.2652.0.000	Left Shifter Arm	1
05	08.6000.4.005	Screw	4
06	22.2657.0.000	Right Shifter Arm Spring	1
07	22.2656.0.000	Right Shifter Arm	1
08	24.3074.0.000	Nut M6	2
09	24.3073.0.000	Screw	1
10	07.6440.0.032	Spring	1
11	08.6850.6.000	Washer	1
12	24.3075.0.000	Rubber Washer ●●●	1
13	24.3072.0.000	Shifter Brake	1
14	22.0405.0.000	Adjustable Link Nut	1
15	22.2651.0.000	Left Shifter Block	1
16	07.6440.0.040	Spring	1
17	08.6887.5.000	Washer	1
18	22.2655.0.000	Right Shifter Block	1
19	22.2665.0.000	Main Cam Shifter Plate	1
20	24.3071.0.000	Shifter Brake Bracket	1
21	08.6100.4.006	Screw M4 x 6	3
22	08.6400.4.005	Set Screw M4 x 5	1
23	22.0400.0.000	Spring Load Pin	1
24	22.2664.0.000	Buttonhole Adjusting Link	1

FEED MECHANISM

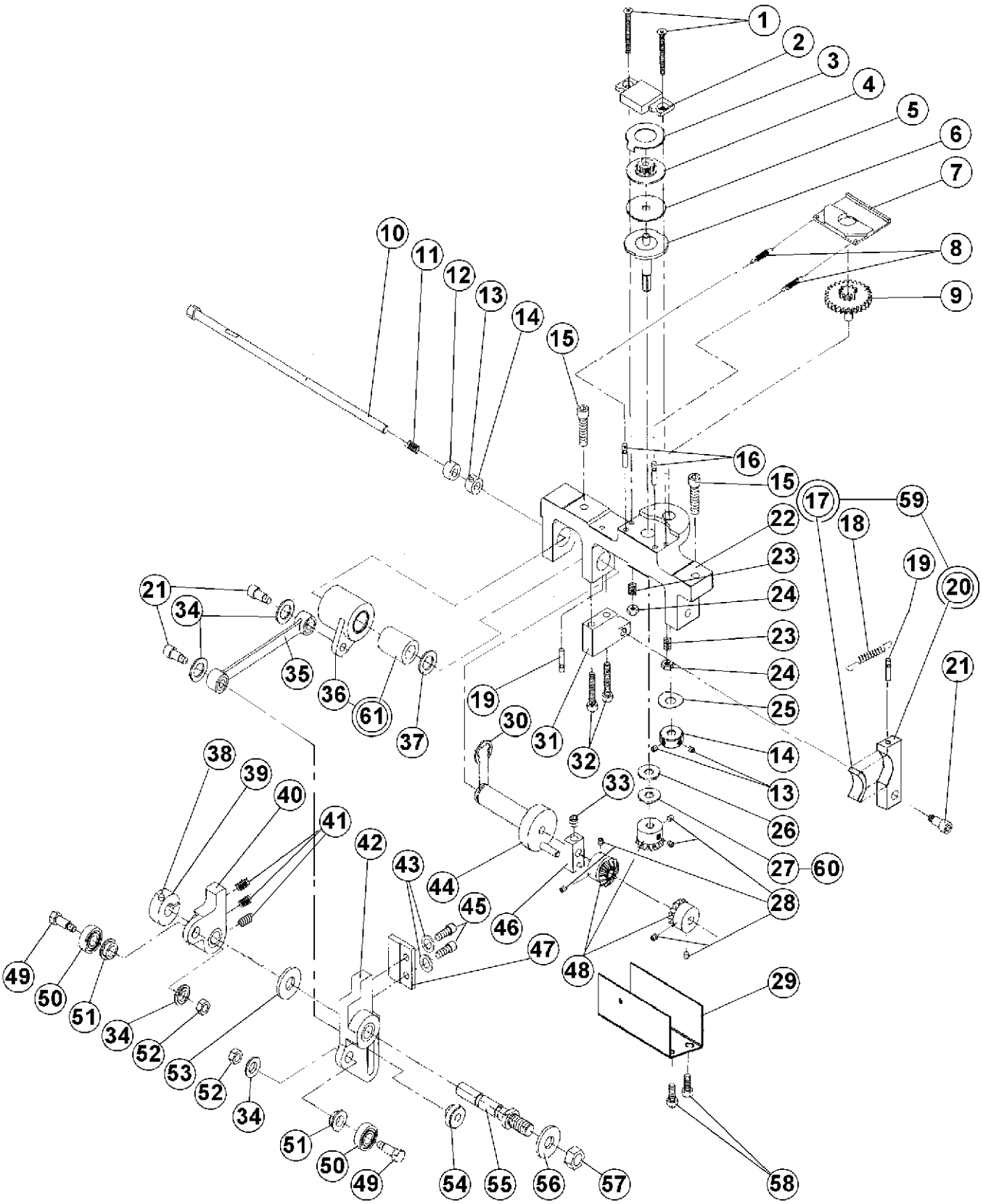

Revised: 06/2023
E-mail: info@amfreece-cars.cz

FEED MECHANISM

DET	PART NUMBER	DESCRIPTION			QTY.
01	08.6100.3.030	Screw M3 x 30			2
02	22.0114.0.000	Feed Brake Pressure Plate			1
03	22.0121.0.000	Slip Clutch Drive Washer			1
04	22.0354.0.000	Slip Clutch Feed Gear			1
05	24.0126.0.000	Friction Washer	●●●		1
06	22.0312.0.000	Slip Clutch Feed Shaft			1
07	22.0061.0.000	Clamp Plate Gear Rack Retainer			1
08	07.6440.0.033	Spring			2
09	24.0351.0.000	Feed Gear Assembly			1
10	22.0325.0.000	Feed Reversing Shaft			1
11	07.6440.0.041	Spring			1
12	22.0228.0.000	Collar			1
13	08.6400.5.305	Set Screw M5 x 0,5 - 5			4
14	24.0049.0.000	Set Collar			2
15	08.6000.5.020	Screw M5 x 20			2
16	07.6045.0.037	Grooved Pin 3 x 16			2
17	22.0313.0.000	Feed Brake Pad	●●●		(1)
18	07.6440.0.050	Spring			1
19	07.6045.0.009	Pin 3 x 12			2
20	22.0309.0.000	Feed Brake			(1)
21	22.0184.0.000	Screw M5 x 8			3
22	22.0315.0.000	Feed Shaft Bracket	●●		1
23	07.6440.0.028	Spring			2
24	08.6733.3.000	Lock Nut M3			2
25	17.0019.2.057	Lockwasher			1
26	22.0208.0.000	Flat Washer			1
27	22.0186.0.000	Washer Dia. 5.2/17-0.2			1
28	08.6400.4.005	Set Screw M4 x 5			6
29	24.2035.0.000	Gear Cover			1
30	07.6045.0.034	E-Ring			1
31	22.0049.0.000	Feed Brake Mounting Block	●		1
32	08.6000.4.025	Screw M4 x 25			2
33	08.6400.5.005	Set Screw M5 x 5			1
34	22.0100.0.000	Shoulder Washer			4
35	22.0305.0.000	Feed Connecting Link	●	●●	1
36	22.0320.0.000	Feed Shaft Bearing Housing			1
37	17.0019.0.517	Washer			1
38	08.6000.3.010	Screw M3 x 10			1
39	22.0183.0.000	Collar Dia. 8			1
40	22.0026.0.000	L.H. Feed Cam Follower	●	●●	1
41	07.6440.0.018	Spring			2
42	24.0127.0.000	R.H. Feed Cam Follower	●	●●	1
43	08.6800.4.000	Lockwasher M4			2
44	22.0336.0.000	Feed Shaft			1
45	08.6000.4.014	Screw M4 x 14			2
46	22.0370.0.000	Feed Crank			1

FEED MECHANISM

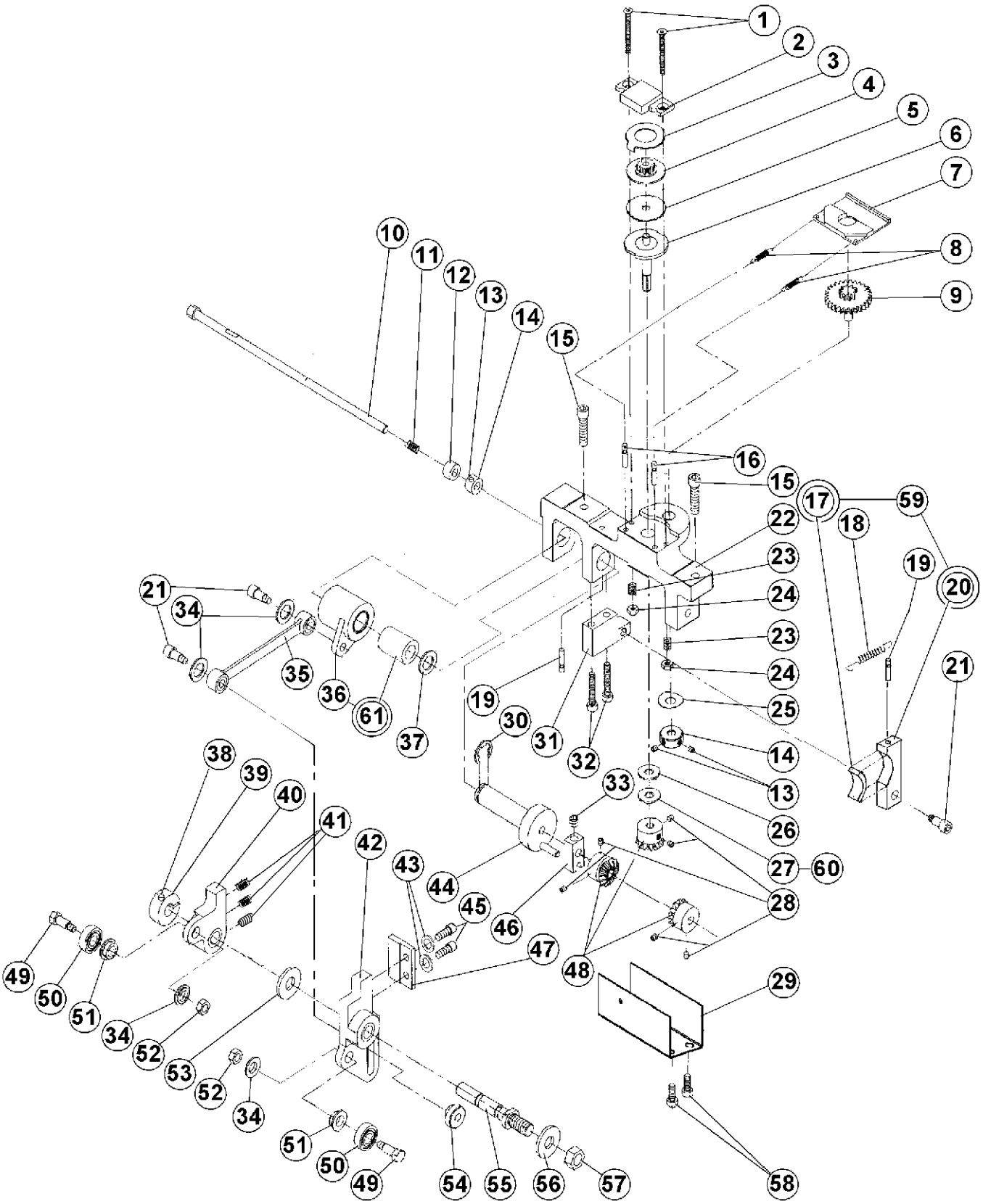

FEED MECHANISM

DET	PART NUMBER	DESCRIPTION	QTY.
47	22.0021.0.000	Spring Retain Block	1
48	22.0353.0.000	Steel Bevel Gear ●	3
49	22.0032.0.000	Bearing Shoulder Screw	2
50	07.6321.0.025	Bearing	2
51	22.0031.0.000	Bearing Spacer	2
52	08.6710.5.000	Nut M5	2
53	22.0232.0.000	Washer	1
54	22.0110.0.000	Shoulder Nut M5	1
55	22.0022.0.000	Pivot Shaft	1
56	08.6850.8.000	Flat Washer M8	1
57	08.6700.8.000	Nut M8	1
58	08.6000.4.005	Screw M4 x 5	2
59	22.0309.0.050	Feed Brake Assembly	1
60	24.0140.0.000	Washer Dia. 5.2/17-0.1	1
61	07.6321.0.030	Bearing	(1)

LOOPER MECHANISM

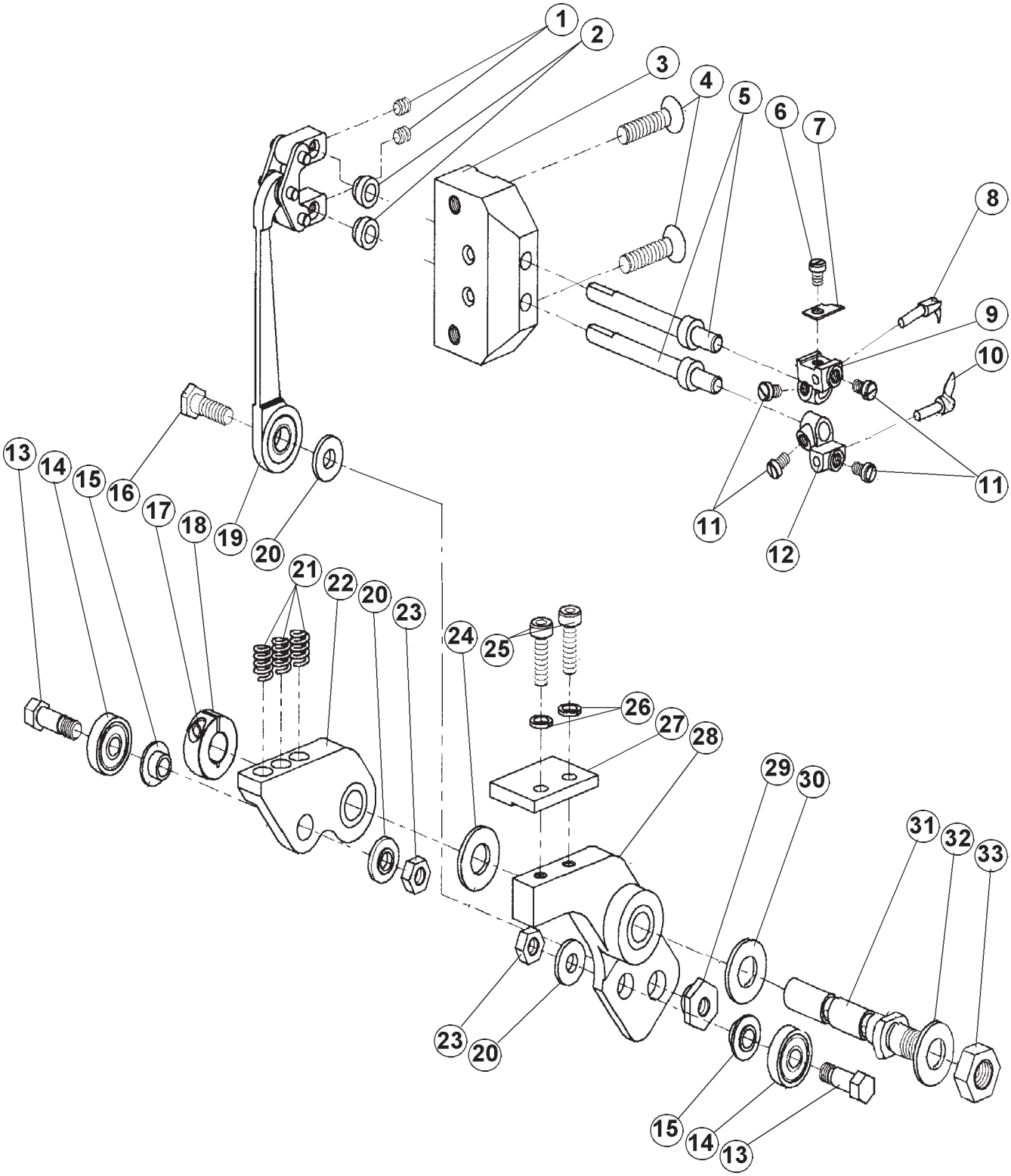

Revised: 06/2023
E-mail: info@amfreece-cars.cz

LOOPER MECHANISM

DET	PART NUMBER	DESCRIPTION	QTY.
01	08.6400.4.004	Set Screw M4 x 4	2
02	22.2442.0.000	Looper Spacer	2
03	22.2410.0.000	Looper Shaft Block	1
04	08.6100.5.020	Screw M5 x 20	2
05	22.2440.0.000	Looper Shaft	2
06	01.1382.0.000	Screw	1
07	20.0094.0.000	Trimmer Knife	1
08	20.0111.0.000	First Looper	1
09	23.2106.0.000	First Looper Holder	1
10	20.0112.0.000	Second Looper	1
11	01.1397.0.000	Screw	4
12	23.2107.0.000	Second Looper Holder	1
13	24.0066.0.000	Bearing Screw	2
14	12.2010.1.002	Cam Follower Bearing	2
15	22.0031.0.000	Bearing Spacer	2
16	22.0064.0.000	Bite Shoulder Screw	1
17	08.6000.3.010	Screw M3 x 10	1
18	22.0183.0.000	Collar	1
19	22.2425.0.050	Looper Link Assembly	1
20	22.0100.0.000	Shoulder Washer	3
21	07.6440.0.036	Spring	3
22	22.0024.0.000	Looper Cam Follower Plate ● ●●	1
23	08.6710.5.000	Hex Nut M5	2
24	22.0232.0.000	Flat Washer	1
25	08.6000.4.014	Screw M4 x 14	2
26	08.6800.4.000	Lockwasher M4	2
27	22.0021.0.000	Spring Retainer Block	1
28	22.0023.0.000	R.H. Looper Cam Follower Plate ● ●●	1
29	22.0105.0.000	Looper Eccentric Nut	1
30	22.0233.0.000	Flat Washer	1
31	22.0022.0.000	Pivot Shaft	1
32	08.6850.8.000	Flat Washer M8	1
33	08.6700.8.000	Hex Nut M8	1

BASE

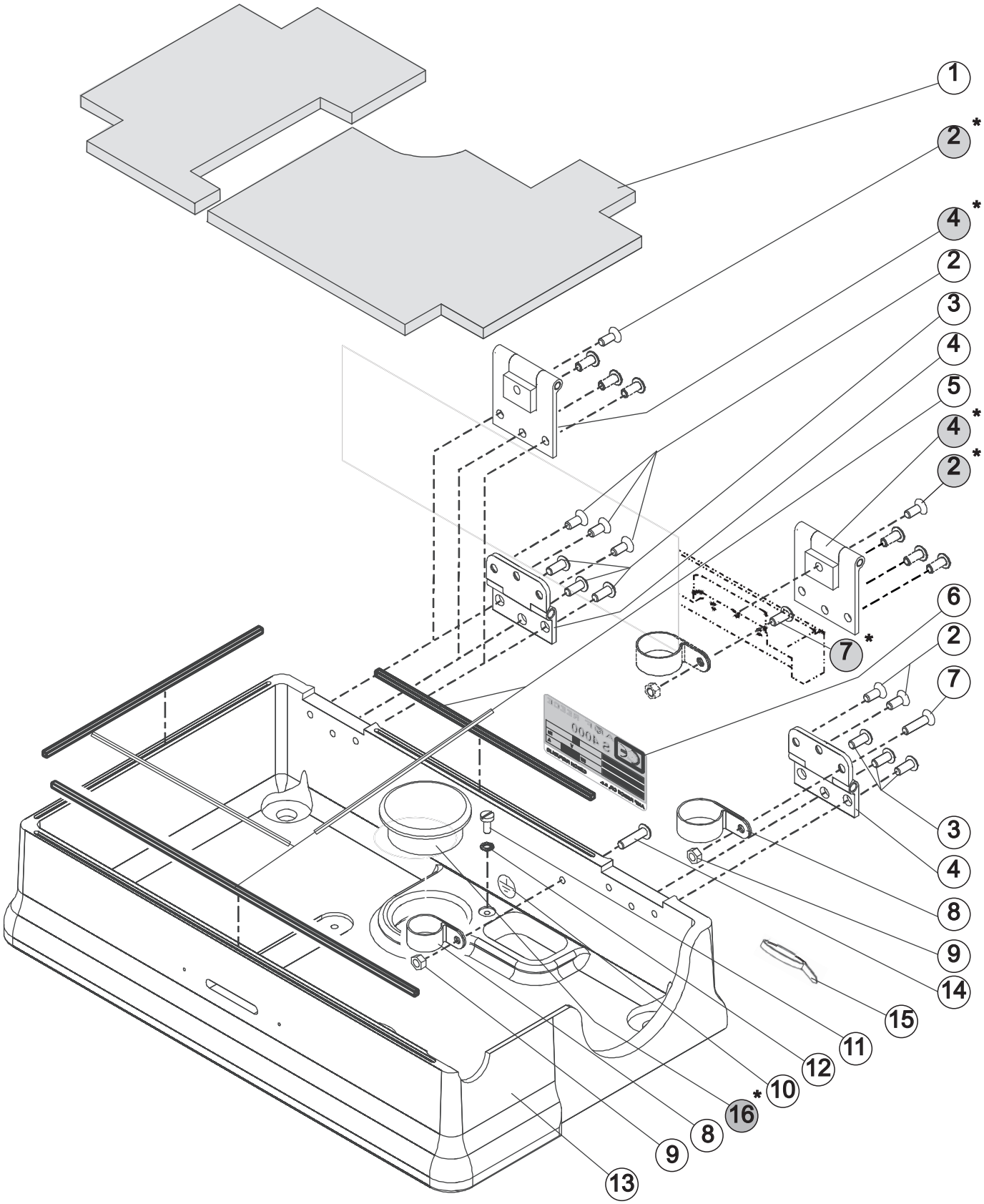

* — S4000 ISBH Embedded Machine

Revised: 06/2023
E-mail: info@amfreece-cars.cz

BASE

DET	PART NUMBER	DESCRIPTION		QTY.
01	24.0111.0.000	Base Sound Deadener	●●●	1
02	08.6100.5.012	Screw M5 x 12		5
02*	08.6100.5.012	Screw M5 x 12		2*
03	08.6200.5.012	Screw M5 x 12		6
04	22.1010.0.000	Base Hinge		2
04*	24.0155.0.000	Base Hinge		2*
05	24.0038.0.000	Base Gasket	●●●	1
06	12.8000.1.028	CE”” Label		1
07	08.6100.5.020	Screw M5 x 20		1
07*	08.6200.5.014	Screw M5 x 14		1*
08	12.0008.4.197	Cord Clamp	●●●	2
09	08.6700.5.000	Nut M5		2
10	12.0008.4.052	Label (Ground)		1
11	08.6012.4.010	Screw M4 x 10		1
12	08.6832.4.000	Serrated Lockwasher M4		1
13	24.6005.1.002	Base		1
14	08.6200.5.020	Screw		1
15	12.0008.3.023	Ty - Wrap		1
16*	12.0008.4.632	Plug		1*

* Modification — S4000 ISBH (Embedded)

BITE MECHANISM

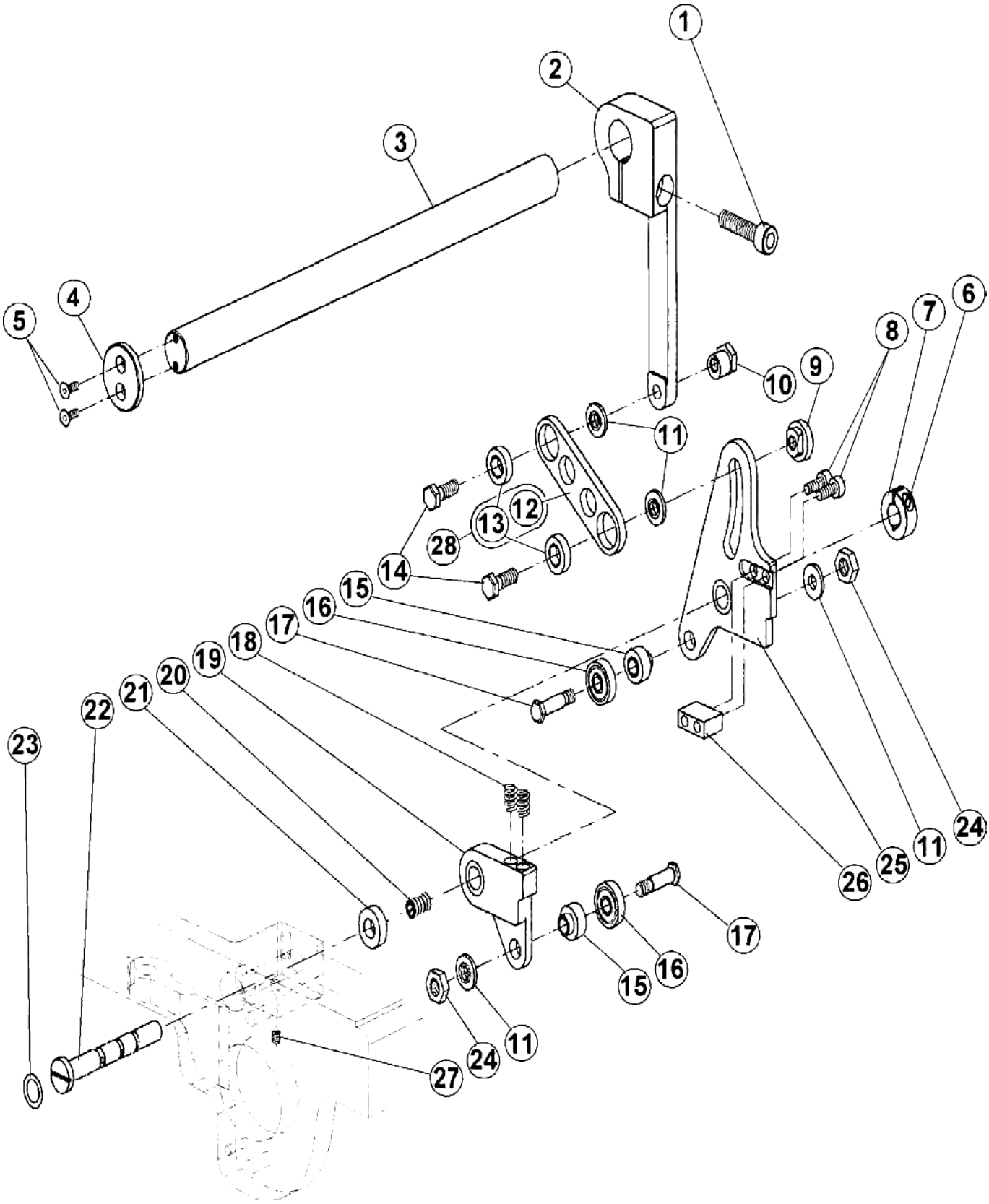

BITE MECHANISM

DET	PART NUMBER	DESCRIPTION		QTY.
01	08.6000.6.025	Screw M6 x 25		1
02	22.0008.0.000	Bite Lever	●	1
03	24.0055.0.000	Bite Shaft		1
04	22.0063.0.000	Bite Shaft Retainer		1
05	08.6100.3.008	Screw M3 x 8		2
06	08.6000.3.010	Screw M3 x 10		1
07	22.0183.0.000	Collar*Dia. 8		1
08	08.6000.4.014	Screw M4 x 14		2
09	22.0110.0.000	Shoulder Nut M5		1
10	22.0214.0.000	Eccentric Nut M5		1
11	22.0100.0.000	Shoulder Washer		4
12	22.0009.0.000	Bite Adjusting Link	●	(1)
13	07.6321.0.029	Bearing		(2)
14	22.0064.0.000	Bite Shoulder Screw		2
15	22.0029.0.000	Bite Follower Bearing Spacer		2
16	07.6321.0.025	Bearing		2
17	22.0028.0.000	Bite Follower Bearing Screw		2
18	07.6440.0.028	Spring		2
19	22.0027.0.000	Right Cam Follower	● ●●	1
20	08.6400.4.005	Set Screw M4 x 5		1
21	22.0069.0.000	Bite Follower Spacer		1
22	22.0020.0.000	Bite Pivot Shaft		1
23	12.0008.6.800	Rubber Ring	●●●	1
24	08.6700.5.000	Hex Nut M5		2
25	24.0033.0.000	Left Cam Follower	● ●●	1
26	22.0030.0.000	Bite Follower Spring Retainer		1
27	08.6400.4.004	Screw M4x4		1
28	22.0009.0.050	Bite Adjusting Link Assembly		1

THREAD DRAW-OFF MECHANISM

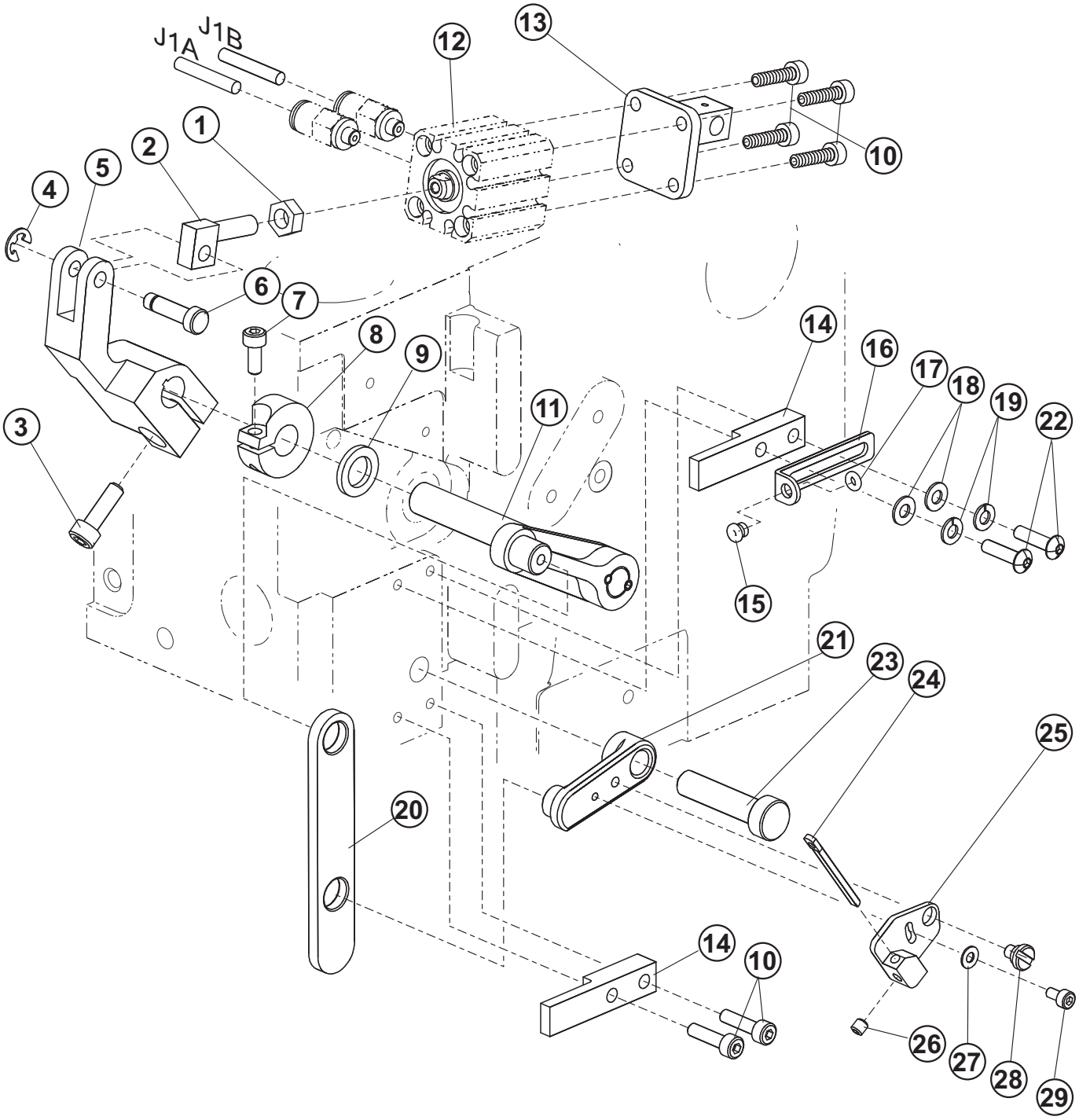

Revised: 06/2023
E-mail: info@amfreece-cars.cz

THREAD DRAW-OFF MECHANISM

DET	PART NUMBER	DESCRIPTION		QTY.
01	08.6710.6.000	Nut M6	●●●	1
02	24.0037.0.000	Cylinder Clevis	●●●	1
03	08.6000.5.016	Screw M5 x 16		1
04	07.6045.0.042	E-Clip		1
05	24.0011.0.000	Knife Drive Lever		1
06	24.0014.0.000	Pivot		1
07	08.6000.4.010	Screw M4 x 10		1
08	24.0010.0.000	Clamp Collar		1
09	24.0009.0.000	Washer		1
10	08.6000.4.016	Screw M4 x 16		6
11	22.1415.0.050	Knife Lever Assembly		1
12	See Page 3-53	Thread Draw-Off Cylinder		—
13	24.0039.1.000	Thread Draw-Off Bracket		1
14	22.1436.0.000	Drive Plate Retainer	● ●●●	2
15	01.7447.1.000	Porcelain Guide		1
16	22.0046.0.000	Thread Guide Bracket		1
17	01.6551.0.000	Retaining Ring		1
18	08.6850.4.000	Flat Washer M4		2
19	08.6800.4.000	Lockwasher M4		2
20	24.1430.1.000	Drive Plate		1
21	24.0062.0.000	Knife Guide Link		1
22	08.6200.4.016	Screw M4 x 16		2
23	22.0161.0.000	Pivot Eccentric		1
24	22.0091.0.000	Thread Take-Up		1
25	24.0063.0.000	Thread Draw-Off		1
26	08.6400.4.004	Set Screw M4 x 4		1
27	08.6850.3.000	Washer M3		1
28	24.0061.0.000	Shoulder Screw		1
29	08.6000.3.006	Screw M3 x 6		1

MAIN CAM

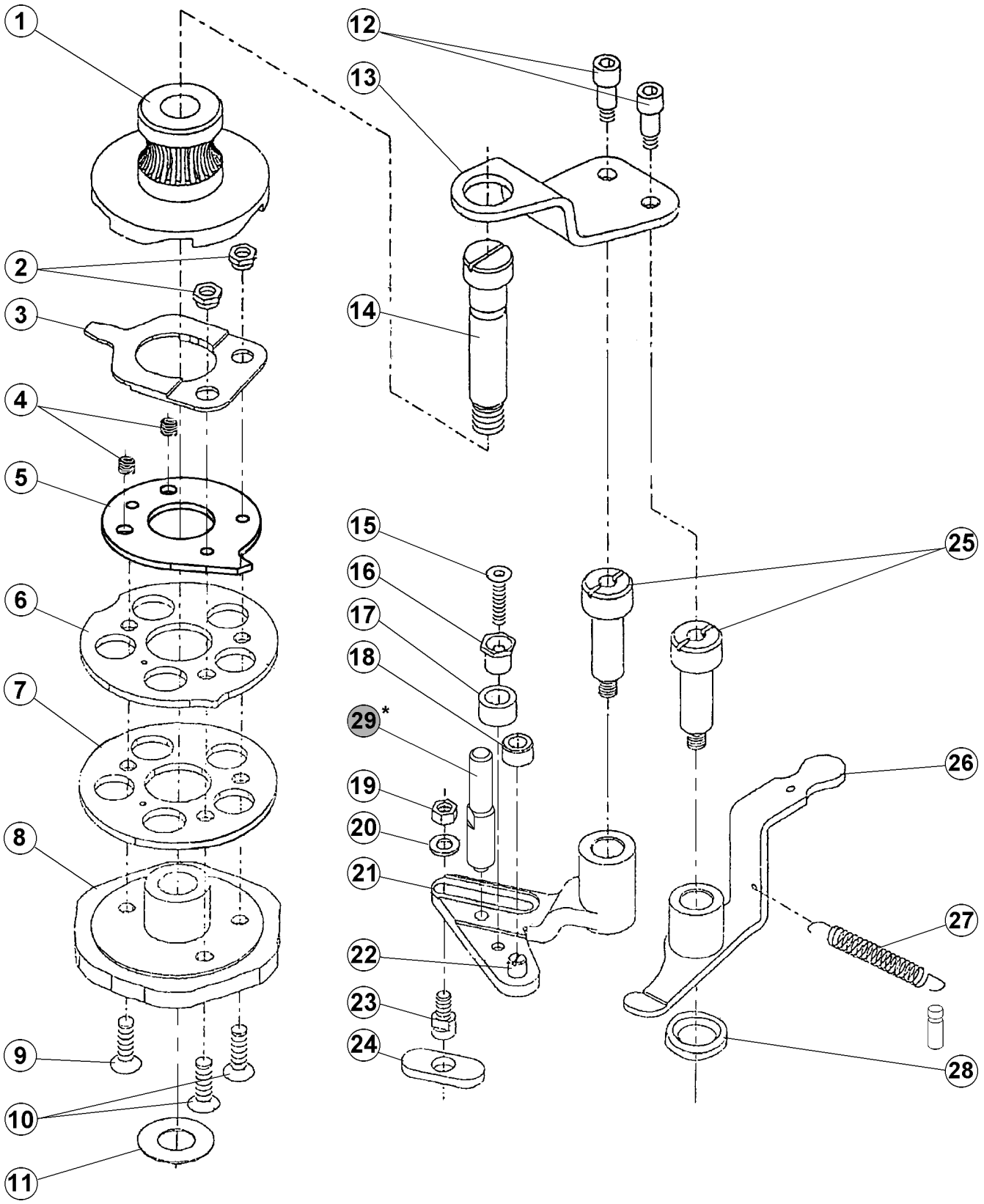

Revised: 06/2023
E-mail: info@amfreece-cars.cz

MAIN CAM

DET	PART NUMBER	DESCRIPTION	QTY.
01	22.2607.0.000	Drive Disk/Worm Gear Hub	1
02	22.2627.0.000	Shoulder Nut	2
03	22.2626.0.000	Drive Disk Switch Spring	1
04	07.6440.0.037	Spring	2
05	24.3076.0.000	Stop Disk	1
06	24.3070.0.000	Feed Reversing Cam	1
07	22.3069.0.000	Washer	1
08	24.3077.0.000	Barring Cam ISBH	1
09	08.6100.5.010	Screw M5 x 10	1
10	22.0137.0.000	Screw M5 x 14	2
11	07.6321.0.001	Thrust Washer	1
12	22.0182.0.000	Screw M5 x 4	2
13	22.0097.0.000	Main Cam Brace	1
14	22.2610.0.000	Main Cam Shoulder Screw	1
15	08.6100.4.012	Screw M4 x 12	1
16	22.2635.0.000	Barring Lever Eccentric	1
17	22.2638.0.000	Barring Lever Roller	1
18	22.2639.0.000	Barring Lever Roller	1
19	08.6700.5.000	Nut M5	1
20	08.6850.5.000	Washer M5	1
21	24.2630.1.000	Barring Lever	1
22	22.2637.0.000	Barring Lever Stud	1
23	22.2633.0.000	Slidestone Retaining Screw	1
24	22.2631.0.000	Clamp Plate Slidestone	1
25	22.0106.0.000	Hub Shoulder Screw	2
26	22.2640.0.050	Feed Reversing Lever	1
27	07.6440.0.045	Extension Spring	1
28	22.3003.0.000	Spacer	1
29*	24.4028.1.000	Stud*	1*

* Modification — Mechanical Indexer

HEAD ASSEMBLY

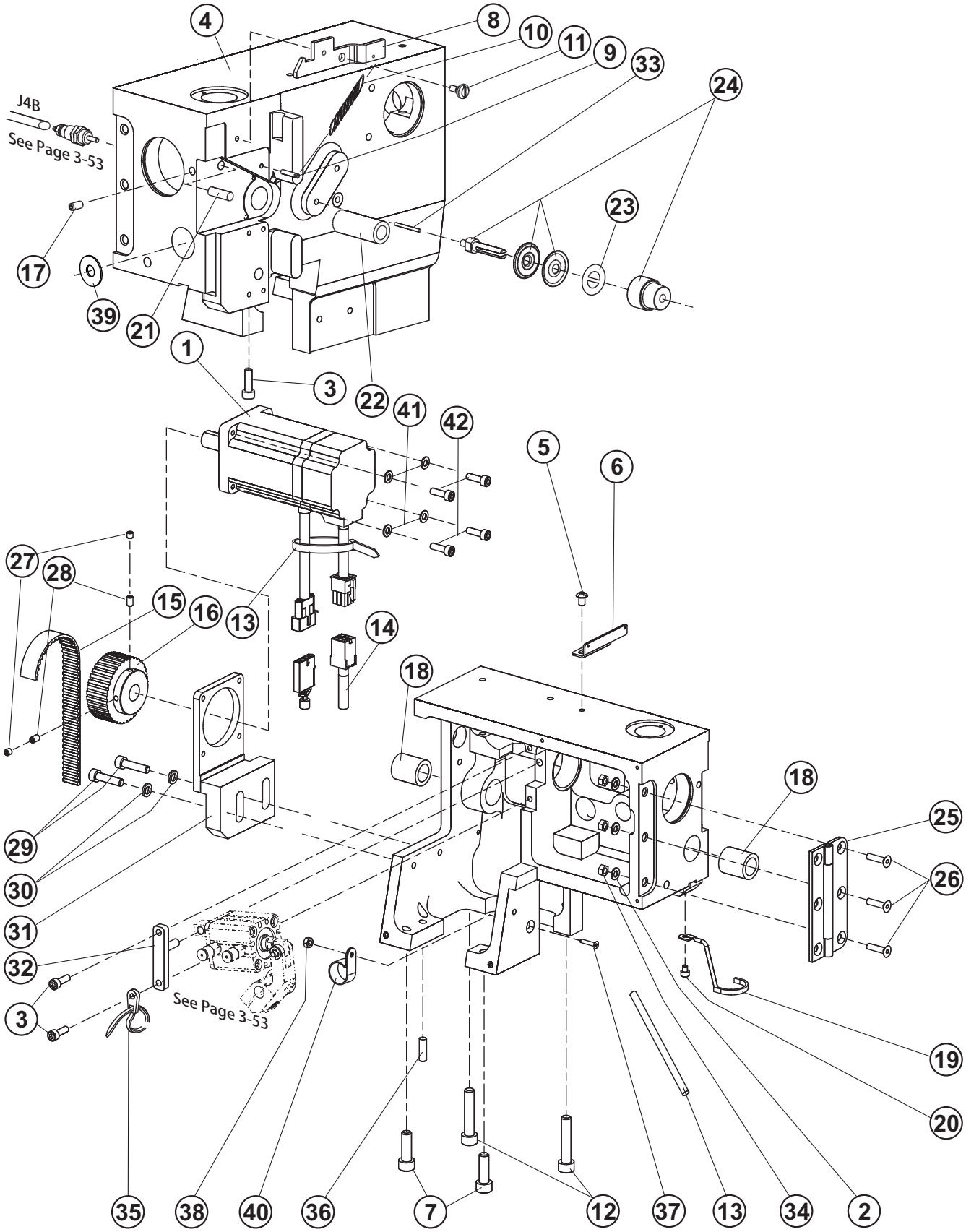

Revised: 06/2023
E-mail: info@amfreece-cars.cz

HEAD ASSEMBLY

DET	PART NUMBER	DESCRIPTION		QTY.
01	See Page 3-37;41; 45	Servomotor		—
02	08.6850.5.000	Washer M5		3
03	08.6000.5.016	Screw M5 x 16		4
04	24.6000.5.000	Head		1
05	08.6200.5.008	Screw M5 x 8		1
06	22.0054.0.000	Upper Thread Guide		1
07	08.6000.8.025	Screw M8 x 25		2
08	22.0058.0.000	Sewing Head Latch		1
09	07.6045.0.037	Grooved Pin 3 x 16		1
10	07.6440.0.051	Latch Tension Spring		1
11	22.0062.0.000	Screw M4 x 3		1
12	08.6000.8.040	Screw M8x40		2
13	12.0008.4.072	Cable Tie	●	10
14	See Page 3-37;41; 45	Encoder Cable		—
15	12.5050.2.009	Belt	●●●	1
16	24.0108.0.000	Motor Pulley	●	1
17	08.6400.5.010	Screw M5 x 10		1
18	01.7806.0.000	Oilite Bushing	●●	2
19	24.0044.0.000	Needle Guard		1
20	08.6000.4.005	Screw M4 x 5		1
21	07.6045.0.053	Pin 6 x 20		1
22	22.1422.0.000	Knife Shaft Bushing		1
23	17.0082.8.082	Release Washer		1
24	24.0119.0.050	Large Tension Assembly	●●●	1
25	22.6002.0.000	Head Hinge Assembly		1
26	08.6100.5.020	Screw M5 x 20		3
27	08.6400.5.005	Set Screw M5 x 5		2
28	08.6400.5.008	Set Screw M5 x 8		2
29	08.6000.6.025	Screw M6 x 25		2
30	08.6850.6.000	Washer M6		2
31	24.0106.1.000	Motor Bracket		1
32	24.0016.0.000	Cylinder Pivot Stud Assembly		1
33	12.1010.2.003	Pin 2 x 24		1
34	08.6700.5.000	M5 Nut		3
35	12.0008.4.598	Plastic Cable Fitting	●●●	1
36	12.1011.0.001	Pin 6 x 20		1
37	08.6100.5.020	Screw M5 x 20		1
38	08.6700.5.000	Nut M5		1
39	24.0546.0.000	Washer		1
40	12.0008.4.100	Clamp pPlastic		1
41	08.6850.4.000	Washer M4		4
42	08.6000.4.016	Screw M4x16		4

BEDPLATE

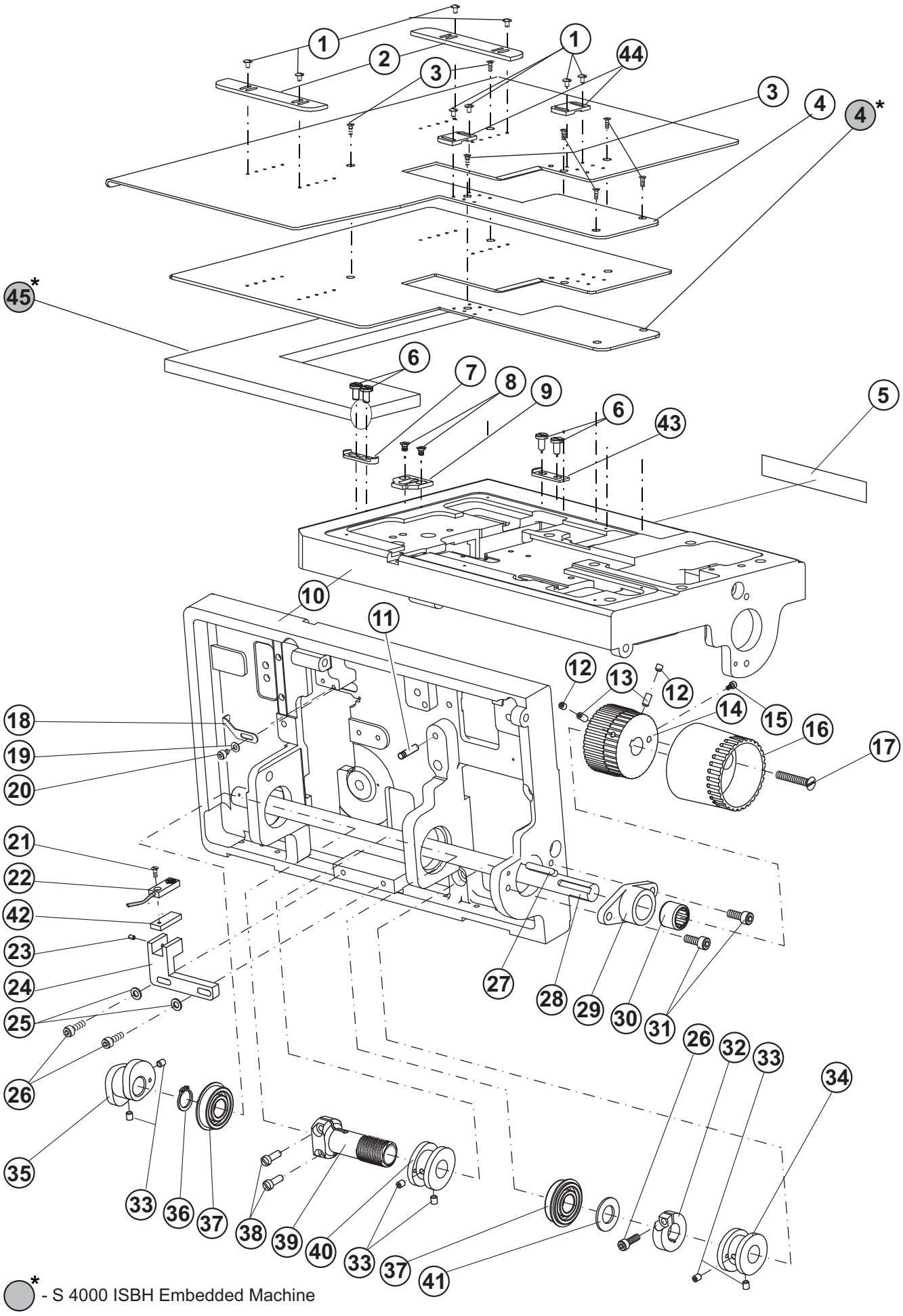

* - S 4000 ISBH Embedded Machine

Revised: 06/2023
E-mail: info@amfreece-cars.cz

BEDPLATE

DET	PART NUMBER	DESCRIPTION		QTY.
01	22.3068.0.000	Screw (Only ISBH model)		8
02	24.3054.0.000	Material Guide		2
03	08.6120.3.008	Screw M3 x 8		7
04	24.3055.0.000	Cover Plate		1
04*	24.3081.0.000	Cover Plate Embedded		1*
05	05.1394.0.000	AMF Reece Label - small		1
06	22.0143.0.000	Screw		4
07	22.3022.0.000	Front Stop		1
08	08.6100.4.006	Screw M4 x 6		2
09	22.0408.1.000	Trimmer Cover Plate		1
10	24.6100.1.000	Bedplate ISBH		1
11	07.6045.0.054	Pin 5 x 20		1
12	08.6400.5.005	Set Screw M5 x 5		2
13	08.6400.5.010	M5 x 10 Set Screw		2
14	24.0018.0.000	Main Shaft Drive Pulley	●	1
15	08.6000.3.006	Screw M3 x 6		1
16	24.0051.0.066	Hand Wheel	●	1
17	08.6100.6.035	Screw M6 x 35		1
18	24.0196.0.000	Needle Guard		1
19	08.6850.4.000	Washer M4		1
20	08.6000.4.006	Screw M4 x 6		1
21	08.6100.3.008	Screw M3 x 8		1
22	See Page 3-37;41	End of Cycle Sensor with Cable	●●●	—
23	08.6400.3.004	Set Screw M3 x 4		1
24	24.0020.0.000	End of Cycle Sensor Bracket		1
25	08.6850.5.000	Washer M5		2
26	08.6000.5.016	Screw M5 x 16		3
27	12.4030.0.002	Key 5x5x30		1
28	24.1000.0.000	Main Shaft		1
29	24.0019.0.000	Bearing Carrier Lower Shaft		1
30	12.2050.0.005	Bearing		1
31	08.6000.6.016	Screw M6 x 16		2
32	24.0002.0.000	Clamp Collar		1
33	08.6400.5.305	Set Screw M5 x 0.5-5		6
34	22.0006.0.000	Bite Cam		1
35	24.2400.0.000	Looper Cam		1
36	12.1045.2.001	Retaining Ring		1
37	01.7805.0.000	Shaft Bearing		2
38	22.0153.0.000	Screw		2
39	22.8400.0.000	Shaft Worm Gear		1
40	22.0300.0.000	Feed Cam		1
41	22.0545.0.000	Washer		1
42	24.0027.0.000	Sensor Mounting Plate		1
43	22.0115.0.000	Stop		1
44	22.3064.0.000	Pawl II (Only ISBH model)		2
45*	24.3085.0.000	Cover Sound Deadener		1*

* Modification — S4000 ISBH Embedded Machine

COVERS

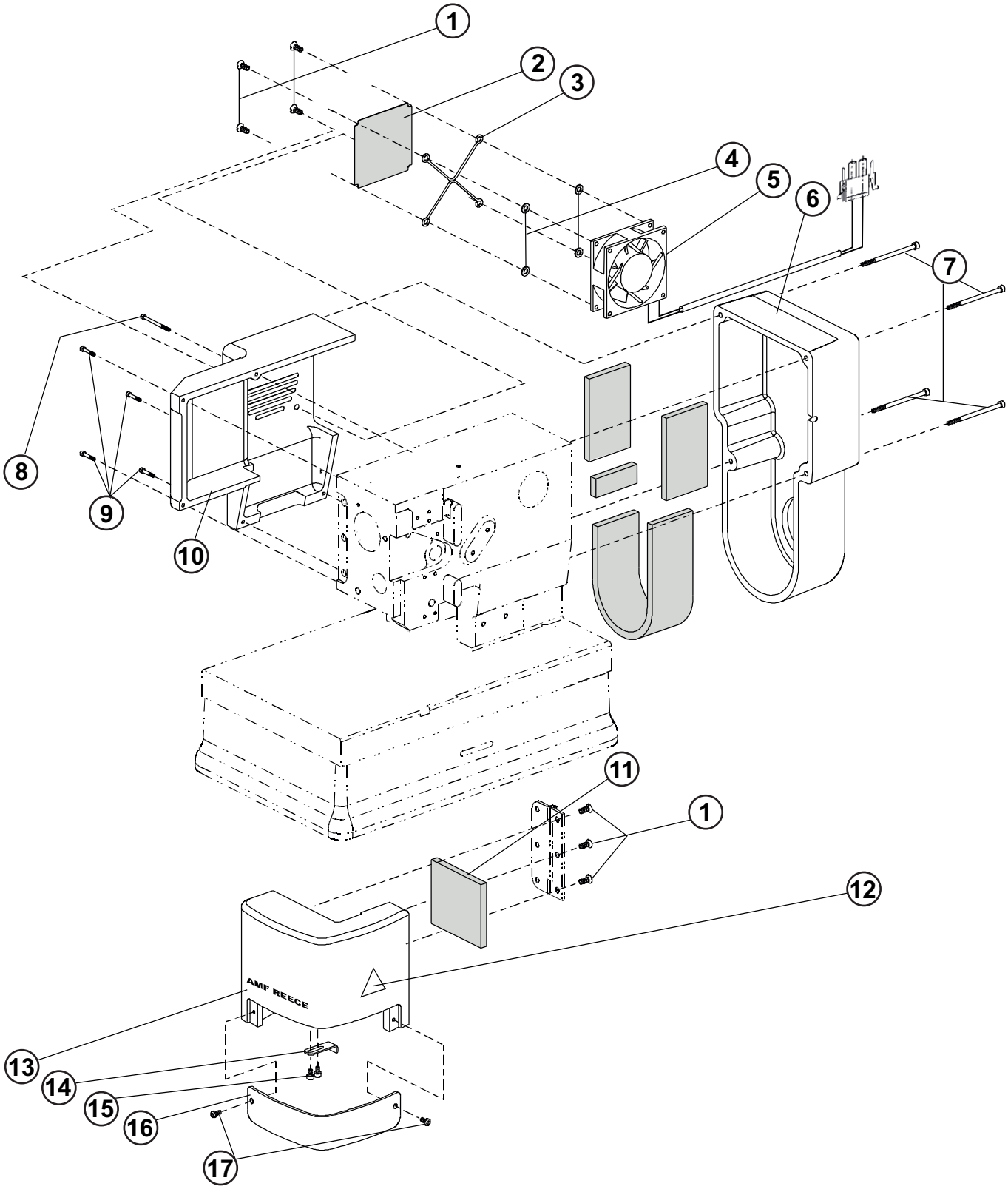

COVERS

DET	PART NUMBER	DESCRIPTION		QTY.
01	08.6100.5.016	Screw M5 x 16		7
02	24.0068.0.000	Net	●●●	1
03	24.0067.0.000	Fan Rack		1
04	08.6850.5.000	Washer M5		4
05	See Page Electrical	Fan Assembly		
06	24.6004.7.000	Pulley Cover	●	1
07	08.6000.4.070	Screw M4 x 70		4
08	08.6000.3.040	Screw M3 x 40		1
09	08.6000.3.016	Screw M3 x 16		4
10	24.6001.7.000	Head Rear Cover	●	1
11	24.0112.0.000	Cover Sound Deadener	●●●	1
12	—	Label		1
13	24.6003.0.000	Needle Bar Cover	●	1
14	22.0057.0.000	Cover Latch		1
15	08.6000.4.006	Screw M4 x 6		2
16	24.0154.0.000	Eye Shield	●●●	1
17	08.6200.4.008	Screw M4 x 8		2

LUBRICATION

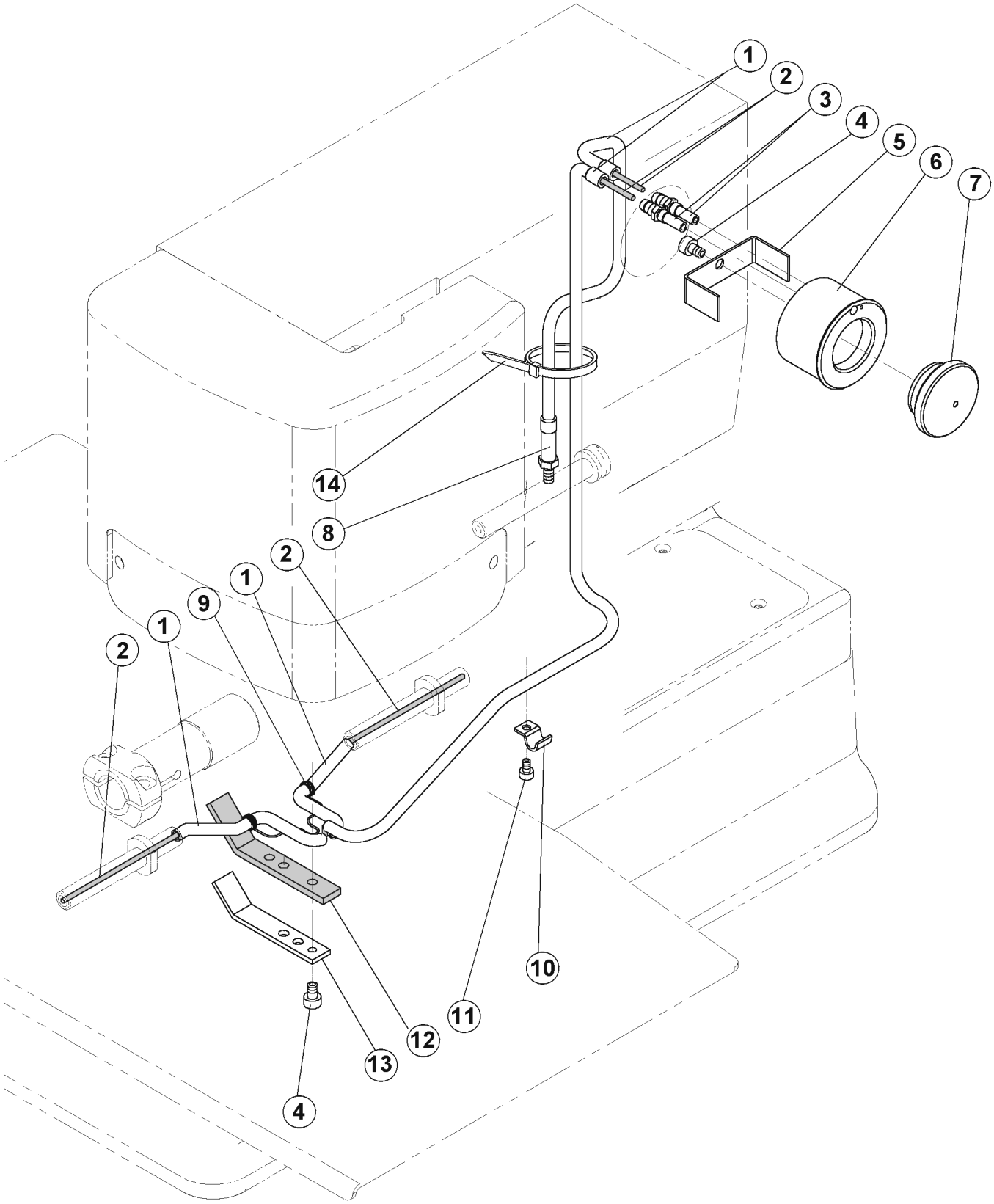

LUBRICATION

DET	PART NUMBER	DESCRIPTION		QTY.
01	24.0141.0.000	Tubing	●●●	1
02	24.0139.0.000	Lubricating Wick	●●●	1
03	22.0229.0.000	Straight Fitting		2
04	08.6000.4.006	Screw M4 x 6		2
05	22.0120.0.000	Holder		1
06	22.0104.0.000	Oil Gauge Reservoir		1
07	17.0095.1.329	Wheel	●●●	1
08	22.0108.0.000	Wick Holder		1
09	17.0027.1.799	Spring		1
10	17.0082.6.000	Clamp		1
11	08.6000.3.006	Screw M3 x 6		1
12	17.0094.5.310	Felt	●●●	1
13	22.0107.0.000	Worm Gear Felt Retainer		1
14	12.0008.3.023	Ty-wrap	●●●	1

TABLE

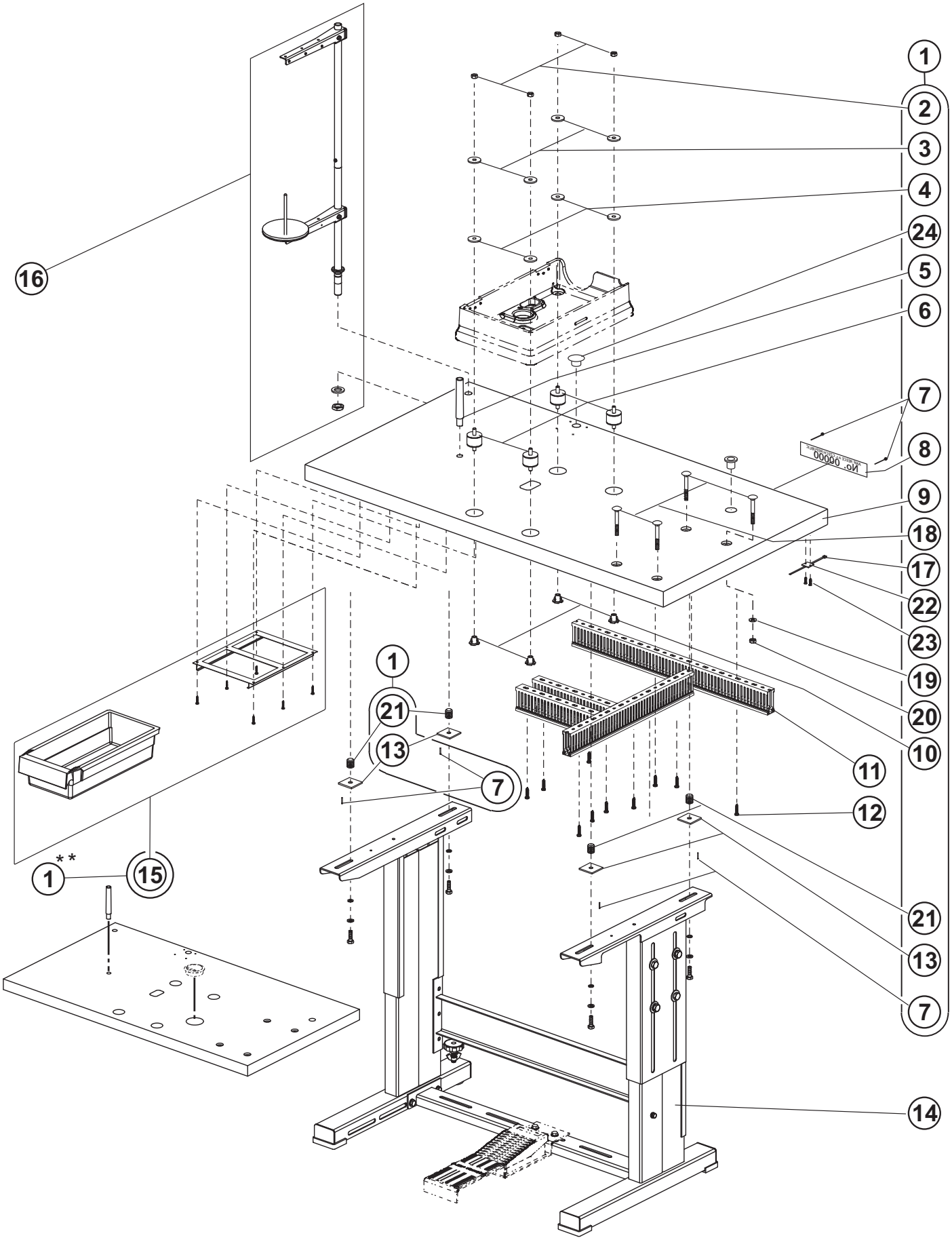

Revised: 06/2023
E-mail: info@amfreece-cars.cz

TABLE

DET	PART NUMBER	DESCRIPTION		QTY.
01	24.0142.0.050	Table Assembly ISBH		1
02	08.6700.8.000	M8 Nut		(4)
03	17.0019.0.441	Washer		(4)
04	17.0095.1.272	Washer	●●●	(4)
05	12.0008.6.900	Machine Rest Table Pin		(1)
06	12.0008.6.801	Rubber Spring	●●●	(4)
07	12.1016.1.000	Nail	●●●	(6)
08	04.1416.0.003	Label “No. xxxx”		(1)
09	24.0142.0.000	Table	●●●	(1)
10	08.6742.8.000	M8 Nut		(4)
11	24.0069.9.063	Wire Raceway Kit	●●●	1
12	08.6663.5.025	Screw 4,8 - 25		10
13	17.0094.0.200	Washer	●●●	(4)
14	04.9000.2.123	Frame Kit		1
15	12.0008.6.901	Drawer Kit	●●●	(1)
16	22.0219.0.000	Thread Stand		1
17	12.0008.3.023	Ty-wrap	●●●	(1)
18	08.6532.8.050	Screw M8x50		(4)
19	08.6852.8.000	Washer		(4)
20	08.6702.8.000	Nut		(4)
21	08.6752.8.000	Nut		(4)
22	12.0008.4.058	Clip		(1)
23	08.6652.3.016	Screw 3 x 16		(2)
24	12.0008.4.777	Plug		1**

TABLE EMBEDDED - ISBH

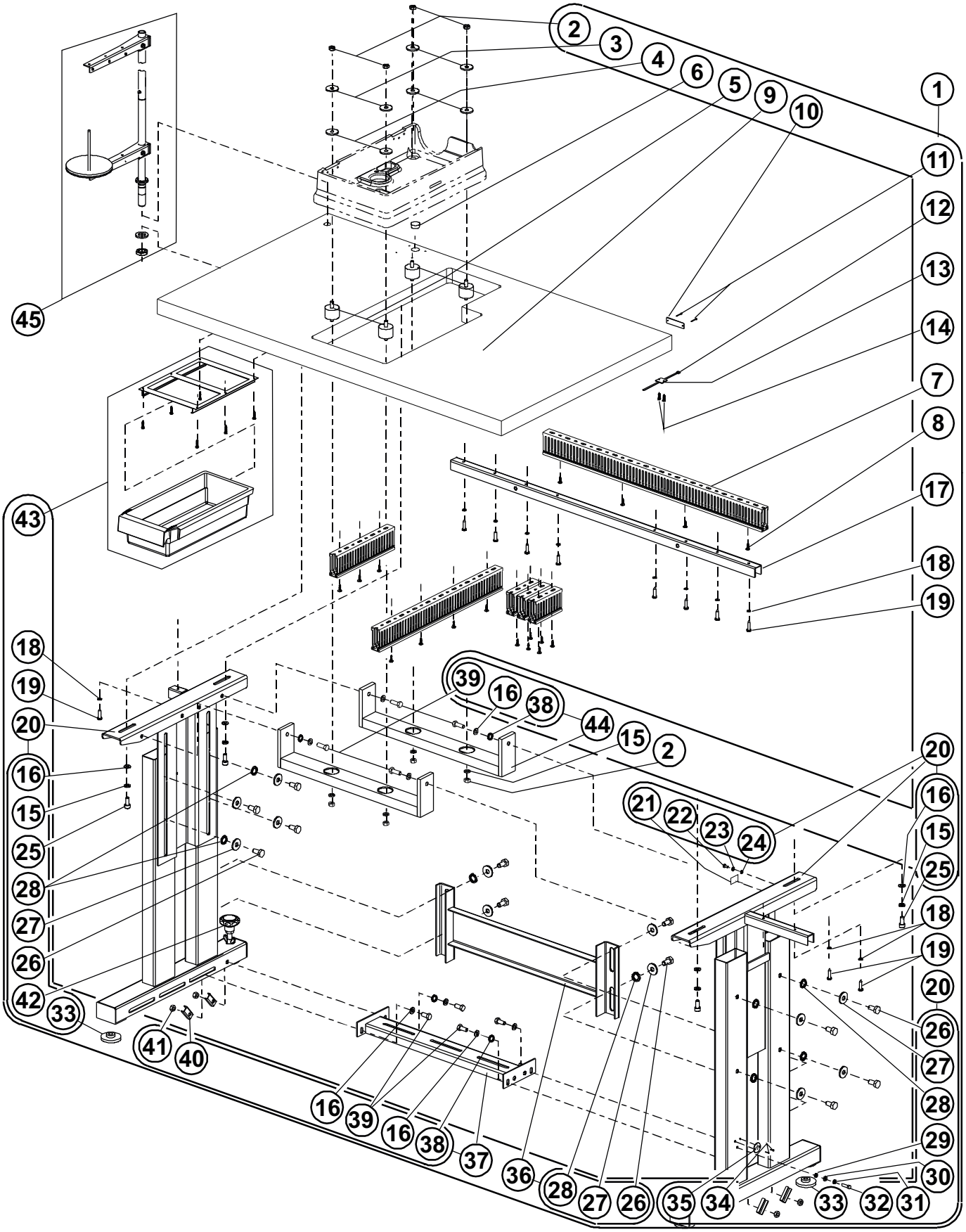

Revised: 06/2023
E-mail: info@amfreece-cars.cz

TABLE EMBEDDED - ISBH

DET	PART NUMBER	DESCRIPTION		QTY.
01	04.9024.0.001	Frame Assembly		1
02	08.6700.8.000	Nut M8		(8)
03	17.0019.0.441	Washer		(4)
04	17.0095.1.272	Rubber Washer	●●●	(4)
05	12.0008.6.801	Rubber Spring		(4)
06	12.0008.4.777	Plug		(1)
07	24.0069.9.040	Latch For Kit	●●●	(1)
08	08.6676.3.020	Screw 3,5 x 20		(17)
09	04.9024.0.900	Table	●●●	(1)
10	04.1416.0.003	Label “No. xxxx”		(1)
11	12.1016.1.000	Nail		(2)
12	12.0008.3.023	Ty-wrap	●●●	(1)
13	12.0008.4.058	Clip		(1)
14	08.6652.3.016	Screw 3 x 16		(2)
15	08.6802.8.000	Spring Washer		(4)+((4))
16	08.6852.8.000	Washer		(4)+(4)+((4))
17	04.9024.0.361	Reinforcement Crossbar		(1)
18	08.6852.5.000	Washer M5		(11)
19	08.6663.5.025	Screw 4,8 x 25		(11)
20	04.9024.0.002	Frame Assembly		(1)
21	12.0008.4.052	Label		((1))
22	08.6012.4.010	Screw M4 x 10		((1))
23	08.6852.4.000	Washer 4,3		((1))
24	08.6832.4.000	Lock Washer M4		((1))
25	08.6312.8.025	Screw M8 x 25		((4))
26	08.6312.0.020	Screw M10 x 20		((12))
27	08.6882.0.000	Washer M10		((12))
28	08.6832.0.000	Washer 10,5		((8+2+2))
29	08.6832.6.000	Lock Washer M6		((1))
30	08.6852.6.000	Washer 6,4		((1))
31	08.6802.6.000	Spring Washer		((1))
32	08.6312.6.020	Screw M6 x 20		((1))
33	12.0008.6.813	Rubber Washer	●●●	((3))
34	12.1016.0.000	Drive Screw		((2))
35	17.0081.6.225	Label		((1))
36	04.9000.0.225	Crossbar Rear		(1)
37	04.9000.0.125	Crossbar Down		(1)
38	08.6832.8.000	Lock Washer M8		((2)+(2))
39	08.6312.8.020	Screw		((4)+(4)+4))
40	12.0008.6.964	Washer - U		((4))
41	08.6702.8.000	Nut M8		(4)
42	12.0008.6.965	Yielding Support		(1)
43	12.0008.6.901	Drawer Kit	●●●	(1)
44	04.9000.0.345	Crossbar Up Assembly		((1))
45	22.0219.0.000	Thread Stand		1

TABLE - ROLLER KIT - EXTRA PARTS

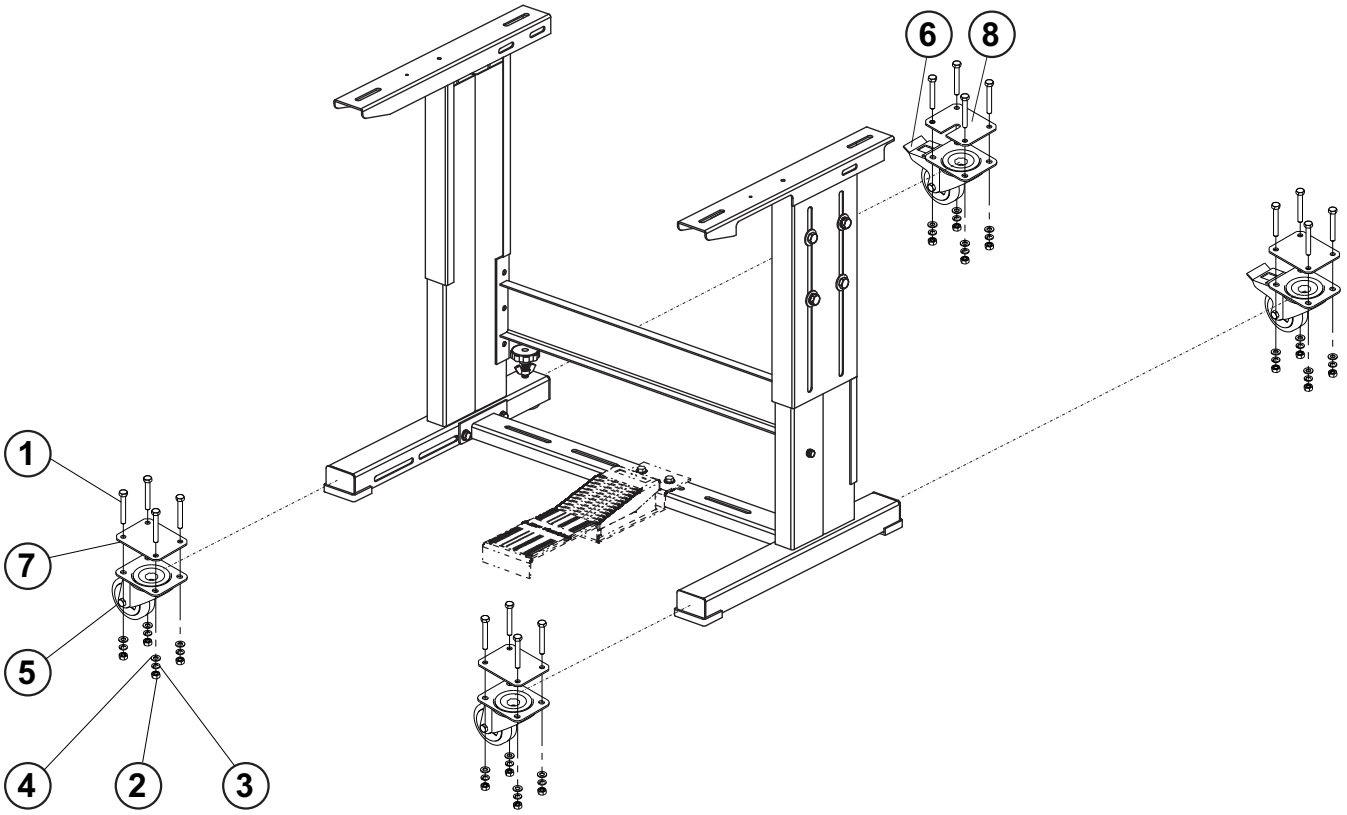

Revised: 06/2023
E-mail: info@amfreece-cars.cz

TABLE - ROLLER KIT - EXTRA PARTS

DET	PART NUMBER	DESCRIPTION	QTY.
01	08.6312.8.060	SCREW M8-60	16
02	08.6702.8.000	NUT M8	16
03	08.6802.8.000	SPRING WASHER M8	16
04	08.6852.8.000	WASHER M8	16
05	12.0008.6.527	ROLLER	2
06	12.0008.6.528	ROLLER WITH BRAKE	2
07	24.0170.0.000	PLATE	3
08	24.0171.0.000	PLATE	1

ELECTRICAL - I

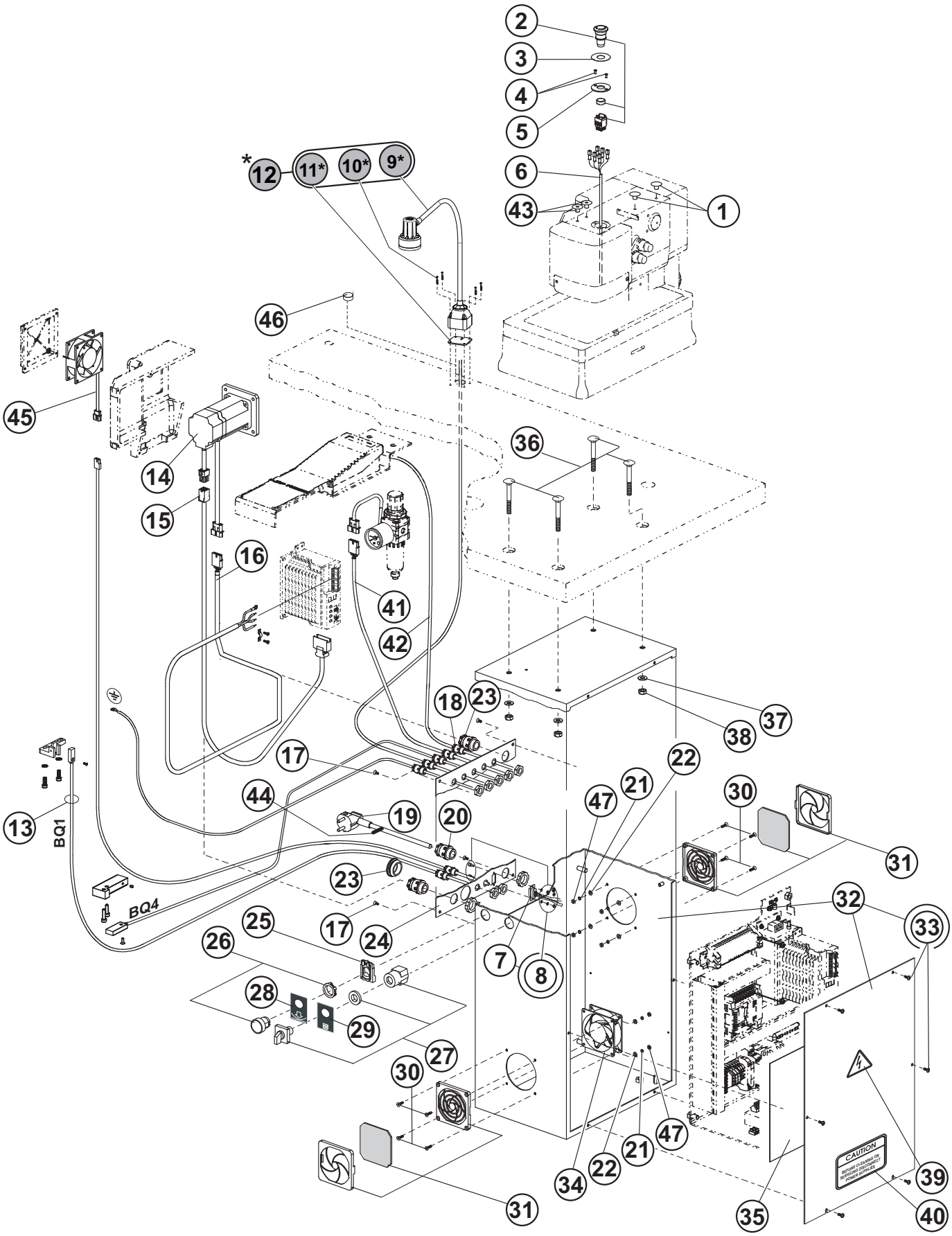

Revised: 06/2023
E-mail: info@amfreece-cars.cz

ELECTRICAL - I

DET	PART NUMBER	DESCRIPTION		QTY.
01	12.0008.4.570	Plug		1
02	12.0010.4.191	Emergency Stop Button		1
03	12.8000.0.047	Label		1
04	08.6102.3.008	Screw		2
05	24.0148.0.000	Emergency Stop Cover		1
06	06.2400.0.012	Emergency Stop/fan cable		1
07	06.2400.0.010	Cable X3		1
08	12.0008.4.710	Screw Kit		1
09*	12.0010.4.390	LAMP		(1)*
10*	08.6962.4.025	VRUT 3,9X25		(1)*
11*	04.9024.0.951	LAMP WASHER		(1)*
12*	06.2400.0.621	LED LAMP KIT		1
13	06.2400.0.009	End of Cycle Sensor BQ1		1
14	12.0010.4.177	Servomotor OMRON		1
15	12.0010.4.178	Encoder Cable		1
16	12.0010.4.179	Motor Power Cable		1
17	08.6100.4.010	Screw		4
18	12.0008.4.207	Bushing	●●●	7
19	12.0008.4.885	Cable Flexo		1
20	12.0008.4.231	Bushing PG 13,5		1
21	08.6802.4.000	Washer		4
22	08.6852.4.000	Washer		4
23	12.0008.4.366	Plug PG 29		2
24	04.9024.0.652	Connectors Plate ISBH		1
25	12.0008.4.863	Switch Unit NO		1
26	12.0008.4.861	Switch (Black)		1
27	12.0008.4.835	Switch ON — OFF		1
28	12.8000.0.041	Label (Clamp Up/Down)		1
29	12.8000.0.040	Label (Main Switch)		1
30	08.6100.4.020	Screw		8
31	12.0008.4.472	Fan Cover With Filter	●●●	2
32	70.4165.1.125	Electrical Box		1
33	08.6032.4.010	Screw M4x10		(6)
34	24.0059.9.017	Fan		1
35	12.8000.0.151	Electrical Diagram Label		1
36	See Page 3-32	Screw M8x55		—
37	See Page 3-32	Washer		—
38	See Page 3-32	Nut		—
39	12.0008.4.378	Label		1
40	00.2751.3.602	Label “CAUTION”		1
41	See Page 3-53	Pressure Gauge		—
42	See Page 3-49	Cable		—
43	08.6215.4.006	Screw		2

* — Extra parts

ELECTRICAL - I

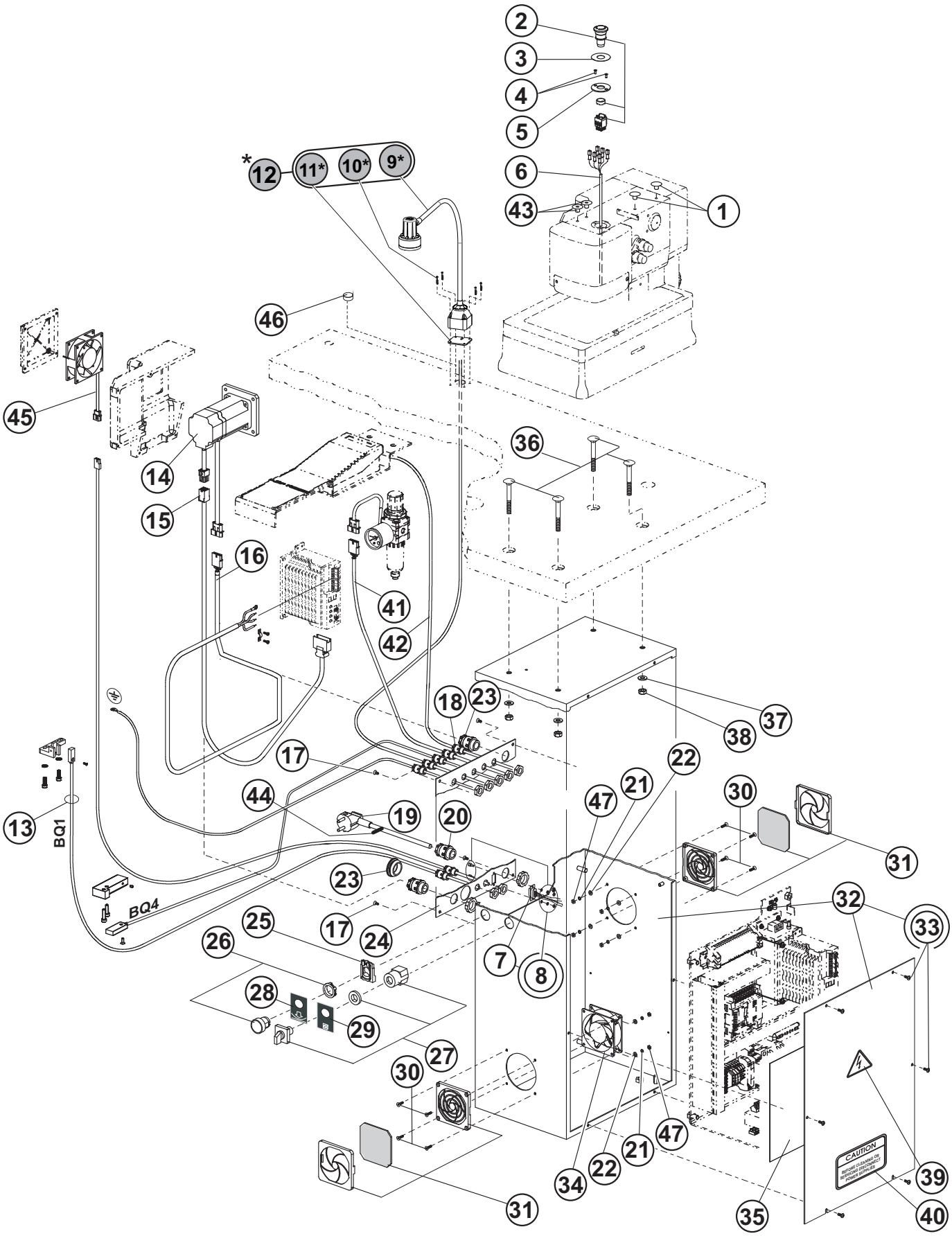

Revised: 06/2023
E-mail: info@amfreece-cars.cz

ELECTRICAL - I

DET	PART NUMBER	DESCRIPTION	QTY.
*	06.2400.0.008	Cable X14	1
44	12.8000.0.112	Label Cable 230V 1PH	1
45	24.0059.9.069	Fan	1
46	12.0008.4.777	Plug	1

* — Extra parts

ELECTRICAL - I TABLE EMBEDDED

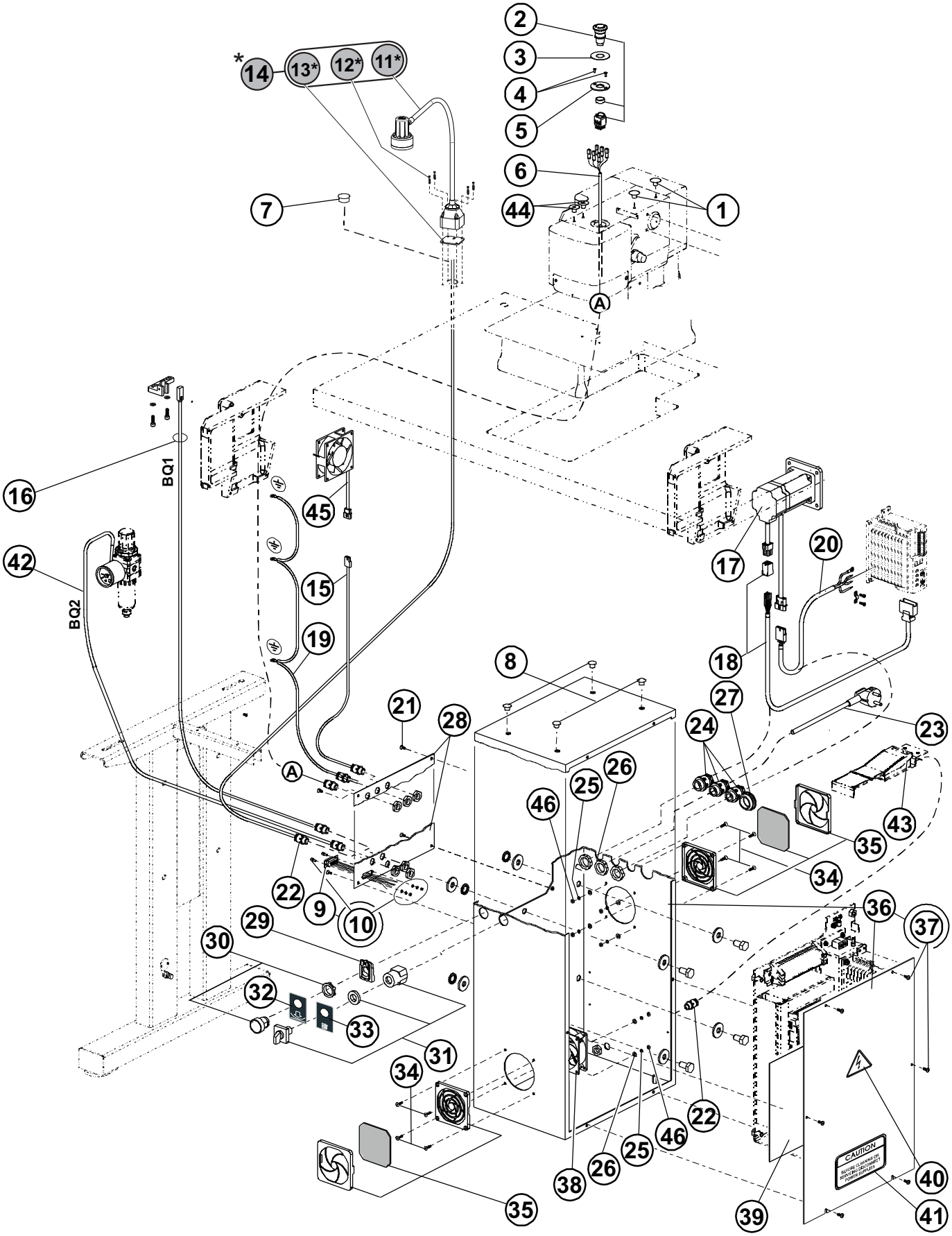

Revised: 06/2023
E-mail: info@amfreece-cars.cz

ELECTRICAL - I TABLE EMBEDDED

DET	PART NUMBER	DESCRIPTION		QTY.
01	12.0008.4.570	Plug		2
02	12.0008.4.563	Emergency Stop Button		1
03	12.8000.0.047	Label		1
04	08.6102.3.008	Screw		2
05	24.0148.0.000	Emergency Stop Cover		1
06	24.0069.9.023	Emergency Stop Cable		1
07	12.0008.4.777	Plug		1
08	12.0008.4.215	Plug		4
09	24.0069.9.004	Cable		1
10	12.0008.4.710	Screw Kit		1
11*	12.0010.4.390	LAMP		(1)*
12*	08.6962.4.025	VRUT 3,9X25		(1)*
13*	04.9024.0.951	LAMP WASHER		(1)*
14*	06.2400.0.621	LED LAMP KIT		1
15	24.0069.9.027	Fan Cable		1
16	24.0069.9.006	End of Cycle Sensor with Cable		1
17	12.0010.4.177	Servomotor OMRON		1
18	12.0010.4.178	Encoder Cable		1
19	—	Cable Ground		1
20	12.0010.4.179	Motor Power Cable		1
21	08.6100.4.010	Screw		4
22	12.0008.4.207	Bushing	●●●	7
23	12.0008.4.713	Cable		1
24	12.0008.4.231	Bushing		3
25	08.6802.4.000	Washer		4
26	08.6852.4.000	Washer		4
27	12.0008.4.366	Plug PG 29		1
28	04.9024.0.650	Connectors Plate ISBH		1
29	12.0008.4.863	Block		1
30	12.0008.4.861	Switch (Black)		1
31	12.0008.4.835	Switch ON — OFF		1
32	12.8000.0.041	Label (Clamp Up/Down)		1
33	12.8000.0.040	Label (Main Switch)		1
34	08.6100.4.014	Screw		1
35	12.0008.4.472	Fan Cover With Filter	●●●	2
36	04.9024.0.500	Electrical Box		1
37	08.6032.4.010	Screw M4x10		(6)
38	24.0059.9.017	Fan		1
39	12.8000.0.151	Electrical Diagram Label		1
40	12.0008.4.155	Label		1
41	00.2751.3.602	Label “CAUTION”		1
42	See Page 3-53	Pressure Gauge		—

* — Extra parts

ELECTRICAL - I TABLE EMBEDDED

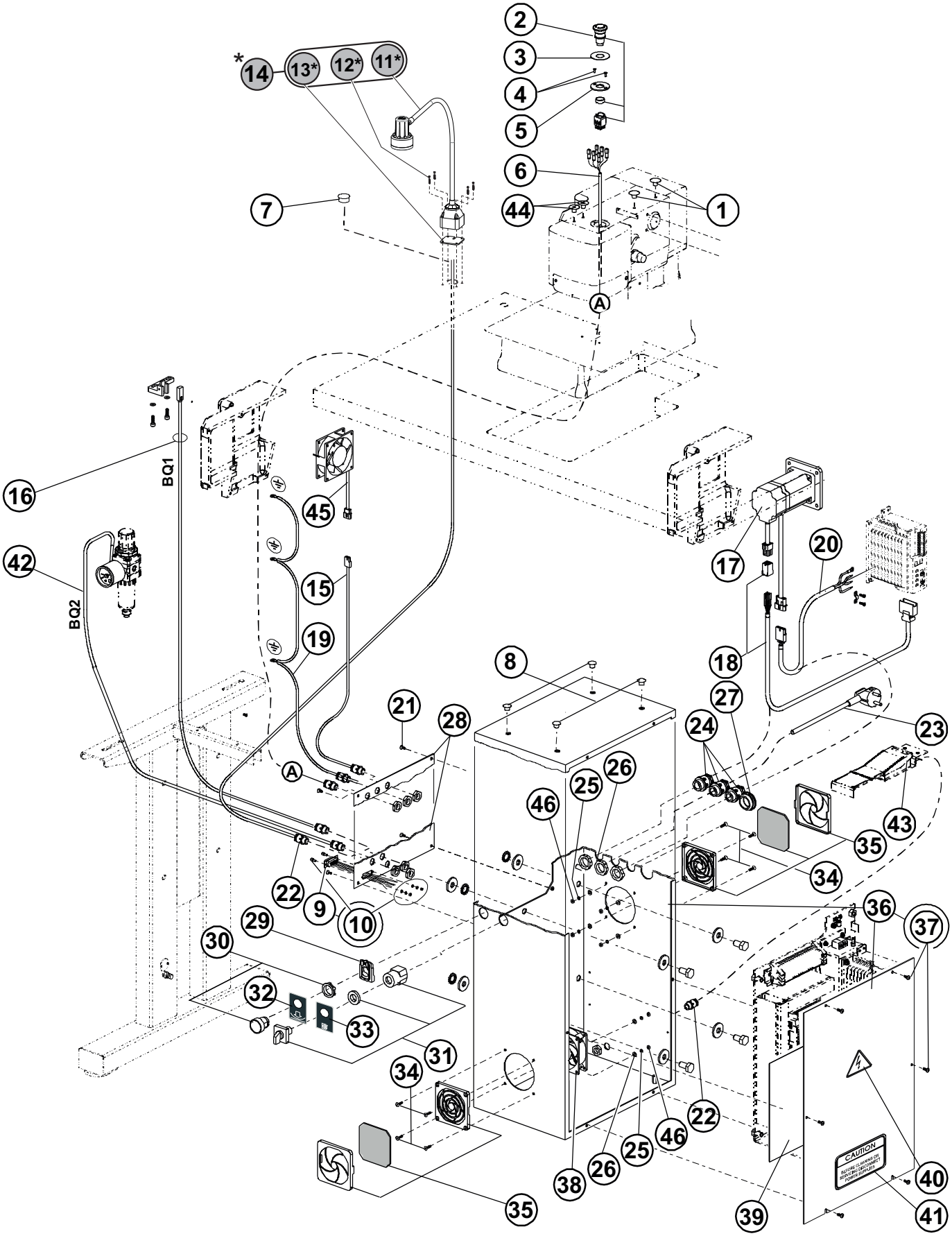

ELECTRICAL - I TABLE EMBEDDED

DET	PART NUMBER	DESCRIPTION	QTY.
43	See Page 3-49	Cable	—
44	08.6215.4.006	Screw	2
45	24.0059.9.069	Fan	1
46	08.6702.4.000	Nut M4	8

* — Extra parts

ELECTRICAL - II

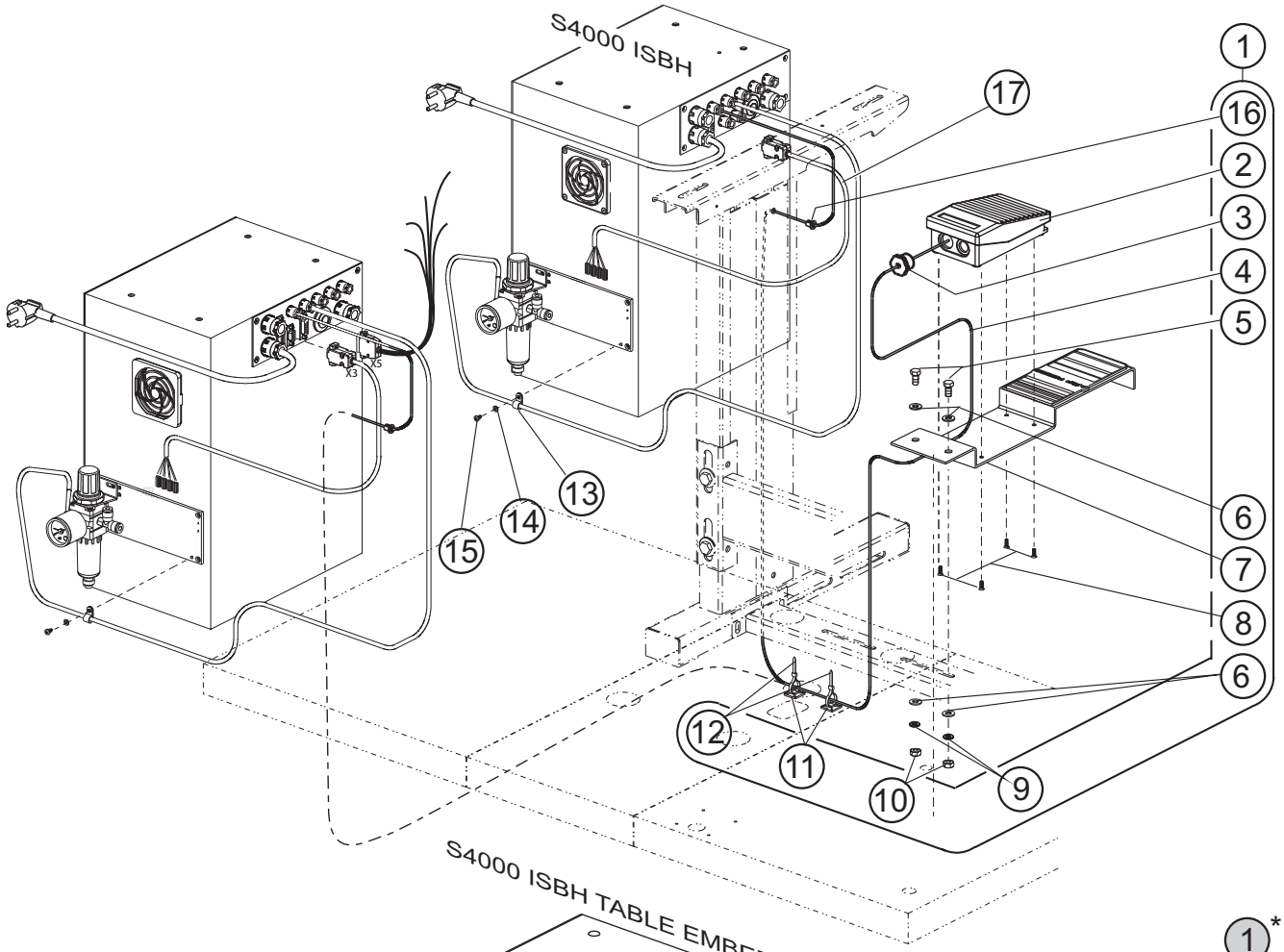

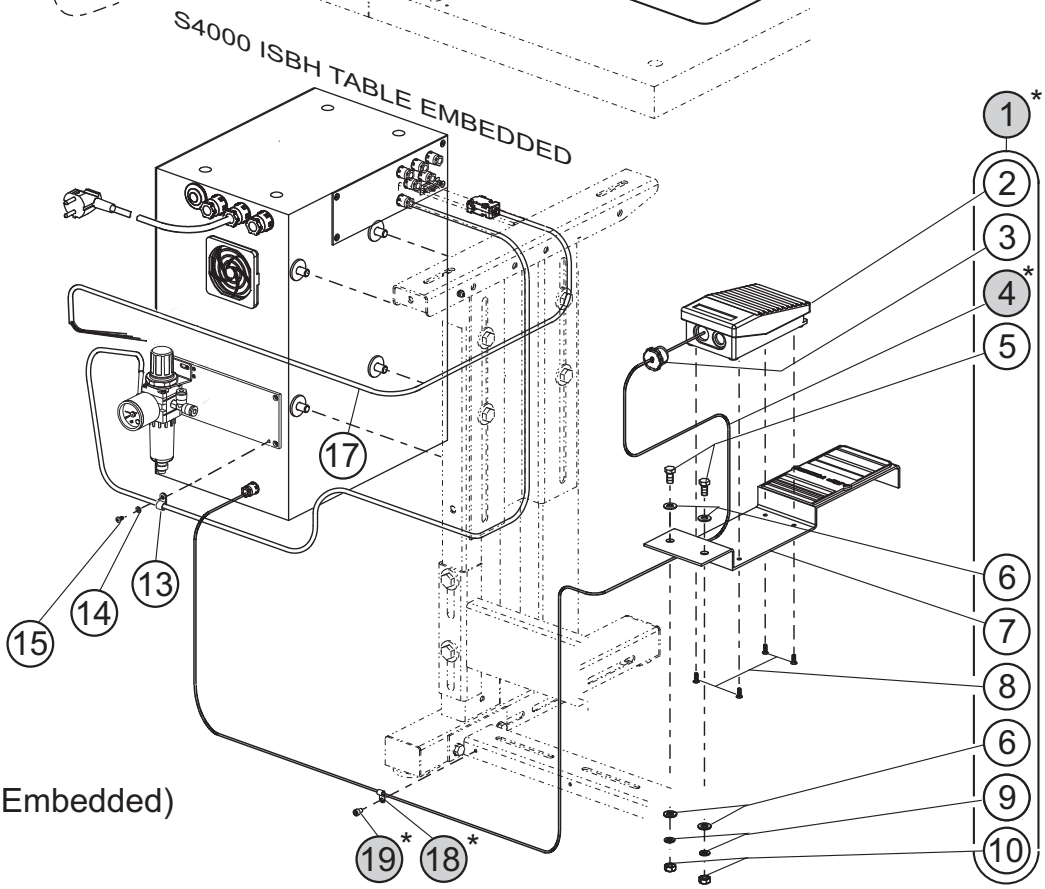

* — S4000 ISBH (Embedded)

Revised: 06/2023
E-mail: info@amfreece-cars.cz

ELECTRICAL - II

DET	PART NUMBER	DESCRIPTION		QTY.
01	24.0069.9.009	Pedal Assembly		1
01*	24.0069.9.038	Pedal Assembly		1*
02	06.8800.0.001	Pedal	●●●	(1)
03	12.0008.4.296	Bushing	●●●	(1)
04	24.0069.9.003	Cable		(1)
04*	24.0069.9.306	Cable		(1)*
05	08.6312.8.020	Screw M8x20		(2)
06	08.6852.8.000	Washer M8		(4)
07	24.0097.0.000	Holder Pedal		(1)
08	08.6100.4.012	Screw M4x12		(4)
09	08.6802.8.000	Spring Washer M8		(2)
10	08.6702.8.000	Nut M8		(2)
11	12.0008.4.058	Clip		(2)
12	12.0008.4.072	Ty-wrap		(2)
13	12.0008.4.280	Cord Clamp		1
14	08.6852.4.000	Washer M4		1
15	08.6683.4.007	Screw M4x7		1
16	12.0008.4.214	Bushing		(1)
17	12.0008.3.833	Cable Valve		1
18*	12.0008.4.279	Cord Clamp		(1)*
19*	08.6000.5.008	Screw M5x8		(1)*

* Modification — ISBH (Embedded)

ELECTRICAL - III

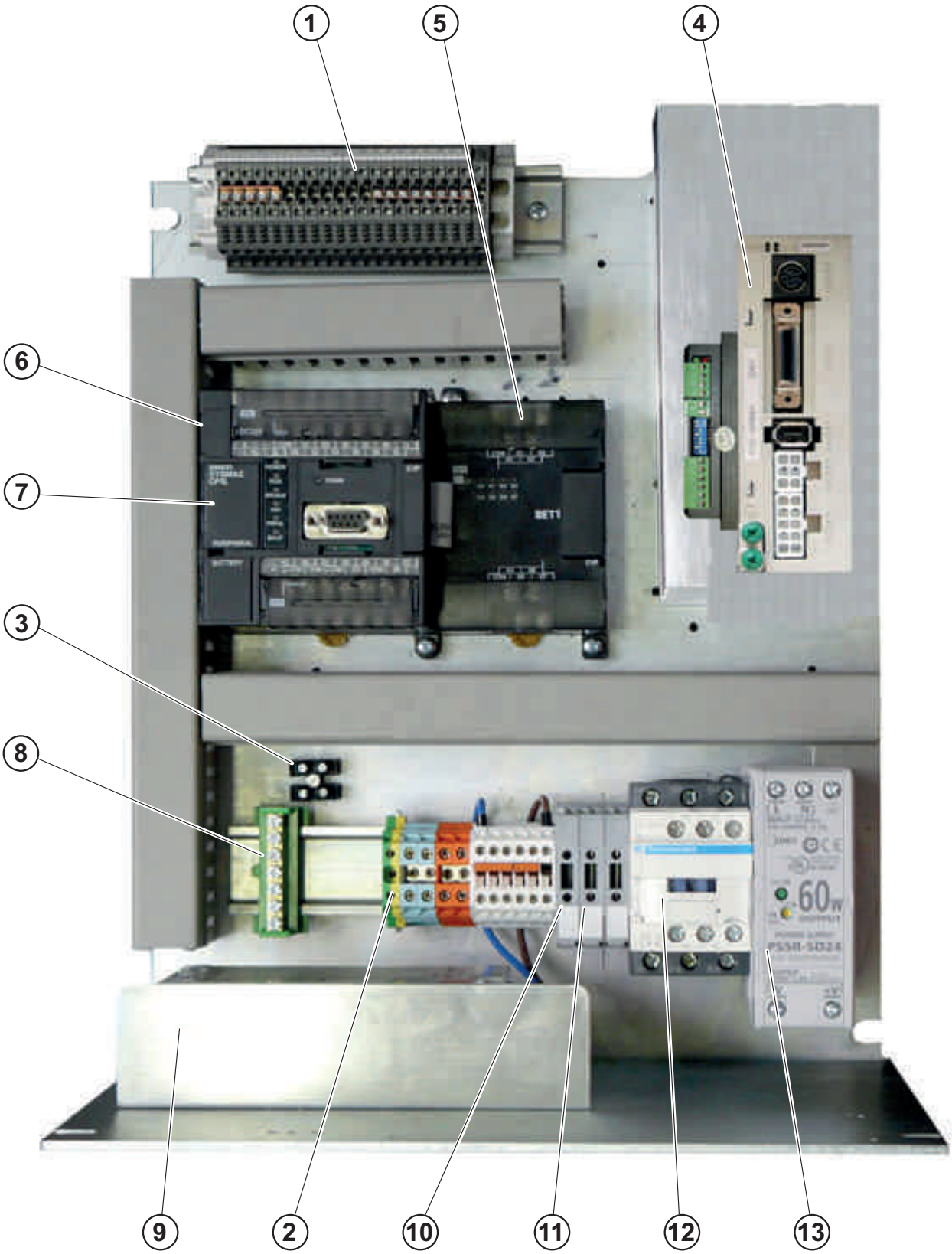

ELECTRICAL - III

DET	PART NUMBER	DESCRIPTION		QTY.
01		TERMINAL x1		1
02		TERMINAL X0 - POWER		1
03		TERMINAL X12 - FAN		1
04	24.8001.2.005	SERVODRIVE	(U1)	
05	12.0010.4.071	EXTPASION BLOCK	(LT)	
06	24.8001.2.001	PCL		1
07	12.0010.4.067	PORT RS 232		1
08	12.0008.4.050	BRIDGE GND		1
09	12.0010.4.078	FILTER	(Z2)	1
10	12.0008.4.665	FUSE T2A		1
11	12.0008.4.664	FUSE T10A		1
12	12.0008.4.833	CONTACTOR	(KM1)	1
13	12.0010.4.168	POWER	(GS1)	1

PANEL KIT

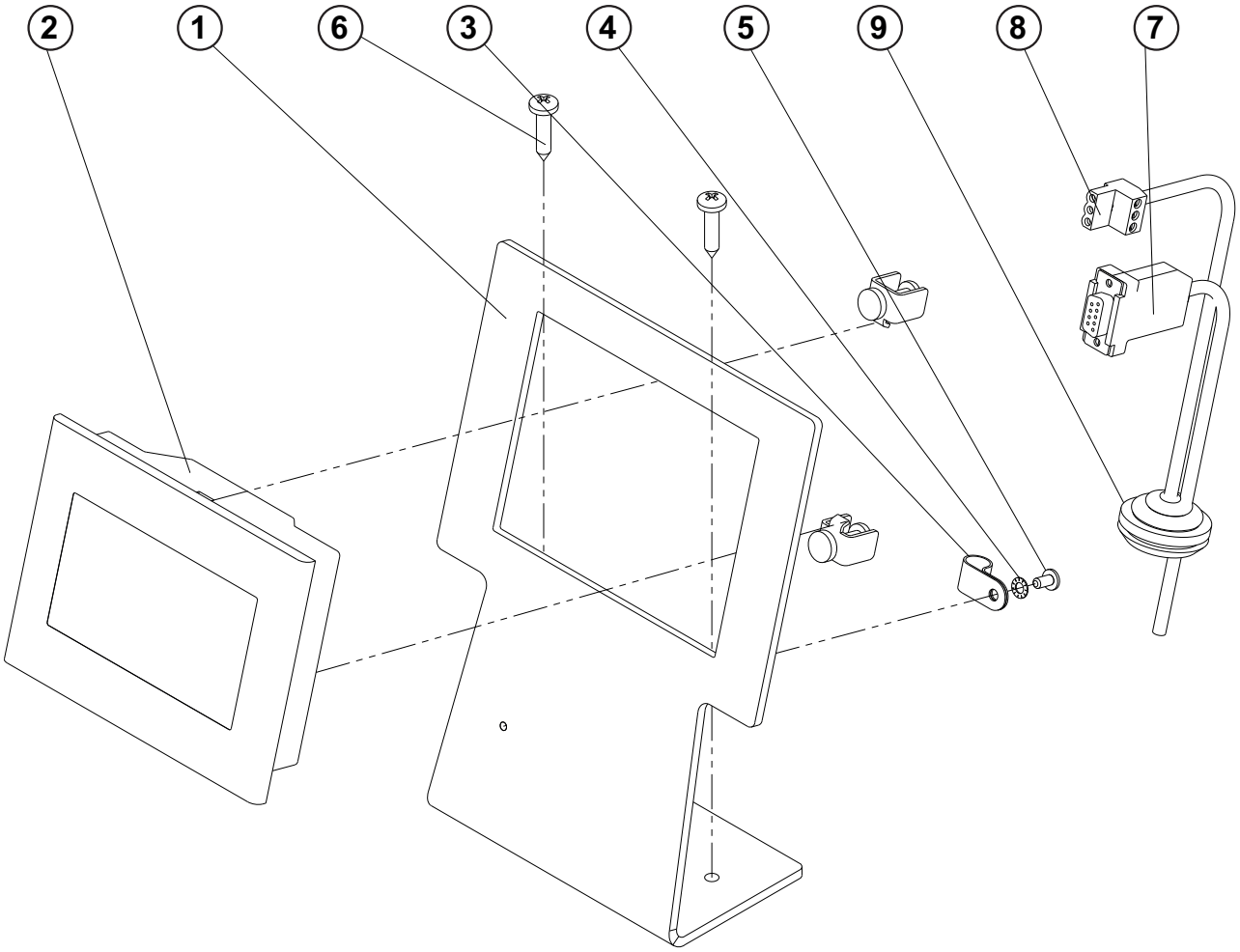

Revised: 06/2023
E-mail: info@amfreece-cars.cz

PANEL KIT

DET	PART NUMBER	DESCRIPTION	QTY.
01	24.0198.0.000	PANEL HOLDER-DELTA	1
02	24.8001.2.023	DISPLAY	1
03	07.6600.0.004	CLAMP CABLE	1
04	08.6832.4.000	WASHER M4	1
05	08.6032.4.008	SCREW M4-8	1
06	08.6663.5.025	SCREW 4,8-25	2
07	06.2400.0.023	CABLE DISPLAY DELTA	1
08	06.2400.0.019	CABLE DISPLAY DELTA POWER	1
09	12.0008.4.366	RUBBER PLUG 29	1

PNEUMATICS

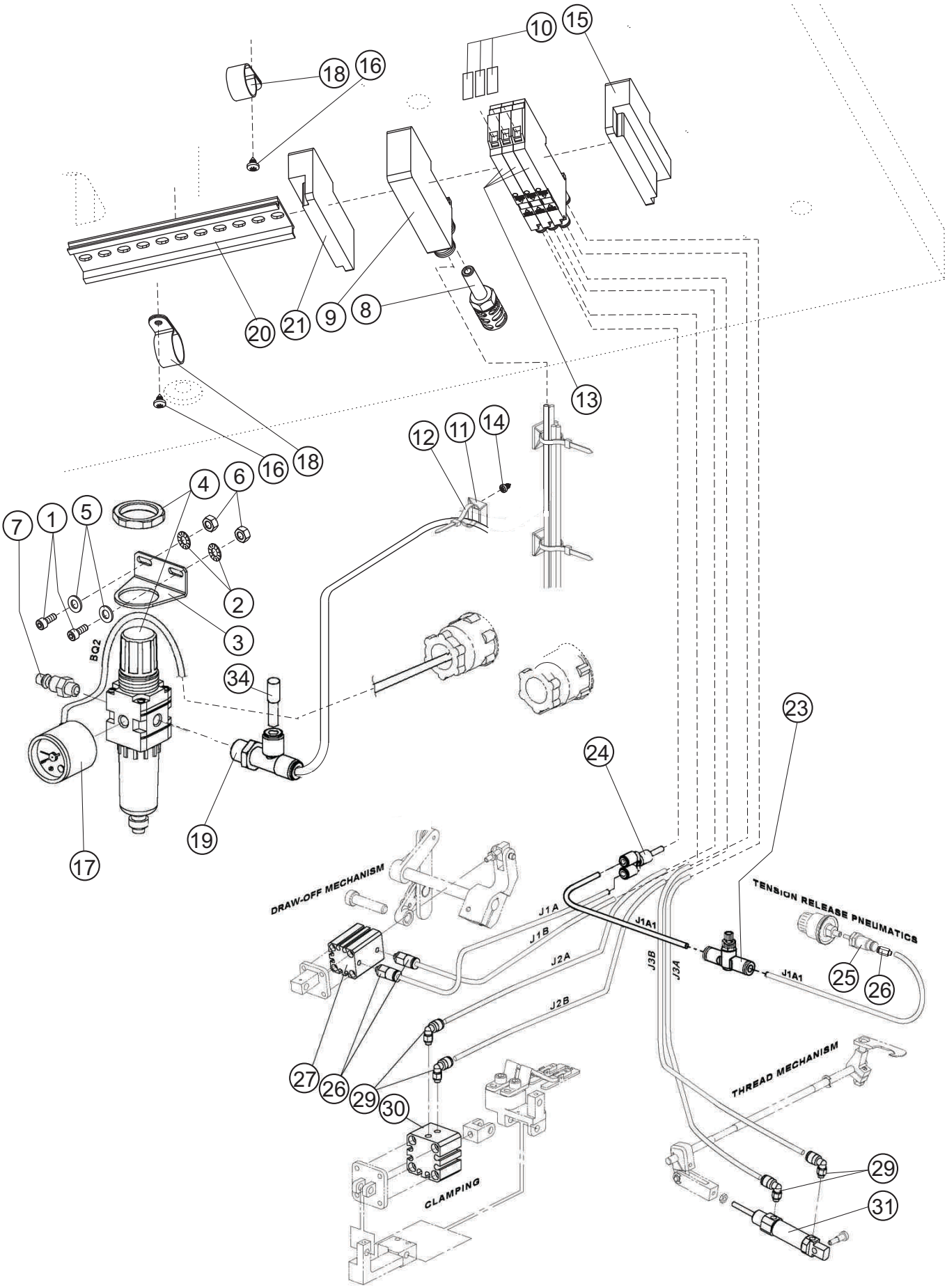

Revised: 06/2023
E-mail: info@amfreece-cars.cz

PNEUMATICS

DET	PART NUMBER	DESCRIPTION		QTY.
01	08.6000.5.012	Screw M5x12		2
02	08.6832.5.000	Washer M5		2
03	12.0010.3.138	Regulator Holder		1
04	12.0010.3.137	Regulator		1
05	08.6850.5.000	Washer M5		2
06	08.6700.5.000	Nut M5		2
07	12.0008.3.420	Connector		1
08	12.0010.3.030	Silencer		1
09	12.0008.3.829	Air Supply Block Assembly		1
10	12.8000.0.016	Label Kit		1
11	12.0008.4.058	Clip	●●●	3
12	12.0008.3.023	Ty-wrap	●●●	3
13	12.0008.3.828	Pneumatic Valve		3
14	08.6662.3.006	Screw		2
15	12.0008.3.830	Rail Stopper		1
16	08.6683.4.007	Screw		2
17	12.0008.3.418	Pressure Gauge		1
18	12.0008.4.280	Clamp		2
19	12.0010.3.032	Connector		1
20	12.0008.3.832	DIN Rail		1
21	12.0008.3.831	Rail Stopper		1
23	12.0010.3.029	Speed Controller	●●●	1
24	12.0010.3.159	Connector		1
25	12.0008.3.413	Cylinder		1
26	12.0010.3.027	Connector		3
27	12.0008.3.433	Knife Cylinder		1
29	12.0010.3.028	Connector	●●●	4
30	12.0008.3.412	Clamp Cylinder	●	1
31	24.0050.1.000	Trimmer Cylinder		1
32	24.0145.1.000	Air Tubing 6x1 BL J0I1 = 1500 mm	●●●	1
		Air Tubing 4x0,75 BL J1A = J1B = J1A1= J2A = J2B = J3A = J3B = 600 mm		
34	12.0008.3.437	Plug		1

ACCESSORIES

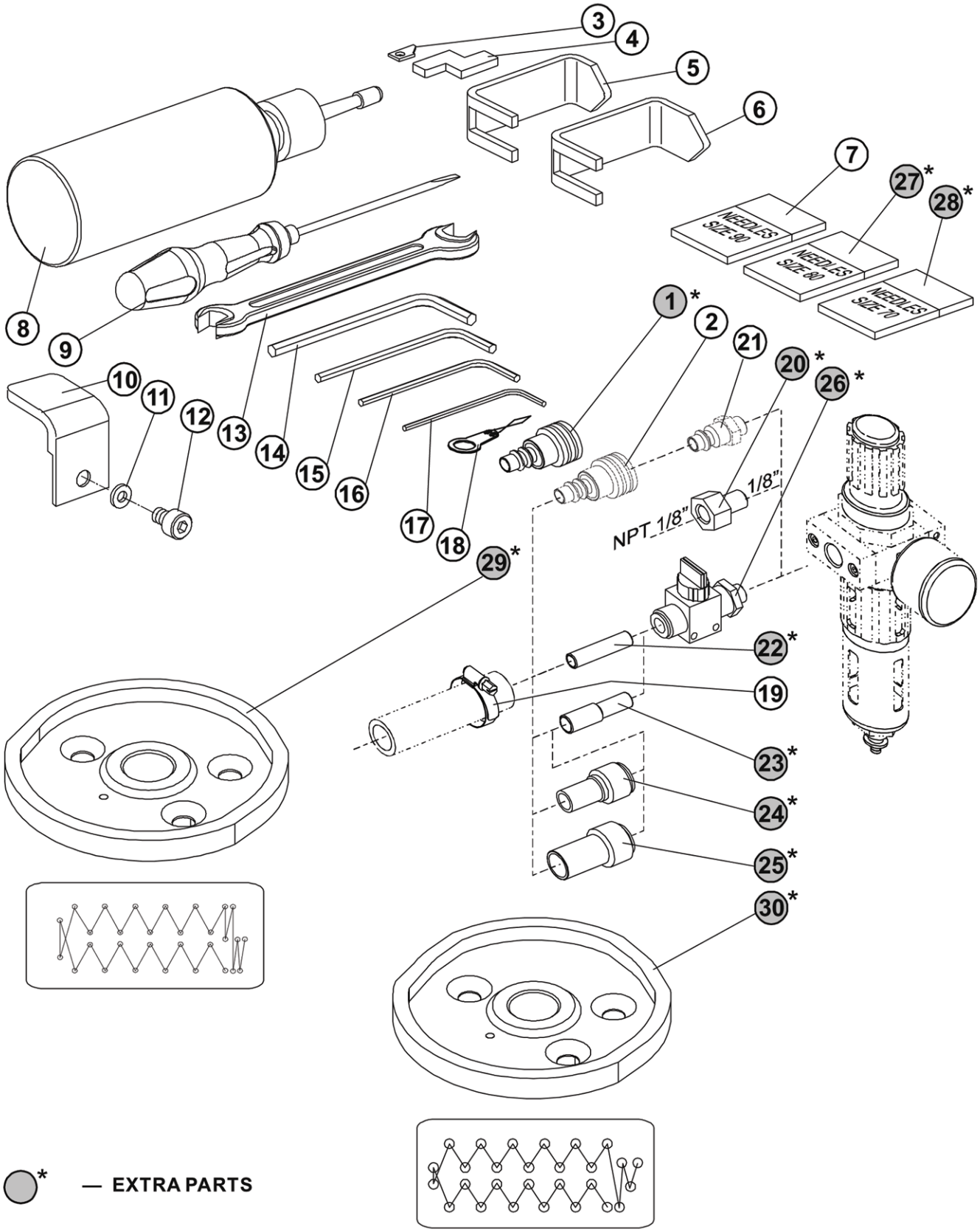

* — EXTRA PARTS

Revised: 06/2023
E-mail: info@amfreece-cars.cz

ACCESSORIES

DET	PART NUMBER	DESCRIPTION	QTY.
01*	12.0008.3.607	Connector Dia 8	1*
02	12.0008.3.608	Connector Dia 10	1
03	20.0094.0.000	Trimmer Knife	1
04	22.0209.0.000	Looper Gauge	1
05	24.0030.0.000	Main Shaft Pulley Bracket	1
06	24.0024.0.000	Needle Bar Shaft Pulley Bracket	1
07	02.0750.2.110	Needles, Size 90	10
08	05.1322.0.000	Oiler ●●●	1
09	12.0008.6.001	Screwdriver	1
10	22.0213.0.000	Bracket	1
11	08.6850.4.000	M4 Washer	1
12	08.6000.4.005	M4 x 5 Screw	1
13	12.0008.6.109	Wrench	1
14	12.0008.6.102	Allen Key Wrench 4	1
15	12.0008.6.101	Allen Key Wrench 3	1
16	12.0008.6.112	Allen Key Wrench 2-1/2	1
17	12.0008.6.100	Allen Key Wrench 2	1
18	12.0008.6.105	Needle Threader	1
19	12.0008.3.251	Air Tubing Clamp	1
20*	12.0008.3.081	Pneumatic Adapter (1/8” / NPT 1/8”)	1
21	See page 3-53	Connector	—
22*	12.0008.3.464	Connector	—
23*	12.0008.3.466	Connector	—
24*	12.0008.3.467	Connector	—
25*	12.0008.3.465	Connector	—
26*	12.0008.3.463	Handvalve	—
27*	02.0750.2.100	Needle, Size 80	—
28*	02.0750.2.109	Needle, Size 70	—
29*	24.3079.0.000	Main Cam ISBH - Type II.	—
30*	24.3080.0.000	Main Cam ISBH	—

* — Extra Parts

ACCESSORIES EXTRA PARTS

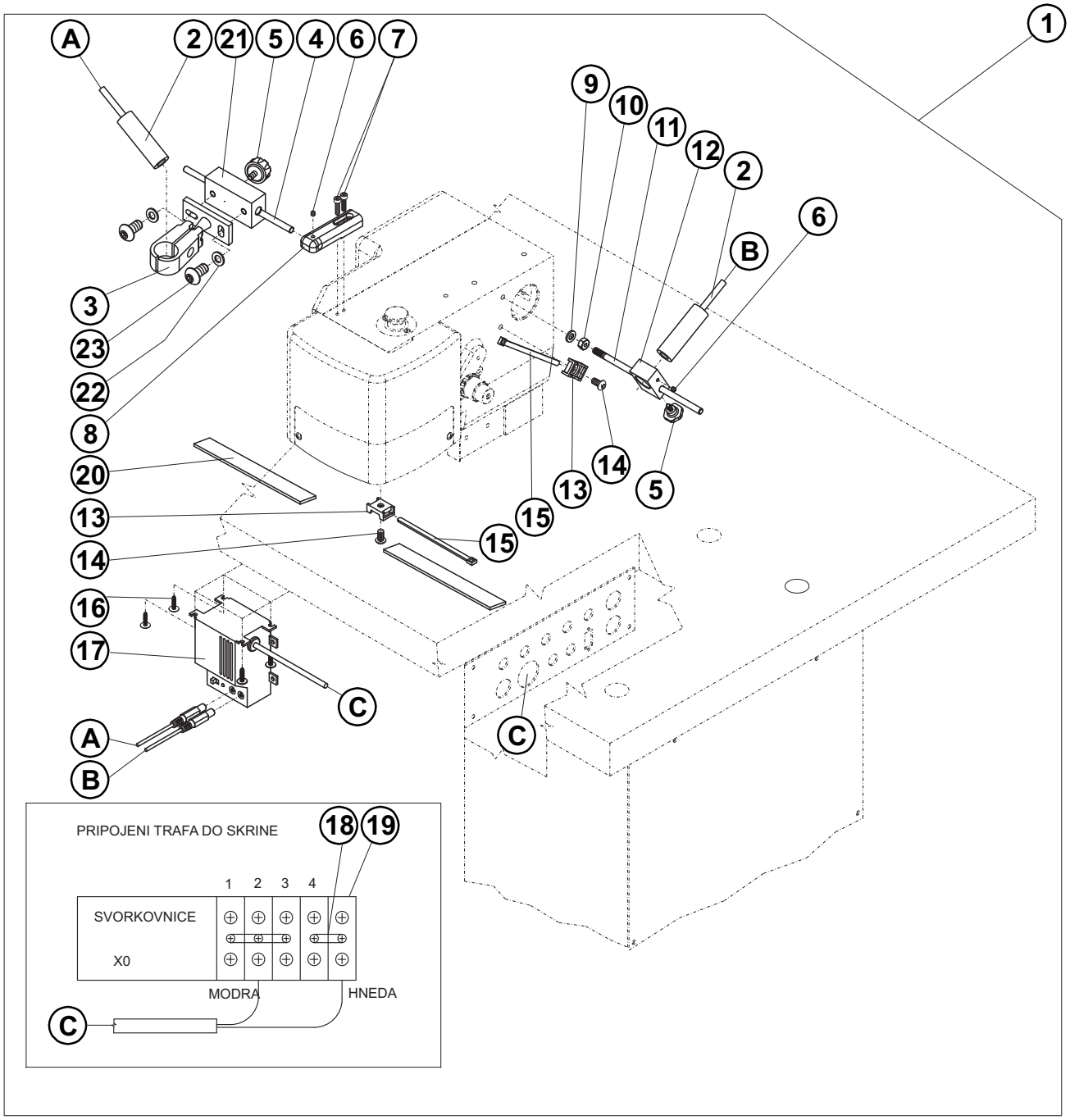

ACCESSORIES EXTRA PARTS

DET	PART NUMBER	DESCRIPTION	QTY.
01	03.5524.0.022	Laser Light Kit	
02	12.0010.4.143	Laser LR 14 LD Line Red	2
03	12.0010.4.142	Bracket 36 Balljoint	1
04	24.3084.0.000	Led Holder Left	1
05	12.0008.6.982	Screw Plastic M4-8	2
06	08.6400.4.004	Screw M4 x 4 Din 916	2
07	08.6000.4.014	Screw M4 x 4 Din 912	2
08	24.3082.0.000	Led Bracket	1
09	08.6852.6.000	Washer 6,4	1
10	08.6702.6.000	Nut M6	1
11	24.3083.0.000	Led Holder Right	1
12	24.3090.0.000	Laser Holder Left	1
13	12.0010.4.052	Cable Tie Clamp HC-2	2
14	08.6202.6.012	Screw M6-12	2
15	12.0008.4.072	Cable Tie 130mm (120)	5
16	08.6676.3.020	Vrut 3,5-20 BN 8702	4
17	24.0069.9.047	Power 2 Lasers	1
18	12.0008.4.661	Bridge 2RSA 1,5A	1
19	12.0008.4.657	Terminal RSA 1,5A	1
20	12.0008.6.981	Teflon Tape - 0,5 M	1
21	24.3091.0.000	Laser Holder Right	1
22	08.6850.5.000	Washer 5,3	2
23	08.6200.5.010	Screw M5x10	2

MECHANICAL INDEXER - LINEAR GUIDE - EXTRA PARTS

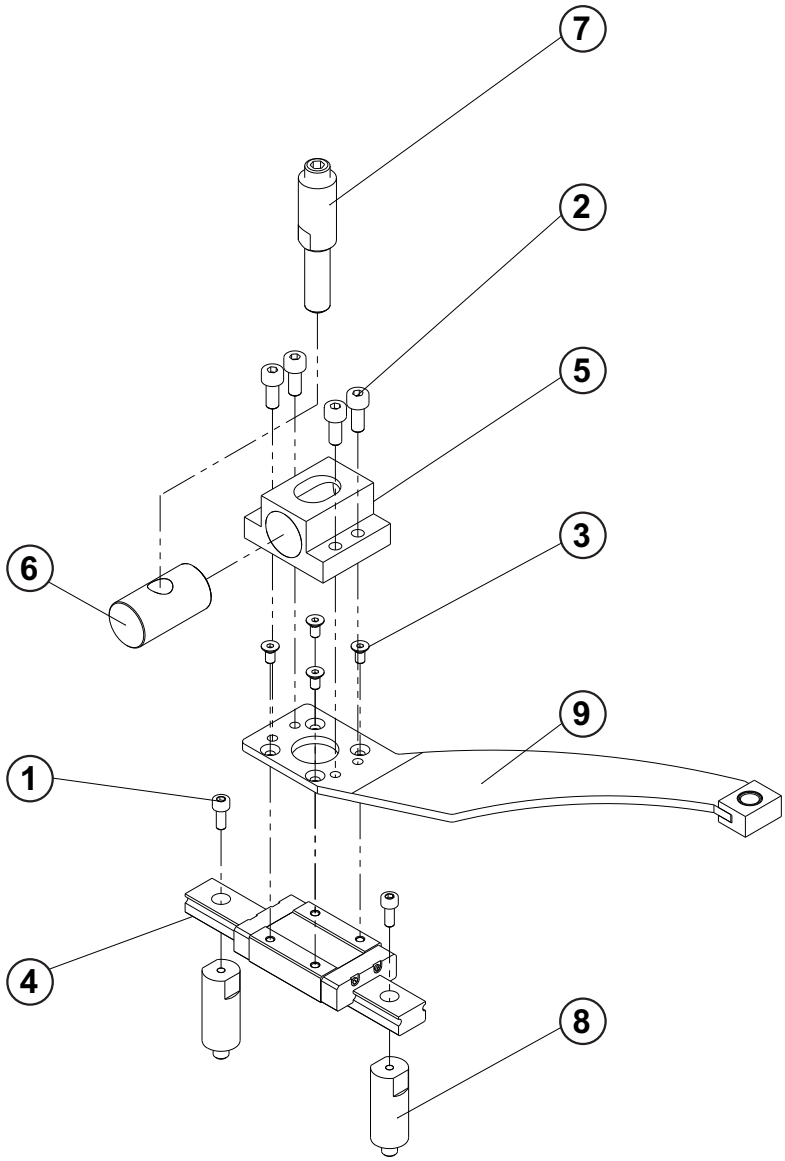

Revised: 06/2023
E-mail: info@amfreece-cars.cz

MECHANICAL INDEXER - LINEAR GUIDE - EXTRA PARTS

DET	PART NUMBER	DESCRIPTION	QTY.
01	08.6002.3.008	SCREW M3x8	2
02	08.6002.4.010	SCREW M4x10	4
03	08.6100.3.006	SCREW M3x6	4
04	12.2070.1.012	GUIDE	1
05	24.4026.1.000	PILLOW BLOCK	1
06	24.4027.0.000	PLASTIC JOINT	1
07	24.4028.1.000	STUD ASM.	1
08	24.4087.0.000	STUD	2
09	24.4426.0.000	CROSS LEVER	1

MECHANICAL INDEXER - CROSS LEVER ASSEMBLY - EXTRA PARTS

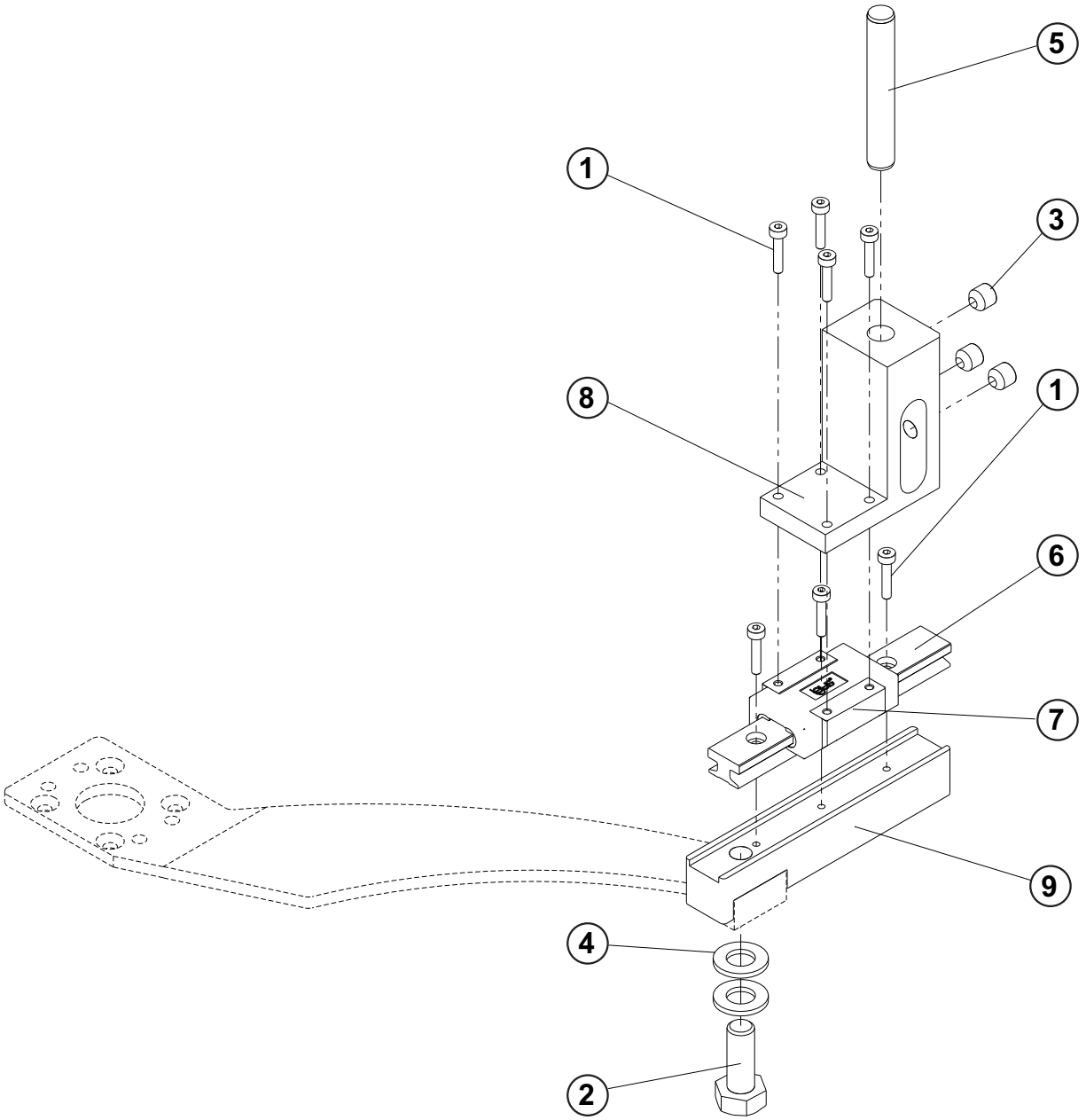

MECHANICAL INDEXER - CROSS LEVER ASSEMBLY - EXTRA PARTS

DET	PART NUMBER	DESCRIPTION	QTY.
01	08.6002.2.010	SCREW M2x10	7
02	08.6312.6.016	SCREW M6x16	1
03	08.6402.5.005	SCREW M5x5	3
04	08.6852.6.000	WASHER M6	2
05	12.1010.2.052	PIN 6x40	1
06	12.2070.1.075	LINEAR RAIL	1
07	12.2070.1.076	LINEAR GUIDE	1
08	24.4418.0.000	CONNECTING PART	1
09	24.4419.0.000	LINEAR BEARING HOLDER	1

MECHANICAL INDEXER - CLAMPING CONNECTING PARTS - EXTRA PARTS

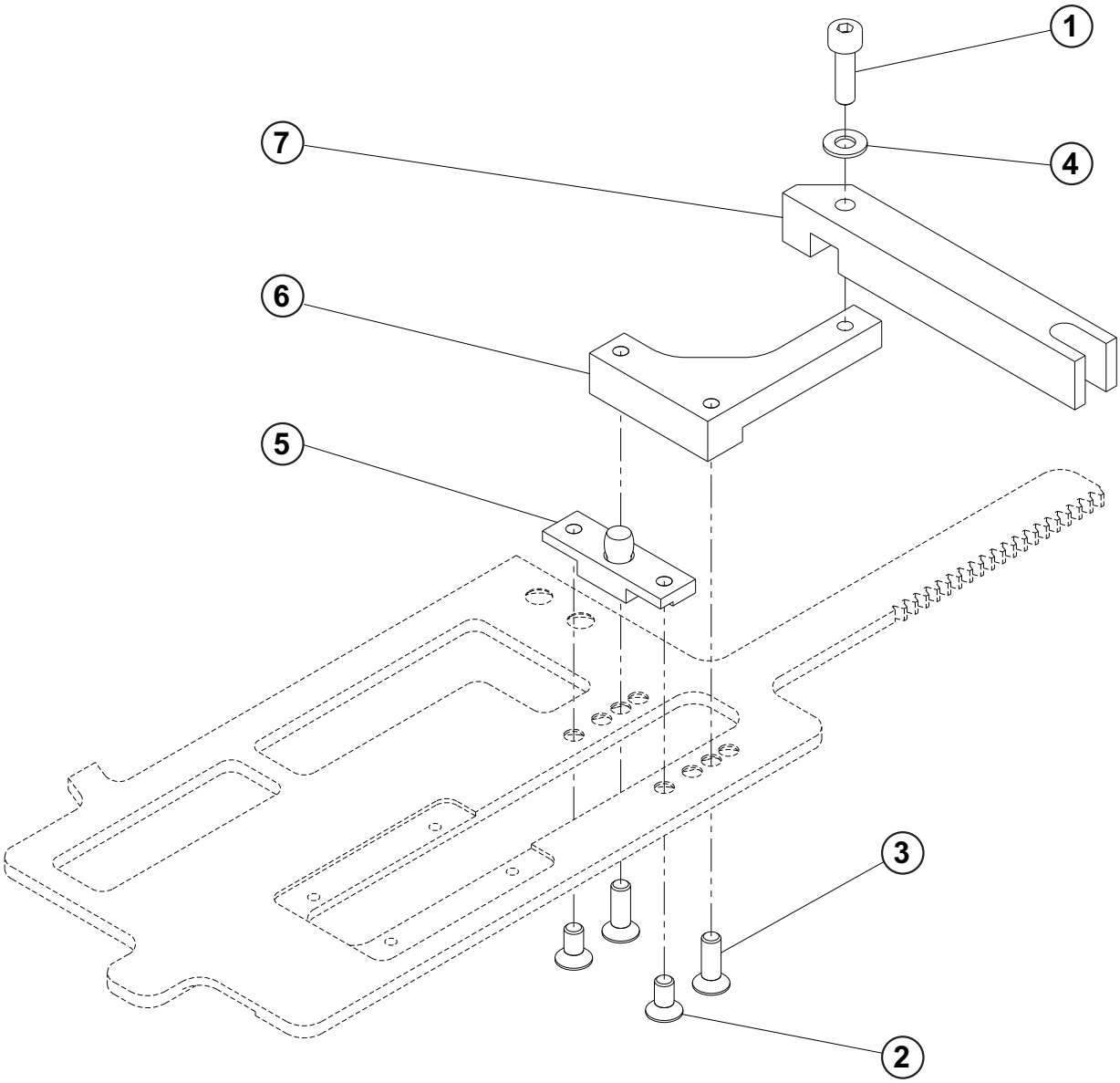

Revised: 06/2023
E-mail: info@amfreece-cars.cz

MECHANICAL INDEXER - CLAMPING CONNECTING PARTS - EXTRA PARTS

DET	PART NUMBER	DESCRIPTION	QTY.
01	08.6002.4.014	SCREW M4x14	1
02	08.6102.4.006	SCREW M4x6	2
03	08.6102.4.012	SCREW M4x12	2
04	08.6852.4.000	WASHER M4	1
05	24.4103.0.000	BRACKET, INDEXER CLAMPING	1
06	24.4420.0.000	BRACKET	1
07	24.4421.0.000	CONNECTING LEVER	1

MECHANICAL INDEXER - CLAMPING ASSEMBLY - EXTRA PARTS

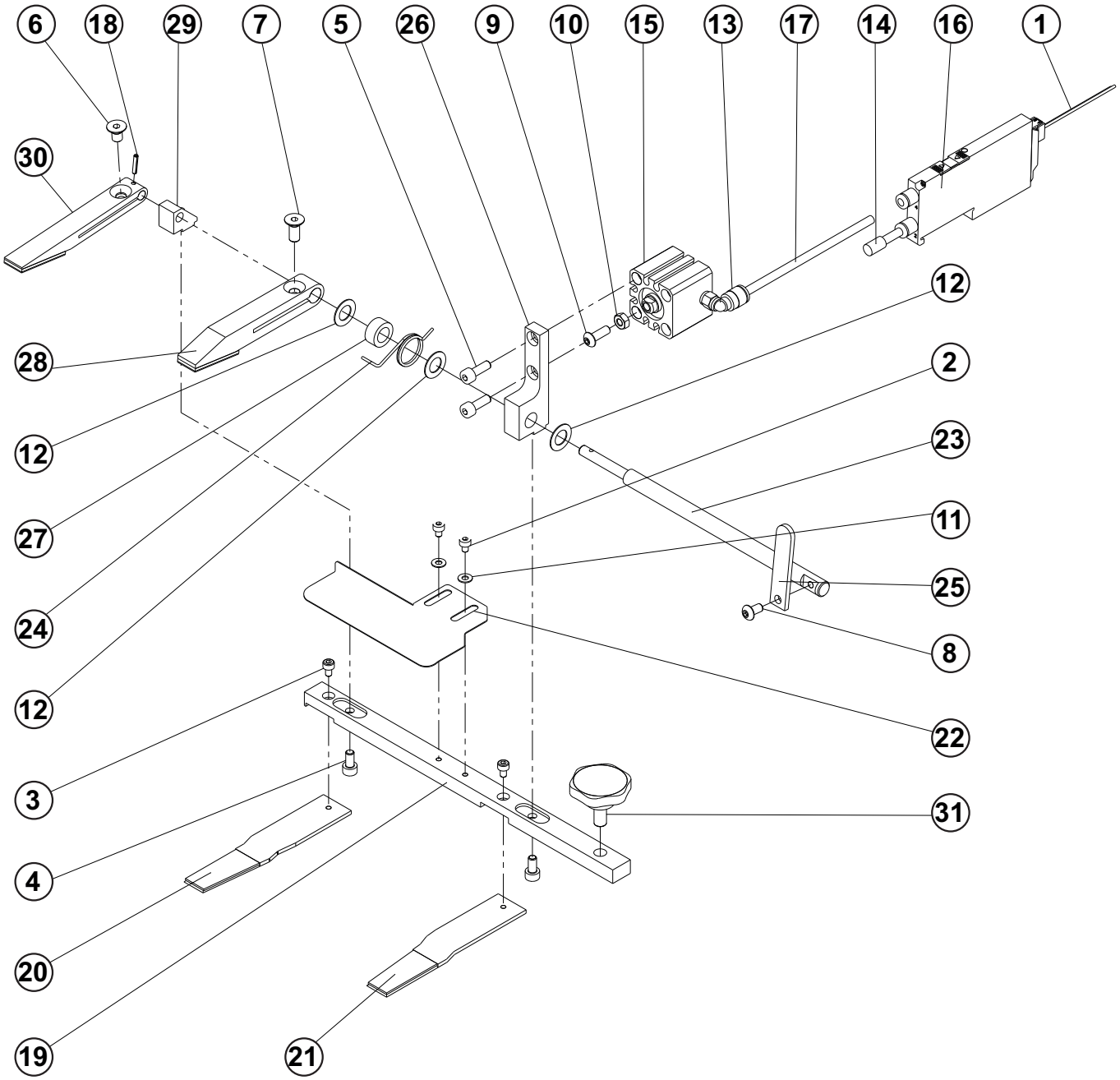

Revised: 06/2023
E-mail: info@amfreece-cars.cz

MECHANICAL INDEXER - CLAMPING ASSEMBLY - EXTRA PARTS

DET	PART NUMBER	DESCRIPTION	QTY.
01	06.2400.2.027	MECHANICAL INDEXER Y10 ASSY	1
02	08.6000.3.004	SCREW M3-4	2
03	08.6000.3.005	SCREW M3-5	2
04	08.6002.4.008	SCREW M4-8	2
05	08.6002.4.012	SCREW M4-12	2
06	08.6102.5.008	SCREW M5-8	1
07	08.6102.5.012	SCREW M5-12	1
08	08.6202.4.008	SCREW M4-8	1
09	08.6202.4.010	SCREW M4-10	1
10	08.6702.4.000	NUT M4	1
11	08.6850.3.000	WASHER 3,2	2
12	08.6887.8.000	DISTANCE WASHER 0,5x8x14	3
13	12.0008.3.411	CONNECTOR	1
14	12.0008.3.426	PLUG	1
15	12.0008.3.498	CYLINDER	1
16	12.0008.3.828	5/2 VALVE	1
17	12.0010.3.080	AIR TUBE- J10A	1
18	12.1014.0.004	PIN 2x8	1
19	24.4005.0.000	CLAMP RAIL	1
20	24.4006.0.000	CLAMPING MAT LEFT	1
21	24.4007.0.000	CLAMPING MAT RIGHT	1
22	24.4008.0.000	MATERIAL GUIDE	1
23	24.4009.0.000	SHAFT	1
24	24.4010.0.000	SPRING	1
25	24.4011.0.000	CLAMPING LEVER	1
26	24.4013.0.000	HOLDER CYLINDER	1
27	24.4014.0.000	BUSHING	1
28	24.4015.0.000	CLAMP FOOT RIGHT	1
29	24.4016.0.000	HOLDER CYLINDER	1
30	24.4017.0.000	CLAMP FOOT LEFT	1
31	24.4428.0.000	SCREW	1

MECHANICAL INDEXER - BASE - EXTRA PARTS

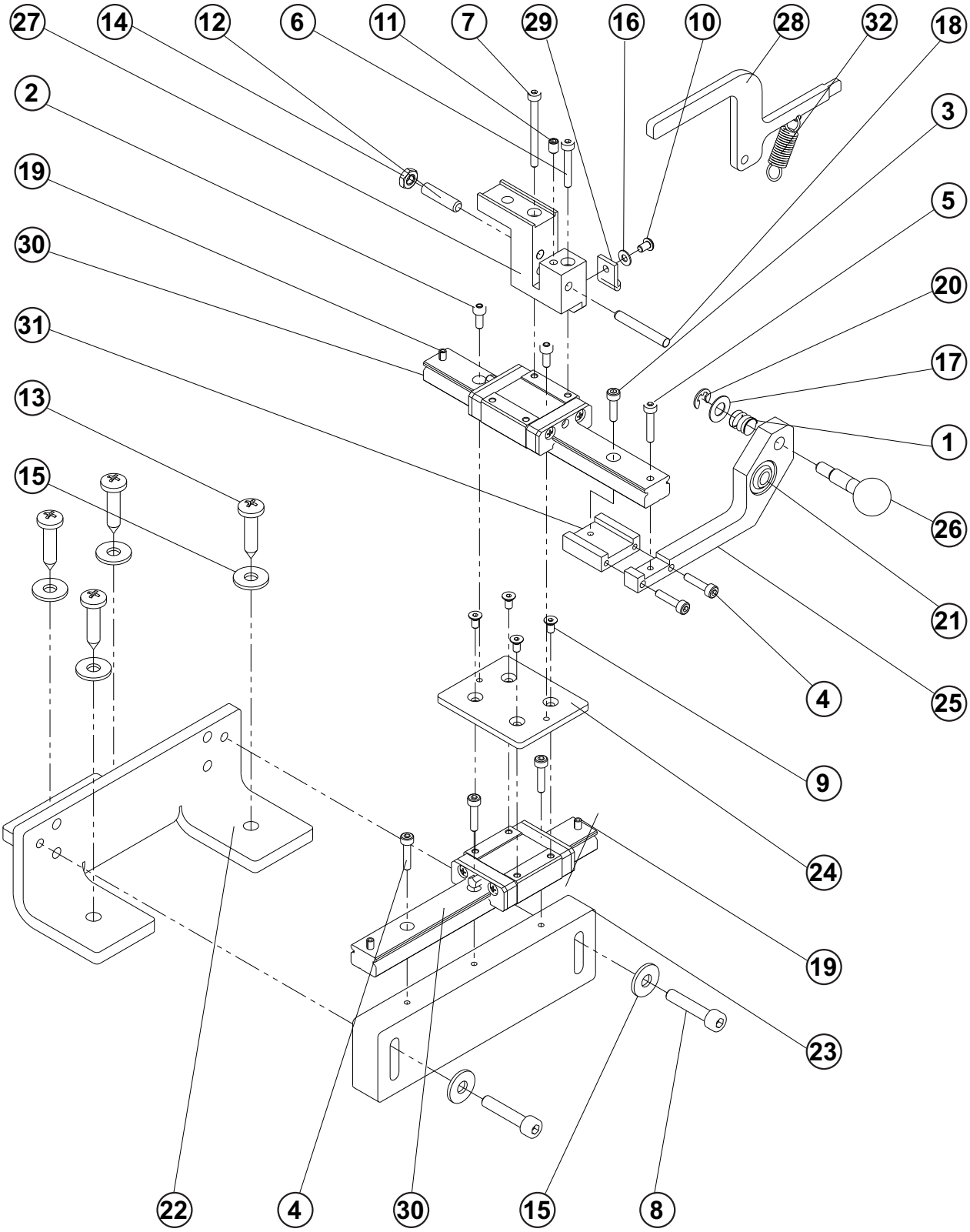

Revised: 06/2023
E-mail: info@amfreece-cars.cz

MECHANICAL INDEXER - BASE - EXTRA PARTS

DET	PART NUMBER	DESCRIPTION	QTY.
01	01.5002.0.000	SPRING-COMPRESSION	1
02	08.6002.3.008	SCREW M3-8	2
03	08.6002.3.012	SCREW M3-12	1
04	08.6002.3.014	SCREW M3-14	5
05	08.6002.3.016	SCREW M3-16	1
06	08.6002.3.020	SCREW M3-20	1
07	08.6002.3.035	SCREW M3-35	1
08	08.6002.5.025	SCREW M5-25	2
09	08.6102.3.006	SCREW M3-6	4
10	08.6202.3.005	SCREW M3-5	1
11	08.6402.4.006	SCREW M4-6	1
12	08.6412.5.020	SCREW M5-8	1
13	08.6663.5.025	SCREW 4,8-25	4
14	08.6712.5.000	NUT M5	1
15	08.6842.5.000	WASHER 5	6
16	08.6852.3.000	WASHER M3	1
17	08.6887.6.500	WASHER 6x12-0,5	1
18	12.1010.2.053	PIN 4h6x30	1
19	12.1014.0.314	PIN 3x14	3
20	12.1045.0.004	RETAINING RING 4	1
21	12.2085.0.005	BUSHING	1
22	24.4401.0.000	BASE PLATE	1
23	24.4402.0.000	BASE	1
24	24.4403.0.000	LINEAR BEARING PLATE	1
25	24.4404.0.000	BRACKET	1
26	24.4405.0.000	LOCKING STUD	1
27	24.4422.0.000	HODER	1
28	24.4423.0.000	LEVER	1
29	24.4425.0.000	HOLDER	1
30	24.4427.0.000	GUDIE	2
31	24.4429.0.000	SIDE BLOCK	1
32	36542017	SPRING	1

MECHANICAL INDEXER - RANGE MECHANISM - EXTRA PARTS

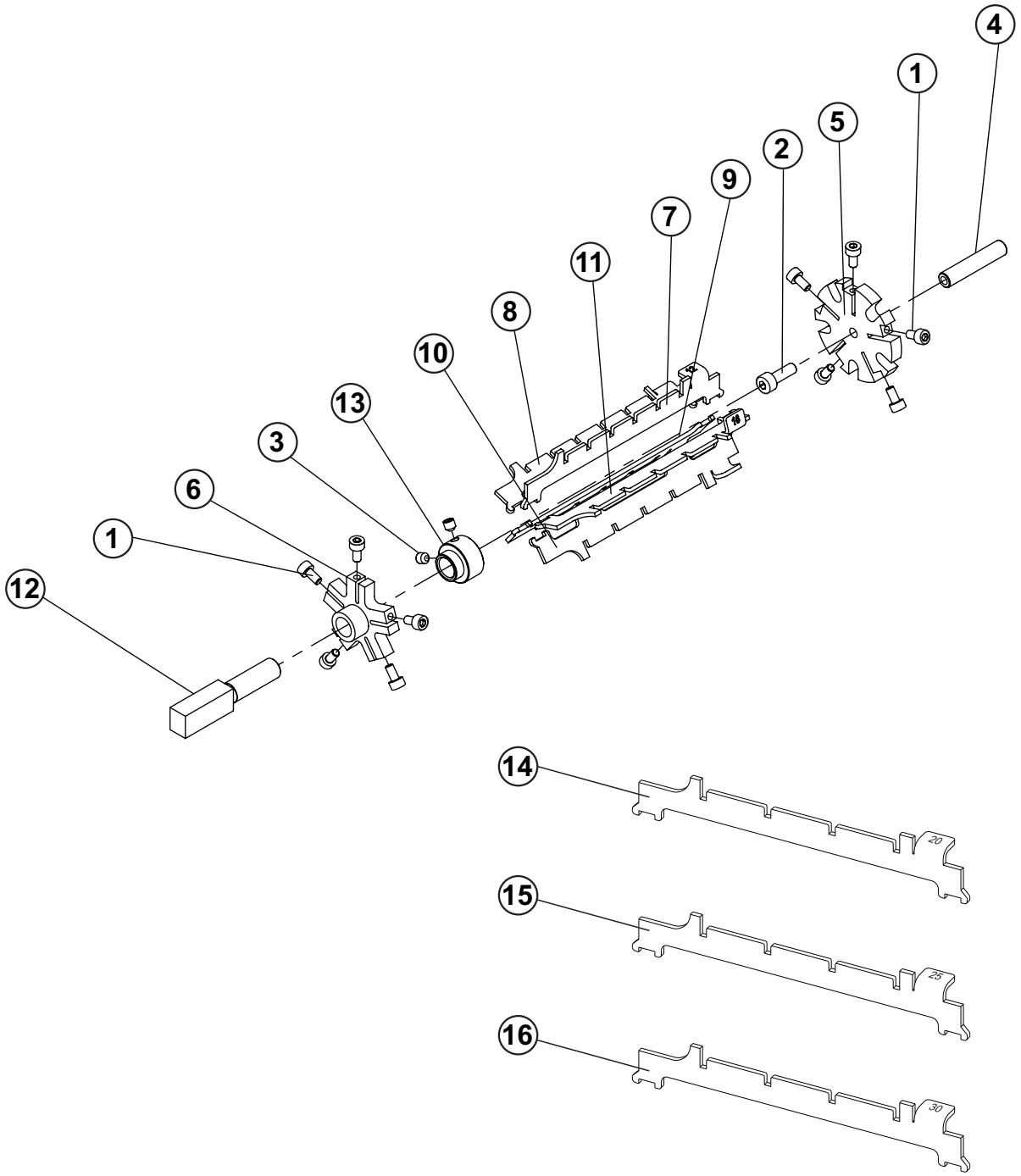

Revised: 06/2023
E-mail: info@amfreece-cars.cz

MECHANICAL INDEXER - RANGE MECHANISM - EXTRA PARTS

DET	PART NUMBER	DESCRIPTION	QTY.
01	08.6002.3.006	SCREW M3x6	10
02	08.6002.4.012	SCREW M4x12	1
03	08.6402.4.004	SCREW M4x4	2
04	24.4406.0.000	STUD	1
05	24.4407.0.000	FLANGE	1
06	24.4408.0.000	FLANGE	1
07	24.4409.0.000	INDEXER PLATE - RANGE 12mm	1
08	24.4410.0.000	INDEXER PLATE - RANGE 13mm	1
09	24.4411.0.000	INDEXER PLATE - RANGE 14mm	1
10	24.4412.0.000	INDEXER PLATE - RANGE 15mm	1
11	24.4413.0.000	INDEXER PLATE - RANGE 16mm	1
12	24.4417.0.000	STUD	1
13	24.4424.0.000	COLLAR	1
14	24.4414.0.000	Indexer Plate - Range 20 mm	1
15	24.4415.0.000	Indexer Plate - Range 25 mm	1
16	24.4416.0.000	Indexer Plate - Range 30 mm	1

MECHANICAL INDEXER PEDAL - EXTRA PARTS

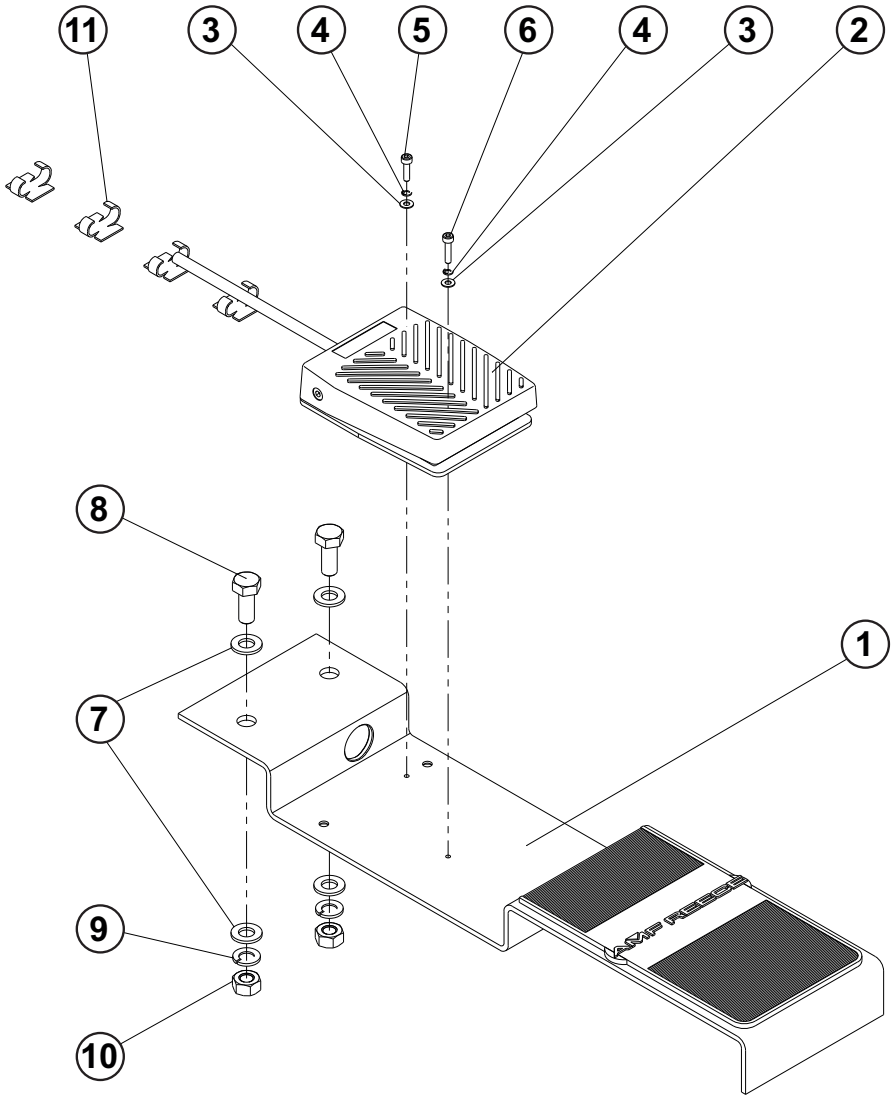

MECHANICAL INDEXER PEDAL - EXTRA PARTS

DET	PART NUMBER	DESCRIPTION	QTY.
01	24.0097.0.000	FOOT PEDAL HOLDER ASSY.	1
02	06.2400.2.026	MECHANICAL INDEXER PEDAL - OPTION	1
03	08.6852.3.000	WASHER M3	2
04	08.6802.3.000	SPRING WASHER M3	2
05	08.6002.3.012	SCREW M3-12	1
06	08.6002.3.014	SCREW M3-14	1
07	08.6852.8.000	WASHER M8	4
08	08.6312.8.020	SCREW M8-20	2
09	08.6802.8.000	SPRING WASHER M8	2
10	08.6702.8.000	NUT M8	2
11	12.0008.4.862	CLIPS-METAL	4

RECOMMENDED SPARE PARTS

No.	Part Number	Parts Description
01	07.6321.0.025	BRG, BALL CAM F. (INA)#LR605NPPU
02	20.0093.0.000	HOOK TRIMMER
03	20.0094.0.000	TRIMMER KNIFE
04	20.0111.0.000	LOOPER*FIRST
05	20.0112.0.000	LOOPER*SECOND
06	22.2657.0.000	RIGHT SHIFTER ARM SPRING
07	22.2653.0.000	LEFT SHIFTER ARM SPRING
08	23.2356.2.052	USA-KNIFE-1/2/13 M
09	23.2356.2.054	USA-KNIFE-5/8/16 MM
10	23.2356.2.055	USA-KNIFE-3/4/19 M
11	22.0353.0.000	DOUBLE GEAR
12	22.0313.0.000	FEED BRAKE PAD
13	08.6400.3.005	SCREW, H.S. SET, CUP, BLK
14	07.6440.0.018	SPRING, COMP. (LEE)
15	20.0092.0.004	TRIMMER ACTUATOR
16	01.2386.0.000	HEX SCREW 3/16-36 x.5
17	20.0093.2.004	HOOK-TRIMMER
18	23.3106.0.000	JIS FIRST LOOPER HOLDER
19	23.2107.0.000	SECOND LOOPER HOLDER
20	22.0520.0.000	NEEDLE BAR CLAMP
21	22.0530.0.000	NEEDLE BAR CONNECTING LINK
22	24.3077.0.000	MAIN CAM, ISBHMAIN CAM-ISBH
23	07.6440.0.028	SPRING (LEE) #LC-040C-01
24	22.2626.0.000	DRIVE DISK SWITCH SPRING

Revised: 06/2023
E-mail: info@amfreece-cars.cz

INDEX

PART NUMBER	PAGE	DET	QTY	PART NUMBER	PAGE	DET	QTY	PART NUMBER	PAGE	DET	QTY
36542017	3-67	32	1	06.2400.0.019	3-51	08	1	08.6000.4.005	3-13	58	2
00.2751.3.602	3-39	40	1	06.2400.0.023	3-51	07	1	08.6000.4.005	3-25	20	1
00.2751.3.602	3-43	41	1	06.2400.0.621	3-39	12*	1	08.6000.4.005	3-55	12	1
01.1382.0.000	3-15	6	1	06.2400.0.621	3-43	14*	1	08.6000.4.006	3-27	20	1
01.1397.0.000	3-15	11	4	06.2400.2.026	3-71	2	1	08.6000.4.006	3-29	15	2
01.2084.0.000	3-5	10	1	06.2400.2.027	3-65	1	1	08.6000.4.006	3-31	4	2
01.2193.0.000	3-3	2	1	06.8800.0.001	3-47	2	(1)	08.6000.4.010	3-9	1	2
01.2376.0.000	3-5	17	4	07.6045.0.009	3-11	19	2	08.6000.4.010	3-21	7	1
01.2386.0.000	3-7	3	1	07.6045.0.034	3-11	30	1	08.6000.4.012	3-7	7	1
01.5002.0.000	3-67	1	1	07.6045.0.037	3-11	16	2	08.6000.4.014	3-11	45	2
01.6551.0.000	3-3	7	1	07.6045.0.037	3-25	9	1	08.6000.4.014	3-15	25	2
01.6551.0.000	3-21	17	1	07.6045.0.042	3-7	9	1	08.6000.4.014	3-19	8	2
01.7447.1.000	3-3	5	1	07.6045.0.042	3-21	4	1	08.6000.4.014	3-57	7	2
01.7447.1.000	3-21	15	1	07.6045.0.046	3-5	01	2	08.6000.4.016	3-9	3	4
01.7804.0.000	3-3	18	1	07.6045.0.053	3-25	21	1	08.6000.4.016	3-21	10	6
01.7805.0.000	3-3	23	1	07.6045.0.054	3-27	11	1	08.6000.4.016	3-25	42	4
01.7805.0.000	3-27	37	2	07.6321.0.001	3-23	11	1	08.6000.4.025	3-11	32	2
01.7806.0.000	3-25	18	2	07.6321.0.025	3-13	50	2	08.6000.4.070	3-29	07	4
01.7809.0.000	3-3	17	1	07.6321.0.025	3-19	16	2	08.6000.5.008	3-47	19*	(1)*
02.0750.2.100	3-55	27*	—	07.6321.0.029	3-19	13	(2)	08.6000.5.012	3-53	01	2
02.0750.2.109	3-55	28*	—	07.6321.0.030	3-13	61	(1)	08.6000.5.016	3-3	37	1
02.0750.2.110	3-3	32	1	07.6440.0.018	3-11	41	2	08.6000.5.016	3-21	3	1
02.0750.2.110	3-55	07	10	07.6440.0.028	3-11	23	2	08.6000.5.016	3-25	3	4
03.5524.0.022	3-57	1	0	07.6440.0.028	3-19	18	2	08.6000.5.016	3-27	26	3
04.1416.0.003	3-33	8	(1)	07.6440.0.032	3-9	10	1	08.6000.5.020	3-11	15	2
04.1416.0.003	3-35	10	(1)	07.6440.0.033	3-11	8	2	08.6000.6.016	3-3	22	2
04.9000.0.125	3-35	37	(1)	07.6440.0.036	3-15	21	3	08.6000.6.016	3-27	31	2
04.9000.0.225	3-35	36	(1)	07.6440.0.037	3-23	04	2	08.6000.6.025	3-3	31	1
04.9000.0.345	3-35	44	((1))	07.6440.0.040	3-9	16	1	08.6000.6.025	3-19	1	1
04.9000.2.123	3-33	14	1	07.6440.0.041	3-11	11	1	08.6000.6.025	3-25	29	2
04.9024.0.001	3-35	01	1	07.6440.0.045	3-23	27	1	08.6000.6.030	3-3	15	(1)
04.9024.0.002	3-35	20	(1)	07.6440.0.050	3-11	18	1	08.6000.8.025	3-25	7	2
04.9024.0.361	3-35	17	(1)	07.6440.0.051	3-25	10	1	08.6000.8.040	3-25	12	2
04.9024.0.500	3-43	36	1	07.6600.0.004	3-51	03	1	08.6002.2.010	3-61	1	7
04.9024.0.650	3-43	28	1	08.6000.3.004	3-65	2	2	08.6002.3.006	3-69	1	10
04.9024.0.652	3-39	24	1	08.6000.3.005	3-65	3	2	08.6002.3.008	3-59	1	2
04.9024.0.900	3-35	09	(1)	08.6000.3.006	3-21	29	1	08.6002.3.008	3-67	2	2
04.9024.0.951	3-39	11*	(1)*	08.6000.3.006	3-27	15	1	08.6002.3.012	3-67	3	1
04.9024.0.951	3-43	13*	(1)*	08.6000.3.006	3-31	11	1	08.6002.3.012	3-71	5	1
05.1322.0.000	3-55	08	1	08.6000.3.010	3-11	38	1	08.6002.3.014	3-67	4	5
05.1394.0.000	3-27	05	1	08.6000.3.010	3-15	17	1	08.6002.3.014	3-71	6	1
06.2400.0.008	3-41	*	1	08.6000.3.010	3-19	6	1	08.6002.3.016	3-67	5	1
06.2400.0.009	3-39	13	1	08.6000.3.016	3-29	09	4	08.6002.3.020	3-67	6	1
06.2400.0.010	3-39	7	1	08.6000.3.040	3-29	08	1	08.6002.3.035	3-67	7	1
06.2400.0.012	3-39	6	1	08.6000.4.005	3-9	5	4	08.6002.4.008	3-65	4	2

INDEX

PART NUMBER	PAGE	DET	QTY	PART NUMBER	PAGE	DET	QTY	PART NUMBER	PAGE	DET	QTY
08.6002.4.010	3-59	2	4	08.6200.5.008	3-25	5	1	08.6412.5.020	3-67	12	1
08.6002.4.012	3-65	5	2	08.6200.5.010	3-57	23	2	08.6532.8.050	3-33	18	(4)
08.6002.4.012	3-69	2	1	08.6200.5.012	3-17	03	6	08.6652.3.016	3-33	23	(2)
08.6002.4.014	3-63	1	1	08.6200.5.014	3-17	07*	1*	08.6652.3.016	3-35	14	(2)
08.6002.5.012	3-5	07	1	08.6200.5.020	3-17	14	1	08.6662.3.006	3-53	14	2
08.6002.5.022	3-5	05	4	08.6202.3.005	3-67	10	1	08.6663.5.025	3-33	12	10
08.6002.5.025	3-67	8	2	08.6202.4.008	3-65	8	1	08.6663.5.025	3-35	19	(11)
08.6002.6.008	3-5	30	2	08.6202.4.010	3-65	9	1	08.6663.5.025	3-51	06	2
08.6012.4.010	3-17	11	1	08.6202.6.012	3-57	14	2	08.6663.5.025	3-67	13	4
08.6012.4.010	3-35	22	((1))	08.6215.4.006	3-39	43	2	08.6676.3.020	3-35	08	(17)
08.6032.4.008	3-51	05	1	08.6215.4.006	3-45	44	2	08.6676.3.020	3-57	16	4
08.6032.4.010	3-39	33	(6)	08.6312.0.020	3-35	26	((12))	08.6683.4.007	3-47	15	1
08.6032.4.010	3-43	37	(6)	08.6312.6.016	3-61	2	1	08.6683.4.007	3-53	16	2
08.6100.3.006	3-59	3	4	08.6312.6.020	3-35	32	((1))	08.6700.4.000	3-7	11	1
08.6100.3.008	3-19	5	2	08.6312.8.020	3-35	39	((4)+(4)+4))	08.6700.5.000	3-17	09	2
08.6100.3.008	3-27	21	1	08.6312.8.020	3-47	5	(2)	08.6700.5.000	3-19	24	2
08.6100.3.030	3-11	1	2	08.6312.8.020	3-71	8	2	08.6700.5.000	3-23	19	1
08.6100.4.006	3-9	21	3	08.6312.8.025	3-35	25	((4))	08.6700.5.000	3-25	34	3
08.6100.4.006	3-27	08	2	08.6312.8.060	3-37	01	16	08.6700.5.000	3-25	38	1
08.6100.4.010	3-39	17	4	08.6400.3.004	3-27	23	1	08.6700.5.000	3-53	06	2
08.6100.4.010	3-43	21	4	08.6400.3.005	3-3	12	4	08.6700.8.000	3-13	57	1
08.6100.4.012	3-23	15	1	08.6400.4.004	3-3	21	2 (2)	08.6700.8.000	3-15	33	1
08.6100.4.012	3-47	8	(4)	08.6400.4.004	3-15	1	2	08.6700.8.000	3-33	02	(4)
08.6100.4.014	3-43	34	1	08.6400.4.004	3-19	27	1	08.6700.8.000	3-35	02	(8)
08.6100.4.020	3-39	30	8	08.6400.4.004	3-21	26	1	08.6702.4.000	3-5	22	1
08.6100.5.010	3-23	09	1	08.6400.4.004	3-57	6	2	08.6702.4.000	3-45	46	8
08.6100.5.012	3-5	14	2	08.6400.4.005	3-9	22	1	08.6702.4.000	3-65	10	1
08.6100.5.012	3-17	02	5	08.6400.4.005	3-11	28	6	08.6702.6.000	3-57	10	1
08.6100.5.012	3-17	02*	2*	08.6400.4.005	3-19	20	1	08.6702.8.000	3-33	20	(4)
08.6100.5.016	3-29	01	7	08.6400.5.005	3-3	4	1	08.6702.8.000	3-35	41	(4)
08.6100.5.020	3-15	4	2	08.6400.5.005	3-11	33	1	08.6702.8.000	3-37	02	16
08.6100.5.020	3-17	07	1	08.6400.5.005	3-25	27	2	08.6702.8.000	3-47	10	(2)
08.6100.5.020	3-25	26	3	08.6400.5.005	3-27	12	2	08.6702.8.000	3-71	10	2
08.6100.5.020	3-25	37	1	08.6400.5.008	3-25	28	2	08.6710.5.000	3-13	52	2
08.6100.6.035	3-27	17	1	08.6400.5.010	3-25	17	1	08.6710.5.000	3-15	23	2
08.6102.3.006	3-67	9	4	08.6400.5.010	3-27	13	2	08.6710.6.000	3-21	1	1
08.6102.3.008	3-39	4	2	08.6400.5.305	3-11	13	4	08.6712.3.000	3-5	26	2
08.6102.3.008	3-43	4	2	08.6400.5.305	3-27	33	6	08.6712.5.000	3-67	14	1
08.6102.4.006	3-63	2	2	08.6402.3.006	3-5	27	2	08.6733.3.000	3-11	24	2
08.6102.4.012	3-63	3	2	08.6402.4.004	3-5	08	2	08.6742.8.000	3-33	10	(4)
08.6102.5.008	3-65	6	1	08.6402.4.004	3-69	3	2	08.6752.8.000	3-33	21	(4)
08.6102.5.012	3-65	7	1	08.6402.4.006	3-67	11	1	08.6800.4.000	3-11	43	2
08.6120.3.008	3-27	03	7	08.6402.4.012	3-5	21	1	08.6800.4.000	3-15	26	2
08.6200.4.008	3-29	17	2	08.6402.5.005	3-61	3	3	08.6800.4.000	3-21	19	2
08.6200.4.016	3-21	22	2	08.6402.5.008	3-5	18	1	08.6802.3.000	3-71	4	2

Revised: 06/2023
E-mail: info@amfreece-cars.cz

INDEX

PART NUMBER	PAGE	DET	QTY	PART NUMBER	PAGE	DET	QTY	PART NUMBER	PAGE	DET	QTY
08.6802.4.000	3-39	21	4	08.6852.8.000	3-37	04	16	12.0008.4.058	3-53	11	3
08.6802.4.000	3-43	25	4	08.6852.8.000	3-47	6	(4)	12.0008.4.072	3-25	13	10
08.6802.6.000	3-35	31	((1))	08.6852.8.000	3-71	7	4	12.0008.4.072	3-47	12	(2)
08.6802.8.000	3-35	15	(4)+((4))	08.6882.0.000	3-35	27	((12))	12.0008.4.072	3-57	15	5
08.6802.8.000	3-37	03	16	08.6887.5.000	3-9	17	1	12.0008.4.100	3-25	40	1
08.6802.8.000	3-47	9	(2)	08.6887.6.500	3-67	17	1	12.0008.4.155	3-43	40	1
08.6802.8.000	3-71	9	2	08.6887.8.000	3-65	12	3	12.0008.4.197	3-17	08	2
08.6832.0.000	3-35	28	((8+2+2))	08.6962.4.025	3-39	10*	(1)*	12.0008.4.207	3-39	18	7
08.6832.4.000	3-17	12	1	08.6962.4.025	3-43	12*	(1)*	12.0008.4.207	3-43	22	7
08.6832.4.000	3-35	24	((1))	12.0008.3.023	3-17	15	1	12.0008.4.214	3-47	16	(1)
08.6832.4.000	3-51	04	1	12.0008.3.023	3-31	14	1	12.0008.4.215	3-43	8	4
08.6832.5.000	3-53	02	2	12.0008.3.023	3-33	17	(1)	12.0008.4.231	3-39	20	1
08.6832.6.000	3-35	29	((1))	12.0008.3.023	3-35	12	(1)	12.0008.4.231	3-43	24	3
08.6832.8.000	3-35	38	((2)+(2))	12.0008.3.023	3-53	12	3	12.0008.4.279	3-47	18*	(1)*
08.6842.5.000	3-67	15	6	12.0008.3.081	3-55	20*	1	12.0008.4.280	3-47	13	1
08.6850.3.000	3-21	27	1	12.0008.3.251	3-55	19	1	12.0008.4.280	3-53	18	2
08.6850.3.000	3-65	11	2	12.0008.3.411	3-65	13	1	12.0008.4.296	3-47	3	(1)
08.6850.4.000	3-21	18	2	12.0008.3.412	3-53	30	1	12.0008.4.366	3-39	23	2
08.6850.4.000	3-25	41	4	12.0008.3.413	3-53	25	1	12.0008.4.366	3-43	27	1
08.6850.4.000	3-27	19	1	12.0008.3.418	3-53	17	1	12.0008.4.366	3-51	09	1
08.6850.4.000	3-55	11	1	12.0008.3.420	3-53	07	1	12.0008.4.378	3-39	39	1
08.6850.5.000	3-23	20	1	12.0008.3.426	3-65	14	1	12.0008.4.472	3-39	31	2
08.6850.5.000	3-25	2	3	12.0008.3.433	3-53	27	1	12.0008.4.472	3-43	35	2
08.6850.5.000	3-27	25	2	12.0008.3.437	3-53	34	1	12.0008.4.563	3-43	2	1
08.6850.5.000	3-29	04	4	12.0008.3.463	3-55	26*	—	12.0008.4.570	3-39	01	1
08.6850.5.000	3-53	05	2	12.0008.3.464	3-55	22*	—	12.0008.4.570	3-43	01	2
08.6850.5.000	3-57	22	2	12.0008.3.465	3-55	25*	—	12.0008.4.598	3-25	35	1
08.6850.6.000	3-9	11	1	12.0008.3.466	3-55	23*	—	12.0008.4.632	3-17	16*	1*
08.6850.6.000	3-25	30	2	12.0008.3.467	3-55	24*	—	12.0008.4.657	3-57	19	1
08.6850.8.000	3-13	56	1	12.0008.3.498	3-65	15	1	12.0008.4.661	3-57	18	1
08.6850.8.000	3-15	32	1	12.0008.3.607	3-55	01*	1*	12.0008.4.664	3-49	11	1
08.6852.3.000	3-67	16	1	12.0008.3.608	3-55	02	1	12.0008.4.665	3-49	10	1
08.6852.3.000	3-71	3	2	12.0008.3.828	3-53	13	3	12.0008.4.710	3-39	8	1
08.6852.4.000	3-35	23	((1))	12.0008.3.828	3-65	16	1	12.0008.4.710	3-43	10	1
08.6852.4.000	3-39	22	4	12.0008.3.829	3-53	09	1	12.0008.4.713	3-43	23	1
08.6852.4.000	3-43	26	4	12.0008.3.830	3-53	15	1	12.0008.4.777	3-33	24	1**
08.6852.4.000	3-47	14	1	12.0008.3.831	3-53	21	1	12.0008.4.777	3-35	06	(1)
08.6852.4.000	3-63	4	1	12.0008.3.832	3-53	20	1	12.0008.4.777	3-41	46	1
08.6852.5.000	3-35	18	(11)	12.0008.3.833	3-47	17	1	12.0008.4.777	3-43	7	1
08.6852.6.000	3-7	13	1	12.0008.4.050	3-49	8	1	12.0008.4.833	3-49	12	1
08.6852.6.000	3-35	30	((1))	12.0008.4.052	3-17	10	1	12.0008.4.835	3-39	27	1
08.6852.6.000	3-57	9	1	12.0008.4.052	3-35	21	((1))	12.0008.4.835	3-43	31	1
08.6852.6.000	3-61	4	2	12.0008.4.058	3-33	22	(1)	12.0008.4.861	3-39	26	1
08.6852.8.000	3-33	19	(4)	12.0008.4.058	3-35	13	(1)	12.0008.4.861	3-43	30	1
08.6852.8.000	3-35	16	(4)+(4)+((4))	12.0008.4.058	3-47	11	(2)	12.0008.4.862	3-71	11	4

INDEX

PART NUMBER	PAGE	DET	QTY	PART NUMBER	PAGE	DET	QTY	PART NUMBER	PAGE	DET	QTY
12.0008.4.863	3-39	25	1	12.0010.4.191	3-39	2	1	17.0082.8.017	3-3	35	2
12.0008.4.863	3-43	29	1	12.0010.4.390	3-39	09*	(1)*	17.0082.8.082	3-25	23	1
12.0008.4.885	3-39	19	1	12.0010.4.390	3-43	11*	(1)*	17.0094.0.200	3-33	13	(4)
12.0008.6.001	3-55	09	1	12.1010.2.003	3-25	33	1	17.0094.5.310	3-31	12	1
12.0008.6.100	3-55	17	1	12.1010.2.052	3-61	5	1	17.0095.1.272	3-33	04	(4)
12.0008.6.101	3-55	15	1	12.1010.2.053	3-67	18	1	17.0095.1.272	3-35	04	(4)
12.0008.6.102	3-55	14	1	12.1011.0.001	3-25	36	1	17.0095.1.329	3-31	7	1
12.0008.6.105	3-55	18	1	12.1014.0.004	3-65	18	1	20.0092.0.004	3-7	2	1
12.0008.6.109	3-55	13	1	12.1014.0.314	3-67	19	3	20.0093.2.004	3-7	1	1
12.0008.6.112	3-55	16	1	12.1016.0.000	3-35	34	((2))	20.0094.0.000	3-15	7	1
12.0008.6.527	3-37	05	2	12.1016.1.000	3-33	7	(6)	20.0094.0.000	3-55	03	1
12.0008.6.528	3-37	06	2	12.1016.1.000	3-35	11	(2)	20.0111.0.000	3-15	8	1
12.0008.6.800	3-19	23	1	12.1045.0.004	3-67	20	1	20.0112.0.000	3-15	10	1
12.0008.6.801	3-33	06	(4)	12.1045.2.001	3-3	29	1	22.0006.0.000	3-27	34	1
12.0008.6.801	3-35	05	(4)	12.1045.2.001	3-27	36	1	22.0008.0.000	3-19	2	1
12.0008.6.813	3-35	33	((3))	12.1045.3.001	3-7	4	1	22.0009.0.000	3-19	12	(1)
12.0008.6.900	3-33	05	(1)	12.2010.1.002	3-15	14	2	22.0009.0.050	3-19	28	1
12.0008.6.901	3-33	15	(1)	12.2050.0.003	3-3	20	1	22.0020.0.000	3-19	22	1
12.0008.6.901	3-35	43	(1)	12.2050.0.005	3-27	30	1	22.0021.0.000	3-13	47	1
12.0008.6.964	3-35	40	((4))	12.2070.1.012	3-59	4	1	22.0021.0.000	3-15	27	1
12.0008.6.965	3-35	42	(1)	12.2070.1.075	3-61	6	1	22.0022.0.000	3-13	55	1
12.0008.6.981	3-57	20	1	12.2070.1.076	3-61	7	1	22.0022.0.000	3-15	31	1
12.0008.6.982	3-57	5	2	12.2085.0.005	3-67	21	1	22.0023.0.000	3-15	28	1
12.0010.3.027	3-53	26	3	12.4030.0.002	3-27	27	1	22.0024.0.000	3-15	22	1
12.0010.3.028	3-53	29	4	12.5050.2.009	3-25	15	1	22.0026.0.000	3-11	40	1
12.0010.3.029	3-53	23	1	12.8000.0.016	3-53	10	1	22.0027.0.000	3-19	19	1
12.0010.3.030	3-53	08	1	12.8000.0.040	3-39	29	1	22.0028.0.000	3-19	17	2
12.0010.3.032	3-53	19	1	12.8000.0.040	3-43	33	1	22.0029.0.000	3-19	15	2
12.0010.3.080	3-65	17	1	12.8000.0.041	3-39	28	1	22.0030.0.000	3-19	26	1
12.0010.3.137	3-53	04	1	12.8000.0.041	3-43	32	1	22.0031.0.000	3-13	51	2
12.0010.3.138	3-53	03	1	12.8000.0.047	3-39	3	1	22.0031.0.000	3-15	15	2
12.0010.3.159	3-53	24	1	12.8000.0.047	3-43	3	1	22.0032.0.000	3-13	49	2
12.0010.4.052	3-57	13	2	12.8000.0.112	3-41	44	1	22.0046.0.000	3-21	16	1
12.0010.4.067	3-49	7	1	12.8000.0.151	3-39	35	1	22.0049.0.000	3-11	31	1
12.0010.4.071	3-49	5	0	12.8000.0.151	3-43	39	1	22.0054.0.000	3-25	6	1
12.0010.4.078	3-49	9	1	12.8000.1.028	3-17	06	1	22.0057.0.000	3-29	14	1
12.0010.4.142	3-57	3	1	17.0019.0.441	3-33	03	(4)	22.0058.0.000	3-25	8	1
12.0010.4.143	3-57	2	2	17.0019.0.441	3-35	03	(4)	22.0061.0.000	3-11	7	1
12.0010.4.168	3-49	13	1	17.0019.0.517	3-11	37	1	22.0062.0.000	3-25	11	1
12.0010.4.177	3-39	14	1	17.0019.2.057	3-11	25	1	22.0063.0.000	3-19	4	1
12.0010.4.177	3-43	17	1	17.0026.2.077	3-3	34	1	22.0064.0.000	3-15	16	1
12.0010.4.178	3-39	15	1	17.0027.1.799	3-31	9	1	22.0064.0.000	3-19	14	2
12.0010.4.178	3-43	18	1	17.0031.0.460	3-5	25	2	22.0069.0.000	3-19	21	1
12.0010.4.179	3-39	16	1	17.0081.6.225	3-35	35	((1))	22.0091.0.000	3-21	24	1
12.0010.4.179	3-43	20	1	17.0082.6.000	3-31	10	1	22.0097.0.000	3-23	13	1

Revised: 06/2023
E-mail: info@amfreece-cars.cz

INDEX

PART NUMBER	PAGE	DET	QTY	PART NUMBER	PAGE	DET	QTY	PART NUMBER	PAGE	DET	QTY
22.0100.0.000	3-11	34	4	22.0305.0.000	3-11	35	1	22.2652.0.000	3-9	4	1
22.0100.0.000	3-15	20	3	22.0309.0.000	3-11	20	(1)	22.2653.0.000	3-9	2	1
22.0100.0.000	3-19	11	4	22.0309.0.050	3-13	59	1	22.2655.0.000	3-9	18	1
22.0104.0.000	3-31	6	1	22.0312.0.000	3-11	6	1	22.2656.0.000	3-9	7	1
22.0105.0.000	3-15	29	1	22.0313.0.000	3-11	17	(1)	22.2657.0.000	3-9	6	1
22.0106.0.000	3-23	25	2	22.0315.0.000	3-11	22	1	22.2664.0.000	3-9	24	1
22.0107.0.000	3-31	13	1	22.0320.0.000	3-11	36	1	22.2665.0.000	3-9	19	1
22.0108.0.000	3-31	8	1	22.0325.0.000	3-11	10	1	22.3003.0.000	3-23	28	1
22.0110.0.000	3-13	54	1	22.0336.0.000	3-11	44	1	22.3022.0.000	3-27	07	1
22.0110.0.000	3-19	9	1	22.0353.0.000	3-13	48	3	22.3029.0.000	3-5	28	2
22.0114.0.000	3-11	2	1	22.0354.0.000	3-11	4	1	22.3034.0.000	3-5	15	1
22.0115.0.000	3-27	43	1	22.0370.0.000	3-11	46	1	22.3064.0.000	3-27	44	2
22.0120.0.000	3-31	5	1	22.0400.0.000	3-9	23	1	22.3068.0.000	3-27	01	8
22.0121.0.000	3-11	3	1	22.0405.0.000	3-9	14	1	22.3069.0.000	3-23	07	1
22.0137.0.000	3-23	10	2	22.0408.1.000	3-27	09	1	22.6002.0.000	3-25	25	1
22.0143.0.000	3-27	06	4	22.0520.0.000	3-3	6	1	22.8400.0.000	3-27	39	1
22.0153.0.000	3-27	38	2	22.0525.0.000	3-3	16	(1)	23.2106.0.000	3-15	9	1
22.0159.0.000	3-5	20	1	22.0525.0.050	3-3	24	1	23.2107.0.000	3-15	12	1
22.0161.0.000	3-21	23	1	22.0530.0.000	3-3	10	1	24.0001.0.000	3-3	33	1
22.0164.0.000	3-5	16	1	22.0535.0.100	3-3	30	1	24.0002.0.000	3-3	28	1
22.0173.0.000	3-5	02	2	22.0540.0.000	3-3	14	1	24.0002.0.000	3-27	32	1
22.0175.0.000	3-3	27	1	22.0541.0.000	3-3	13	1	24.0003.0.000	3-7	6	1
22.0182.0.000	3-23	12	2	22.0542.0.000	3-3	11	1	24.0004.0.000	3-7	8	1
22.0183.0.000	3-11	39	1	22.0545.0.000	3-3	25	1	24.0005.0.000	3-7	10	1
22.0183.0.000	3-15	18	1	22.0545.0.000	3-27	41	1	24.0006.1.000	3-7	14	1
22.0183.0.000	3-19	7	1	22.1010.0.000	3-17	04	2	24.0009.0.000	3-21	9	1
22.0184.0.000	3-11	21	3	22.1415.0.050	3-21	11	1	24.0010.0.000	3-21	8	1
22.0186.0.000	3-11	27	1	22.1422.0.000	3-25	22	1	24.0011.0.000	3-21	5	1
22.0195.0.000	3-3	1	1	22.1436.0.000	3-21	14	2	24.0014.0.000	3-21	6	1
22.0208.0.000	3-11	26	1	22.2410.0.000	3-15	3	1	24.0016.0.000	3-25	32	1
22.0209.0.000	3-55	04	1	22.2425.0.050	3-15	19	1	24.0018.0.000	3-27	14	1
22.0213.0.000	3-55	10	1	22.2440.0.000	3-15	5	2	24.0019.0.000	3-27	29	1
22.0214.0.000	3-19	10	1	22.2442.0.000	3-15	2	2	24.0020.0.000	3-27	24	1
22.0219.0.000	3-33	16	1	22.2607.0.000	3-23	01	1	24.0024.0.000	3-55	06	1
22.0219.0.000	3-35	45	1	22.2610.0.000	3-23	14	1	24.0027.0.000	3-27	42	1
22.0223.0.000	3-5	24	1	22.2626.0.000	3-23	03	1	24.0030.0.000	3-55	05	1
22.0224.0.000	3-5	23	1	22.2627.0.000	3-23	02	2	24.0033.0.000	3-19	25	1
22.0228.0.000	3-11	12	1	22.2631.0.000	3-23	24	1	24.0035.1.000	3-5	06	1
22.0229.0.000	3-31	3	2	22.2633.0.000	3-23	23	1	24.0036.1.000	3-5	03	1
22.0230.0.000	3-3	8	2	22.2635.0.000	3-23	16	1	24.0037.0.000	3-21	2	1
22.0232.0.000	3-13	53	1	22.2637.0.000	3-23	22	1	24.0038.0.000	3-17	05	1
22.0232.0.000	3-15	24	1	22.2638.0.000	3-23	17	1	24.0039.1.000	3-21	13	1
22.0233.0.000	3-15	30	1	22.2639.0.000	3-23	18	1	24.0044.0.000	3-25	19	1
22.0239.0.000	3-3	9	2	22.2640.0.050	3-23	26	1	24.0048.0.000	3-3	26	1
22.0300.0.000	3-27	40	1	22.2651.0.000	3-9	15	1	24.0049.0.000	3-11	14	2

INDEX

PART NUMBER	PAGE	DET	QTY	PART NUMBER	PAGE	DET	QTY	PART NUMBER	PAGE	DET	QTY
24.0050.1.000	3-53	31	1								
24.0051.0.066	3-27	16	1					24.4016.0.000	3-65	29	1
24.0055.0.000	3-19	3	1	24.0170.0.000	3-37	07	3	24.4017.0.000	3-65	30	1
24.0059.9.017	3-39	34	1	24.0171.0.000	3-37	08	1	24.4018.0.000	3-5	29*	1*
24.0059.9.017	3-43	38	1	24.0196.0.000	3-27	18	1	24.4026.1.000	3-59	5	1
24.0059.9.069	3-41	45	1	24.0198.0.000	3-51	01	1	24.4027.0.000	3-59	6	1
24.0059.9.069	3-45	45	1	24.0351.0.000	3-11	9	1	24.4028.1.000	3-23	29*	1*
24.0061.0.000	3-21	28	1	24.0500.0.000	3-3	19	1	24.4028.1.000	3-59	7	1
24.0062.0.000	3-21	21	1	24.0510.0.000	3-3	3	1	24.4087.0.000	3-59	8	2
24.0063.0.000	3-21	25	1	24.0546.0.000	3-25	39	1	24.4103.0.000	3-63	5	1
24.0066.0.000	3-15	13	2	24.1000.0.000	3-27	28	1	24.4401.0.000	3-67	22	1
24.0067.0.000	3-29	03	1	24.1430.1.000	3-21	20	1	24.4402.0.000	3-67	23	1
24.0068.0.000	3-29	02	1	24.2035.0.000	3-11	29	1	24.4403.0.000	3-67	24	1
24.0069.9.003	3-47	4	(1)	24.2400.0.000	3-27	35	1	24.4404.0.000	3-67	25	1
24.0069.9.004	3-43	9	1	24.2630.1.000	3-23	21	1	24.4405.0.000	3-67	26	1
24.0069.9.006	3-43	16	1	24.3026.0.000	3-5	19	1	24.4406.0.000	3-69	4	1
24.0069.9.009	3-47	1	1	24.3028.1.000	3-5	12	1	24.4407.0.000	3-69	5	1
24.0069.9.023	3-43	6	1	24.3054.0.000	3-27	02	2	24.4408.0.000	3-69	6	1
24.0069.9.027	3-43	15	1	24.3055.0.000	3-27	04	1	24.4409.0.000	3-69	7	1
24.0069.9.038	3-47	01*	1*	24.3070.0.000	3-23	06	1	24.4410.0.000	3-69	8	1
24.0069.9.040	3-35	07	(1)	24.3071.0.000	3-9	20	1	24.4411.0.000	3-69	9	1
24.0069.9.047	3-57	17	1	24.3072.0.000	3-9	13	1	24.4412.0.000	3-69	10	1
24.0069.9.063	3-33	11	1	24.3073.0.000	3-9	9	1	24.4413.0.000	3-69	11	1
24.0069.9.306	3-47	04*	(1)*	24.3074.0.000	3-9	8	2	24.4414.0.000	3-69	14	1
24.0080.0.000	3-7	5	1	24.3075.0.000	3-9	12	1	24.4415.0.000	3-69	15	1
24.0097.0.000	3-47	7	(1)	24.3076.0.000	3-23	05	1	24.4416.0.000	3-69	16	1
24.0097.0.000	3-71	1	1	24.3077.0.000	3-23	08	1	24.4417.0.000	3-69	12	1
24.0100.0.000	3-3	36	1	24.3079.0.000	3-55	29*	—	24.4418.0.000	3-61	8	1
24.0106.1.000	3-25	31	1	24.3080.0.000	3-55	30*	—	24.4419.0.000	3-61	9	1
24.0108.0.000	3-25	16	1	24.3081.0.000	3-27	04*	1*	24.4420.0.000	3-63	6	1
24.0111.0.000	3-17	01	1	24.3082.0.000	3-57	8	1	24.4421.0.000	3-63	7	1
24.0112.0.000	3-29	11	1	24.3083.0.000	3-57	11	1	24.4422.0.000	3-67	27	1
24.0119.0.050	3-25	24	1	24.3084.0.000	3-57	4	1	24.4423.0.000	3-67	28	1
24.0126.0.000	3-11	5	1	24.3085.0.000	3-27	45*	1*	24.4424.0.000	3-69	13	1
24.0127.0.000	3-11	42	1	24.3090.0.000	3-57	12	1	24.4425.0.000	3-67	29	1
24.0139.0.000	3-31	2	1	24.3091.0.000	3-57	21	1	24.4426.0.000	3-59	9	1
24.0140.0.000	3-13	60	1	24.4005.0.000	3-65	19	1	24.4427.0.000	3-67	30	2
24.0141.0.000	3-31	1	1	24.4006.0.000	3-65	20	1	24.4428.0.000	3-65	31	1
24.0142.0.000	3-33	9	(1)	24.4007.0.000	3-65	21	1	24.4429.0.000	3-67	31	1
24.0142.0.050	3-33	01	1	24.4008.0.000	3-65	22	1	24.6000.5.000	3-25	4	1
24.0145.1.000	3-53	32	1	24.4009.0.000	3-65	23	1	24.6001.7.000	3-29	10	1
24.0148.0.000	3-39	5	1	24.4010.0.000	3-65	24	1	24.6003.0.000	3-29	13	1
24.0148.0.000	3-43	5	1	24.4011.0.000	3-65	25	1	24.6004.7.000	3-29	06	1
24.0154.0.000	3-29	16	1	24.4013.0.000	3-65	26	1	24.6005.1.002	3-17	13	1
24.0155.0.000	3-17	04*	2*	24.4014.0.000	3-65	27	1	24.6100.1.000	3-27	10	1
24.0158.1.000	3-5	09	1	24.4015.0.000	3-65	28	1	24.8001.2.001	3-49	6	1

Revised: 05/2024
E-mail: info@amfreece-cars.cz

INDEX

PART NUMBER	PAGE	DET	QTY	PART NUMBER	PAGE	DET	QTY	PART NUMBER	PAGE	DET	QTY
24.8001.2.005	3-49	4	0								
24.8001.2.023	3-51	02	1								
70.4165.1.125	3-39	32	1								

INDEX

Revised: 06/2023
E-mail: info@amfreece-cars.cz